GCOS OPERATOR TRAINING

(WWMCCS)

STUDENT HANDBOOK

COURSE CODE: E1ASC49151-000/-003
DATE ISSUED: DECEMBER, 1987
DATE REVISED:
SOFTWARE RELEASE: GCOS 8

HONEYWELL FEDERAL SYSTEMS
EDUCATION DEPARTMENT

Copyright (c) Honeywell Federal Systems, Inc.

The information contained herein is the exclusive property of Honeywell Federal Systems, Inc., except as otherwise indicated, and shall not be disclosed or reproduced, in whole or in part, without explicit written authorization from the company. The distribution of this material outside the company may occur only as authorized.

Printed in the United States of America
All rights reserved

PREFACE

This student handbook supplements the classroom presentation of the course, giving the students access to copies of visuals, examples, and reference material. These aids permit the student to concentrate on the subject matter covered in class and may be used as reference material following completion of the course.

COURSE DESCRIPTION

DURATION: Fifteen days

INTENDED FOR: WWMCCS H6000 DPS Computer Operations Personnel

SYNOPSIS: This course is intended for WWMCCS computer operations personnel who require knowledge of the H6000 DPS Hardware, Remote Terminal Interface, and the relationship between hardware and software; startup procedures; system reconfiguration and maintenance of startup decks/tapes.

OBJECTIVES: Upon completion of this course, each student will be able to:

1. Operate the H6000 DPS computer and associated peripheral equipment, Visual Information Projection (VIP) devices, and remote line printers.
2. Interface with the General Comprehensive Operating Supervisor (GCOS) through the system console.
3. Perform routine preventive maintenance on the H6000 DPS peripheral equipment.
4. Initiate and monitor the progress of each program through the phases of job flow and understand the impact of each phase on the total job.
5. Maintain the startup-deck.
6. Reconfigure and bootload the system using both warm and cold booting procedures.
7. Perform total, incremental and since saves/restores.
8. Initiate and interact with Honeywell's on-line diagnostic software.
9. Utilize and monitor the WWMCCS Intercomputer Network.

PREREQUISITES: Six (6) months computer operations experience.

GCOS OPERATOR TRAINING

GENERAL COURSE OUTLINE

I. HARDWARE/SOFTWARE OVERVIEW

- A. Hardware/Software Concepts
- B. Series 6000 Family
- C. H6000 DPS Family
- D. Free Standing Basic Configuration
- E. Functional Modularity
- F. Processor
  1. Function
  2. Three Modes of Operation
  3. CACHE Buffer
  4. Key CACHE Features
  5. Extended Instruction Set
  6. Instruction Overlap
- G. System Controller
  1. Availability
  2. Logical Memory Addressing
  3. Extended Memory
  4. Extended Memory Access
  5. H6000 DPS Memory Interface
- H. Input/Output Multiplexer Module
  1. IOM Rule
  2. IOM Architecture
  3. Physical and Logical Channel Relationships
  4. Availability Features
  5. IOM Benefits
- I. Peripherals
  1. Unit Record Devices
  2. Magnetic Tape Subsystem Characteristics
  3. Mass Storage Subsystem Characteristics
  4. Through Features for Disk Subsystems
  5. Mass Storage Availability Features
  6. MSU400 Throughput Optimizing
  7. Mass Storage Configuration
- J. Page Printing System
- K. Time Sharing System
  1. Front-end Network
  2. DN-355 Front-end Network Processor
  3. DCU 6661/6678
     a. Communication Hardware

GCOS OPERATOR TRAINING

GENERAL COURSE OUTLINE (Cont'd.)

L. Introduction To GCOS
    1. Benefits of GCOS
    2. Vocabulary
    3. Virtual Memory
    4. Segment-Oriented Modes
    5. Security Protection Features
    6. GCOS Means Throughput
    7. Multiprogramming/Multiprocessing
    8. GCOS Common File System
M. File Management System
N. Time Sharing System
O. Transaction Processing System
P. Reliability/Availability Aids

II. PERIPHERAL OPERATION

A. Unit Record Devices
    1. Card Punch PCU0121
    2. Card Reader/Punch CCU0401/0402
    3. CRU0600/CRU1050 Card Readers
    4. Printers PRU1200/1600/0901/1201
B. Tape Subsystem
    1. MTP Driven (MTU400/0500/0600)
        a. Alert Conditions
        b. Tape Handling and Storage
C. Mass Storage
    1. MSU0402/0451 Mass Storage Subsystem
    2. MSU0500/0501 Mass Storage Subsystem
D. Consoles
    1. CSU6001 Free-standing Console
    2. CSU6004 (ABI) Console
    3. CSU6005 System Control Center
    4. CSU6601 System Console
    5. VIDEO and VIP Interface with System Console
E. Manual Peripheral Switch
F. Peripheral Maintenance
    1. Punch Card Equipment
    2. Printers
    3. Magnetic Tape Units
    4. Mass Storage Devices

III. H6000 CONSOLE SIMULATOR

A. Teletype Writers (TTY)
B. TTY Log-On/Log-Off Example
C. Visual Information Projection (VIP)
D. VIP Log-On/Log-Off Example

GENERAL COURSE OUTLINE (Cont'd.)

IV. CONSOLE MESSAGES (HARDWARE) WWMCCS UNIQUE

- A. General Rules for Input Messages
- B. General Rules for Output Messages
- C. Hardware Verbs
- D. Miscellaneous Verbs
- E. Datanet Verbs
- F. TSS Verbs
- G. TP Verbs

V. JOB CONTROL LANGUAGE (JCL) OVERVIEW AND GCOS JOB FLOW

- A. Usage
- B. Job Definers
- C. Activity Definers
- D. Resource Requests
- E. Miscellaneous
- F. Formats
- G. File code and LUD
- H. GCOS Job Flow
  1. Input
  2. Scheduler
  3. Allocation
  4. Execution
  5. Termination
  6. Output

VI. BATCH CONSOLE EDITOR (JCLGEN)

- A. Usage
- B. Conditions and Restrictions
- C. Commands
  1. Access Files
  2. Search and Print Buffer
  3. Change Buffer Contents
  4. Control Editor

VII. CONSOLE MESSAGES (JOB FLOW)

- A. Input Phase
- B. Scheduler Phase
- C. Allocation Phase
  1. Peripheral
  2. Memory
- D. Execution Phase
- E. Termination Phase
- F. Output Phase

GCOS OPERATOR TRAINING

GENERAL COURSE OUTLINE (Cont'd.)

VIII. STARTUP AND BOOTLOADS

- A. Overview
- B. Configuration Section
- C. Initialize Section
- D. Edit Section
- E. Files Section
- F. Patch Section
- G. Load Section
- H. IOM Channel Configuration
- I. Shared Mass Storage
- J. Firmware
- K. System Bootload
  - 1. Startup Program
  - 2. Booting
  - 3. When
  - 4. With What
  - 5. How

IX. SWITCH SETTINGS AND RECONFIGURATION

- A. Mainframe Door Panel
- B. System Controller
- C. Input/Output Multiplexer
- D. Processor
- E. Datanet 355
- F. Dynamic Reconfiguration
- G. Releasing/Assigning Memory
- H. Processor Release
  - 1. Non-Control
  - 2. Control
- I. Processor Assignment
- J. IOM Release/Assignment

X. STARTUP CONSOLE EDITOR

- A. Usage
- B. Commands
- C. Conditions and Restrictions

XI. HARDWARE RELIABILITY AIDS

- A. TOLTS
- B. TOLTS Initiation

C. TOLTS Subsystem
    1. Hardware Reliability Aids
    2. COLTS
    3. SOLTS
    4. MOLTS
    5. POLTS
D. ELAN
    1. Files
    2. ELAN Summary
    3. Input Console Verbs

XII. WWMCCS INTERCOMPUTER NETWORK (WIN)

A. Background
B. Terminology
C. Concepts
D. Packet Switching
E. Network Configuration
F. Security
G. WIN Software
H. WIN Operator Messages

XIII. FILE MANAGEMENT SYSTEM (FMS)

A. Overview and Concepts
B. File System Structure
C. FMS Saves
D. Types of Saves
    1. Total example
    2. Range
    3. Range example
    4. DONTDO example
    5. Device example
    6. SINCE
    7. SINCE example
    8. Incremental
    9. Incremental example
    10. Options
E. Types of Restores
    1. Removing restore-lock
    2. Full
    3. Device
    4. Range Option
    5. Device
    6. Partial
    7. Replace

GCOS OPERATOR TRAINING

GENERAL COURSE OUTLINE (Cont'd.)

XIV. DPS 6 ARCHITECTURE AND CONCEPTS

- A. Task Groups
- B. File System
- C. Pathnames

XV. DPS 6 HARDWARE AND PERIPHERALS

- A. Processors/Models
- B. Megabus Configurations
- C. Battery Backup
- D. Consoles
- E. Printers
- F. Diskettes
- G. Cartridge Disk
- H. Central Processor Control Panel

XVI. DPS 6 BOOTSTRAP

- A. Power Up
- B. Quality Logic Test
- C. Loading the Operating System
- D. Boot Options
- E. Register Manipulation
- F. Power Down

XVII. DPS 6 OPERATOR COMMANDS AND FILE SYSTEM UTILITIES

- A. Command Line Structure
- B. Group Control
- C. Listeneur
- D. File System Control
- E. Console Control
- F. Utilities
- G. Operator Interface Manager

XVIII. MISCELLANEOUS OPTIONS

- A. RSIP
- B. Disk Structure
- C. RSIP Console Interaction
- D. Train Printers
  1. Startup Example #1
  2. Startup Example #2
  3. PTRAIN
  4. VFC

TABLE OF CONTENTS

TOPIC	TITLE	PAGE
I	HARDWARE/SOFTWARE OVERVIEW	1-1
II	PERIPHERAL OPERATION	2-1
III	H6000 CONSOLE SIMULATOR	3-1
IV	CONSOLE MESSAGES (HARDWARE) WWMCCS UNIQUE	4-1
V	JOB CONTROL LANGUAGE (JCL) OVERVIEW AND GCOS JOB FLOW	5-1
VI	BATCH CONSOLE EDITOR (JCLGEN)	6-1
VII	CONSOLE MESSAGES (JOB FLOW)	7-1
VIII	STARTUP AND BOOTLOADS	8-1
IX	SWITCH SETTINGS AND RECONFIGURATION	9-1
X	STARTUP CONSOLE EDITOR	10-1
XI	HARDWARE RELIABILITY AIDS	11-1
XII	WWMCCS INTERCOMPUTER NETWORK (WIN)	12-1
XIII	FILE MANAGEMENT SYSTEM (FMS)	13-1
XIV	DPS 6 ARCHITECTURE AND CONCEPTS	14-1
XV	DPS 6 HARDWARE/PERIPHERALS	15-1
XVI	DPS 6 BOOTSTRAP	16-1
XVII	DPS 6 OPERATOR COMMANDS AND FILE SYSTEM UTILITIES	17-1
XVIII	MISCELLANEOUS OPTIONS	18-1
APPENDIX		
A	SAVE AND RESTORE	A-1
B	GCOS ACCOUNTING AND ABNORMAL TERMINATION PROCESSING	B-1
C	PERIPHERALS	C-1

TABLE OF CONTENTS (Cont'd.)

APPENDIX	TITLE	PAGE
D	SWITCH SETTINGS AND RECONFIGURATION	D-1
E	NUMBER SYSTEM	E-1
F	GLOSSARY OF TERMS	F-1
G	BATCH CONSOLE EDITOR (JCLGEN)	G-1
H	STARTUP CONSOLE EDITOR	H-1
I	CONSOLE MANAGER FACILITY	I-1

GCOS OPERATOR TRAINING

SUGGESTED COURSE TOPIC MAP

<table>
<tr><th>DAY
HOUR</th><th>1</th><th>2</th><th>3</th><th>4</th><th>5</th></tr>
<tr><td>1</td><td>INTRODUCTION AND ADMINIS-TRATION</td><td>INTRODUCTION TO HARDWARE AND SOFTWARE (Cont'd.)</td><td rowspan="3">HARDWARE CONSOLE MESSAGES (WWMCCS UNIQUE)</td><td rowspan="2">JCL AND JOB FLOW (Cont'd.)</td><td rowspan="6">LAB</td></tr>
<tr><td>2</td><td rowspan="5">INTRODUCTION TO HARDWARE AND SOFTWARE</td><td rowspan="4">PERIPHERAL MAINTENANCE AND OPERATION</td></tr>
<tr><td>3</td><td rowspan="3">JOB CONTROL LANGUAGE AND JOB FLOW</td><td>JCLGEN</td></tr>
<tr><td>4</td><td rowspan="2">CONSOLE MESSAGES (JOB FLOW)</td></tr>
<tr><td>5</td><td rowspan="2">CDTS ORIENTATION</td></tr>
<tr><td>6</td></tr>
</table>

COURSE TITLE: GCOS OPERATOR TRAINING

COURSE CODE: E1ASC49151-000/-003

WEEK NUMBER: ONE

GCOS OPERATOR TRAINING

SUGGESTED COURSE TOPIC MAP

DAY / HOUR	1	2	3	4	5
1	STARTUP DECK AND BOOTLOADS	LAB	SWITCH SETTINGS AND RECONFIG-URATION	LAB	STARTUP EDITOR
2					
3					RELIABILITY AIDS
4					
5					WIN OVERVIEW
6					

COURSE TITLE: GCOS OPERATOR TRAINING

COURSE CODE: E1ASC49151-000/-003

WEEK NUMBER: TWO

GCOS OPERATOR TRAINING

SUGGESTED COURSE TOPIC MAP

<table>
<tr><th>DAY
HOUR</th><th>1</th><th>2</th><th>3</th><th>4</th><th>5</th></tr>
<tr><td>1
2</td><td>SYSTEM
BOOTS</td><td rowspan="4">LAB</td><td>DPS 6
CONCEPTS AND
OVERVIEW</td><td rowspan="4">LAB</td><td rowspan="2">MISCELLANEOUS
TOPIC</td></tr>
<tr><td>3</td><td rowspan="3">FMS</td><td>DPS 6
PERIPHERAL</td></tr>
<tr><td>4</td><td>DPS 6
OPERATOR
COMMANDS</td><td>REVIEW</td></tr>
<tr><td>5
6</td><td>DPS 6
OPERATOR
COMMANDS</td><td>TEST
AND
CRITIQUES</td></tr>
</table>

COURSE TITLE: GCOS OPERATOR TRAINING

COURSE CODE: E1ASC49151-000/-003

WEEK NUMBER: THREE

TOPIC I

HARDWARE/SOFTWARE OVERVIEW

Objectives: Upon completion of this topic, the student will be able to:

1. Describe the basic hardware components and their functions.
2. Explain the purpose and operation of extended memory.
3. Describe functions of system peripheral devices.
4. List the features and operation of Page Printing System (PPS).
5. Functions of the Front-End Network Processors.
6. Describe the function of General Comprehensive Operating Supervisor (GCOS) and its related software.
7. Describe the functions and structure of the File Management System (FMS).
8. Describe the operation and functions of the Time Sharing System (TSS).
9. List the functions of the test and diagnostics system.

HARDWARE/SOFTWARE CONCEPTS

Modern large-scale information systems are distinguished primarily by their ability to serve the information processing needs of many people. H6000 DPS capabilities are:

AUTOMATIC RESOURCE SHARING

MACHINE INDEPENDENCE

FILE MEDIA INDEPENDENCE

MULTIDIMENSIONAL MODES OF JOB SUBMISSION AND EXECUTION

MULTIDIMENSIONAL PERMANENT FILE SYSTEM

INTERACTIVE PROGRAM DEVELOPMENT FACILITIES

FULL RANGE OF FILE ORGANIZATION AND ACCESS METHODS

SERIES 6000 FAMILY

	SCIENTIFIC ACCENT	BUSINESS ACCENT
ENTRY		6025
	6030	
MEDIUM	6050	6040
LARGE	6070	6060
	↑ odd means FORTRAN	6080 ↑ even=COBOL
		H6000 DPS

H6000 DPS FEATURES

- REDUCED REQUIREMENTS FOR SPACE, POWER, AND AIR CONDITIONING
- FOUNDATION FOR NEW OPERATING SYSTEM
- FOUNDATION FOR DISTRIBUTED MAINTENANCE SERVICES
- INCREASED ADDRESSING CAPABILITIES TO 16MB
- IDENTICAL SOFTWARE, INCLUDING APPLICATION PACKAGES
- MULTIDIMENSIONAL DATA BASE ORIENTATION
  - -DM-IV ENVIRONMENT

FREE STANDING BASIC CONFIGURATION

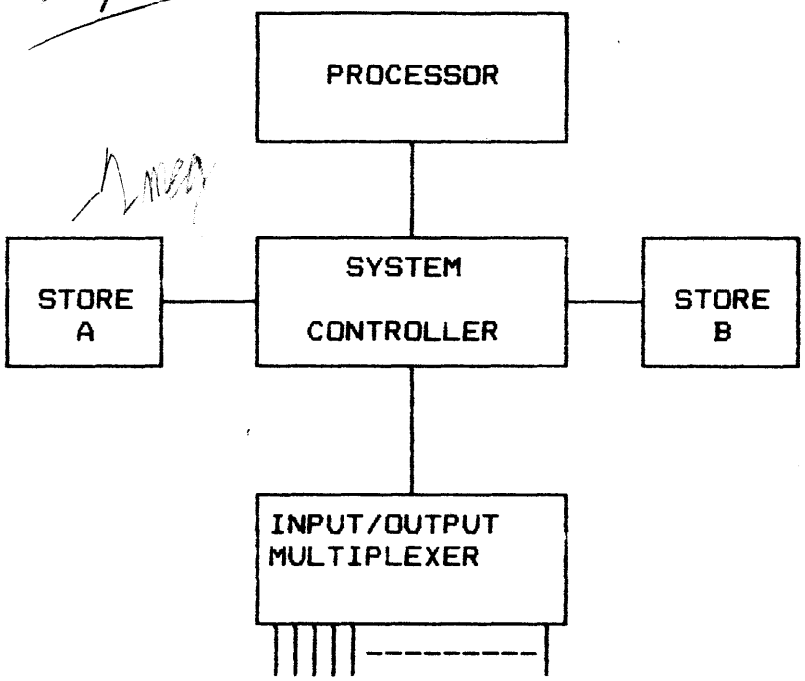

FUNCTIONAL MODULARITY

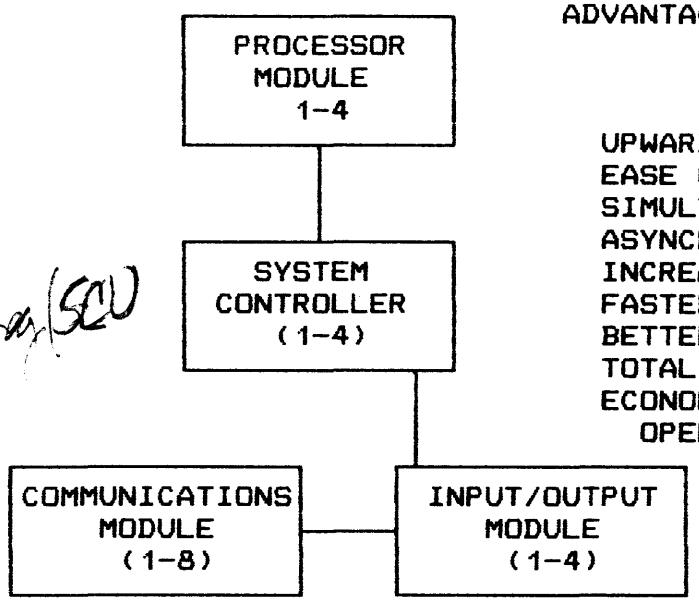

ADVANTAGES

- UPWARD COMPATABILITY
- EASE OF GROWTH
- SIMULTANEOUS OPERATIONS
- ASYNCHRONOUS MEMORY ORIENTED
- INCREASED THROUGHPUT
- FASTER MEMORY ACCESS
- BETTER RESOURCE UTILIZATION
- TOTAL SYSTEMS AVAILABILITY
- ECONOMICS OF SINGLE SYSTEM OPERATION

FUNCTIONAL MODULARITY

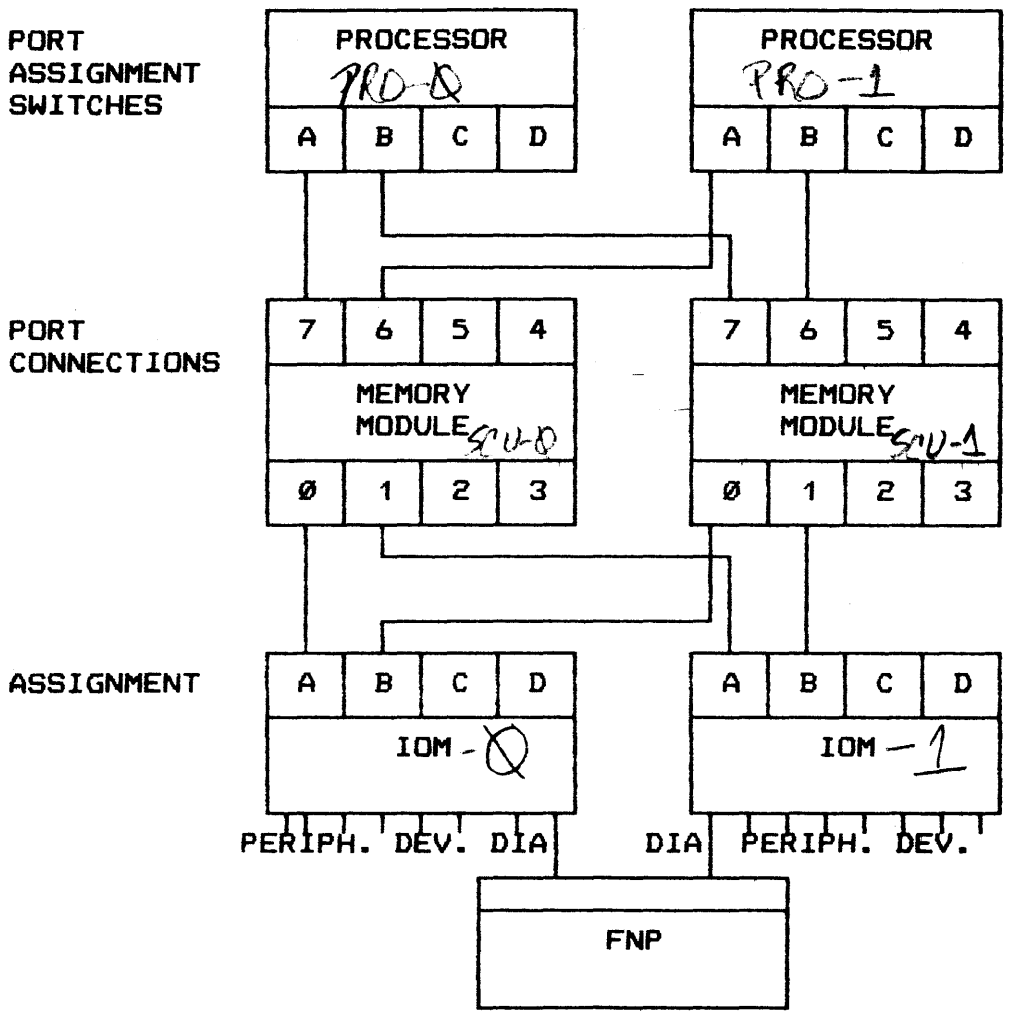

Port Zero = Highest priority

PROCESSOR

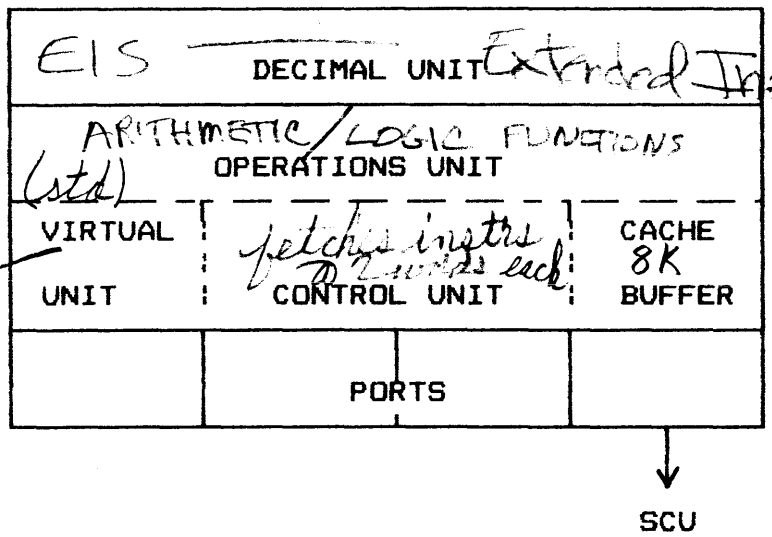
EIS
DECIMAL UNIT
ARITHMETIC/LOGIC FUNCTIONS
OPERATIONS UNIT
(std)
VIRTUAL
UNIT
CONTROL UNIT
CACHE
8K
BUFFER
PORTS
SCU

PROCESSOR (Cont'd.)

OPERATIONS UNIT (NON-EIS INSTRUCTIONS)

CONTAINS LOGIC NECESSARY TO EXECUTE ARITHMETIC AND LOGIC OPERATIONS
CONTAINS REGISTERS

CONTROL UNIT
PROVIDES INTERFACE BETWEEN OPS UNIT AND PORTS
DECODES INSTRUCTIONS AND GENERATES EFFECTIVE ADDRESSES
PERFORMS ADDRESS CHECKING

PORTS (1-4)
INTERFACES TO SYSTEM CONTROLLER (MEMORY MODULE)

DECIMAL UNIT (EIS)
PERFORMS CHARACTER AND STRING ORIENTED EXTENDED INSTRUCTIONS

CACHE BUFFER
TEMPORARY STORAGE AREA FOR INSTRUCTIONS AND DATA

VIRTUAL UNIT
CONVERTS VIRTUAL ADDRESSES TO REAL MEMORY ADDRESSES

MODES OF OPERATION

- Slave Mode (USER mode)

  Restricted set of instructions
  Controlled memory access rights

- Master Mode

  Limited to certain domains
  Restricted set of instructions

- Privileged Master Mode (GCOS & HCM)

  Unlimited memory access
  Unrestricted set of instructions

HCM (Hard Core Monitor)
memory-resident
portion of GCOS

MODES OF OPERATION

Another by-product of the domain concept is enhanced software reliability. There are now three levels of access rights in the system, slave mode, master mode, and privileged master mode.

Slave mode is a processor mode of operation, whereby a process has only controlled memory access rights and a restricted set of instructions. Because of sharing capabilities, many GCOS 8 functions can be accomplished in slave mode. Many of the software functions run under GCOS 8 master instructions. Only in privileged master mode are access and execution rights unrestricted. This mode is used only by a small portion of the GCOS 8 executive. The high reliability results from the fact that many of the operating system functions can run under GCOS 8 slave or master mode with access rights restricted to only the areas of storage that are needed.

For example, each GCOS module is a separate segment, and is inaccessible from other GCOS modules; even in master mode. This access limitation will aid in the early detection of many forms of software errors, such as invalid memory accesses at the time they happen.

PROCESSOR

CACHE BUFFER

- HIGH SPEED (100 NS) BUFFER IN PROCESSOR

  -ONE PER PROCESSOR IN SYSTEM

- BASIC IDEA - PROCESSOR ACCESSES A 100 NS "MEMORY" MOST OF THE TIME

- INCREASES PROCESSOR SPEED SIGNIFICANTLY - REMOVES DRAG OF MEMORY AFTER INITIAL FETCH

  -BASED ON REPETITIVE USE OF SAME INFORMATION AS NORMAL CASE

- EXAMPLE OF HIERARCHIAL CACHE BUFFER AND MAIN MEMORY

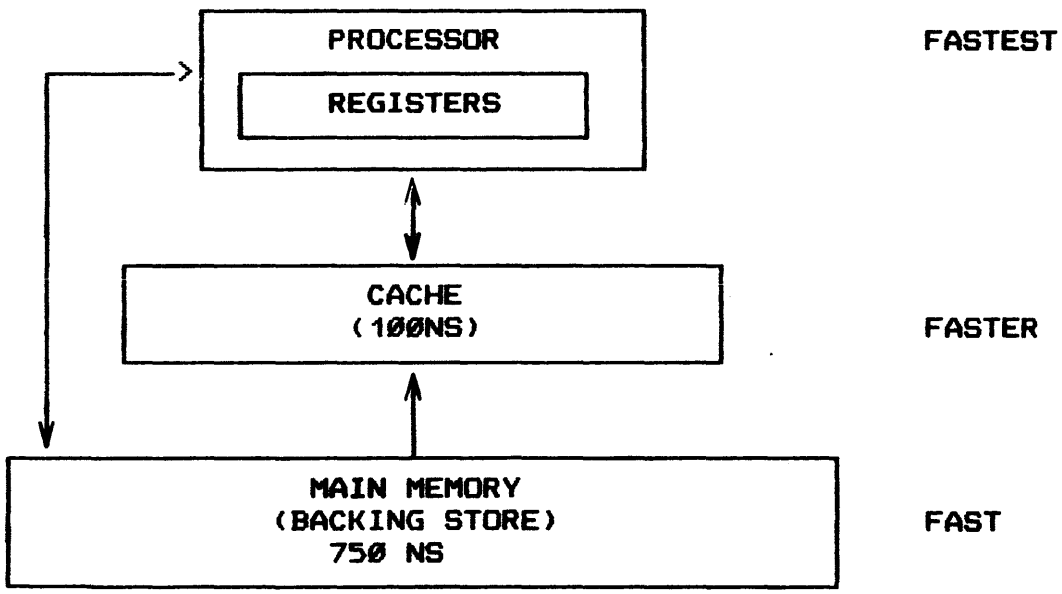

PROCESSOR

KEY CACHE FEATURES

- VERY FAST
- COMPLETELY TRANSPARENT TO USER PROGRAMS - AUTOMATIC OPERATION
- REQUIRES NO PROGRAM OPTIMIZING
- SIMPLE, EFFICIENT, RELIABLE DESIGN
- HIGH HIT RATIO
- AUTOMATIC WITHDRAWAL BY ELAN ON CACHE PROBLEMS
- EXTREMELY FAST FLUSHING TO AVOID STALE DATA PROBLEM

PROCESSOR (Cont'd.)

EIS = EXTENDED INSTRUCTION SET

AVAILABLE - ONLY ON 6025 - 6040 - 6060 - 6080 - H6000 DPS

OVER 100 ADDITIONAL INSTRUCTIONS TO MATCH COBOL LANGUAGE FEATURES:

1. ALPHANUMERIC DATA MANIPULATION

2. EDITING

3. ONE, TWO AND THREE ADDRESS INSTRUCTIONS

4. DECIMAL ARITHMETIC
   A. FIXED POINT (INTEGER)
   B. SCALED
   C. FLOATING POINT
   D. UP TO 63 DIGITS = precision computation

PROCESSOR

INSTRUCTION OVERLAP

WITHOUT OVERLAP

FETCH 1,2	INT 1		INT 2		FETCH 3,4	INT 3	
		EXEC 1		EXEC 2			EXEC 3

WITH OVERLAP

FETCH 1,2	INT 1	INT 2	FETCH 3,4	INT 3	INT 4	FETCH 5,6	INT 5
		EXEC 1	EXEC 2		EXEC 3	EXEC 4	

SCU = SYSTEM CONTROL UNIT

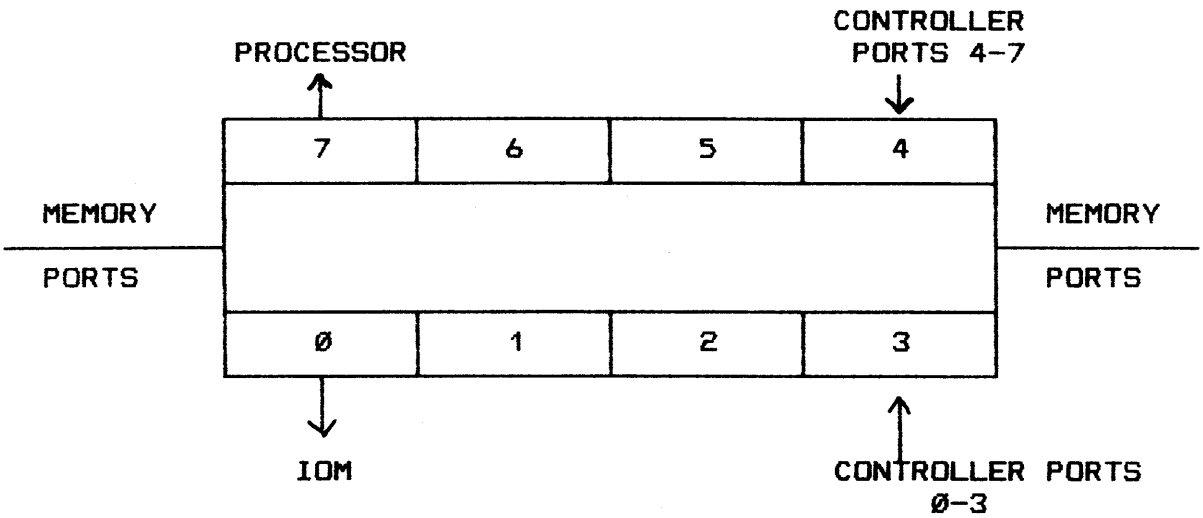

SYSTEM CONTROLLER

1. PASSIVE COORDINATION ELEMENT
2. NO ARITHMETIC OR LOGICAL OPERATIONS
3. DISTRIBUTES MEMORY CYCLES TO PROCESSOR, IOM (port) ON PRIORITY BASIS
4. EVEN-ODD WORD PAIR ACCESSES (72 BITS)
5. CENTRAL HARDWARE SYSTEM AND COMMUNICATIONS CONTROL
6. TRANSMITS HARDWARE INTERRUPT SIGNALS

STORAGES

1. PROGRAM AND DATA STORAGE
2. MEMORY PARITY CHECKING
3 1-2 STORES UP TO 2 MILLION WORDS EACH (H6ØØØ DPS)

SYSTEM CONTROLLER

AVAILABILITY FEATURES

- MULTIPLE SYSTEM CONTROLLERS — 4 MAX
- ERROR DETECTION AND CORRECTION - EDAC
  - SBEC - SINGLE BIT ERROR CORRECTION
  - DBED - DOUBLE BIT ERROR DETECTION

  } or instr
- COMPREHENSIVE PARITY CHECKING
- CHECK ON PARITY CHECKING LOGIC
- T AND D SOFTWARE - CONTROLLED HARDWARE OPERATING MARGINS
- OVERLAPPED USE AND MEMORY REPAIR
- TOLTS WORST CASE MEMORY TESTS ON-LINE
- GCOS AUTOMATIC MEMORY WITHDRAWAL ON-LINE
- READ/WRITE MEMORY TESTS
- AUTOMATIC INSTRUCTION RETRY

SYSTEM CONTROLLER

LOGICAL MEMORY ADDRESSING

- NO PERMANENT ADDRESSES IN MEMORY BANKS
- ADDRESSES ASSIGNED VIA PROCESSOR AND IOM SWITCHES AT STARTUP
- VIA SWITCHES ADDRESSES ARE REASSIGNABLE BANK TO BANK WITHIN SYSTEM CONTROLLER
- ALLOWS MOVING AN ADDRESS RANGE WHEN MEMORY BANK FAILS
- ALLOWS FE TO SERVICE FAILED BANK CONCURRENTLY WITH USER OPERATION

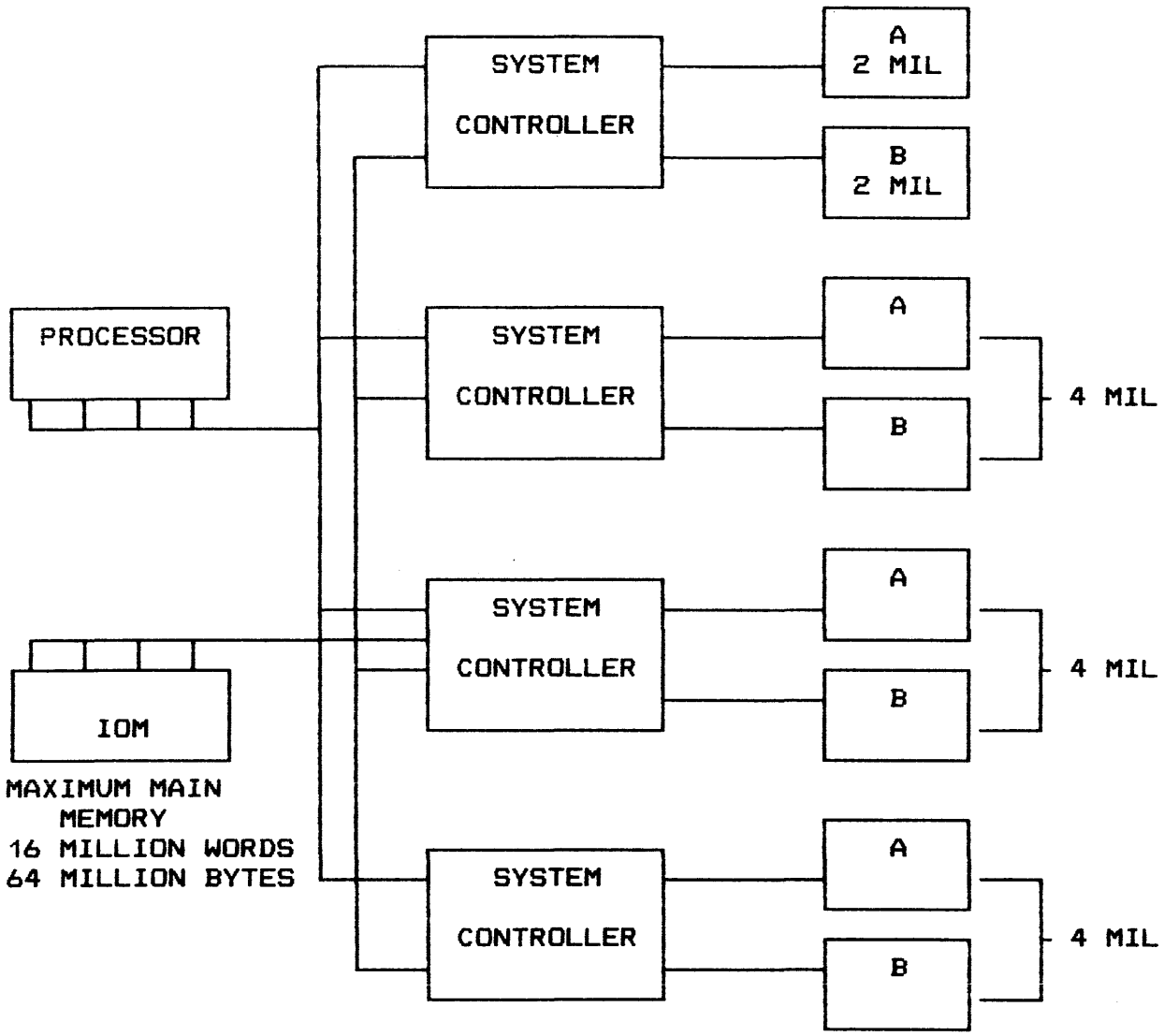
SYSTEM
CONTROLLER
A
2 MIL
B
2 MIL
PROCESSOR
SYSTEM
CONTROLLER
A
B
4 MIL
SYSTEM
CONTROLLER
A
B
4 MIL
IOM
MAXIMUM MAIN
MEMORY
16 MILLION WORDS
64 MILLION BYTES
SYSTEM
CONTROLLER
A
B
4 MIL

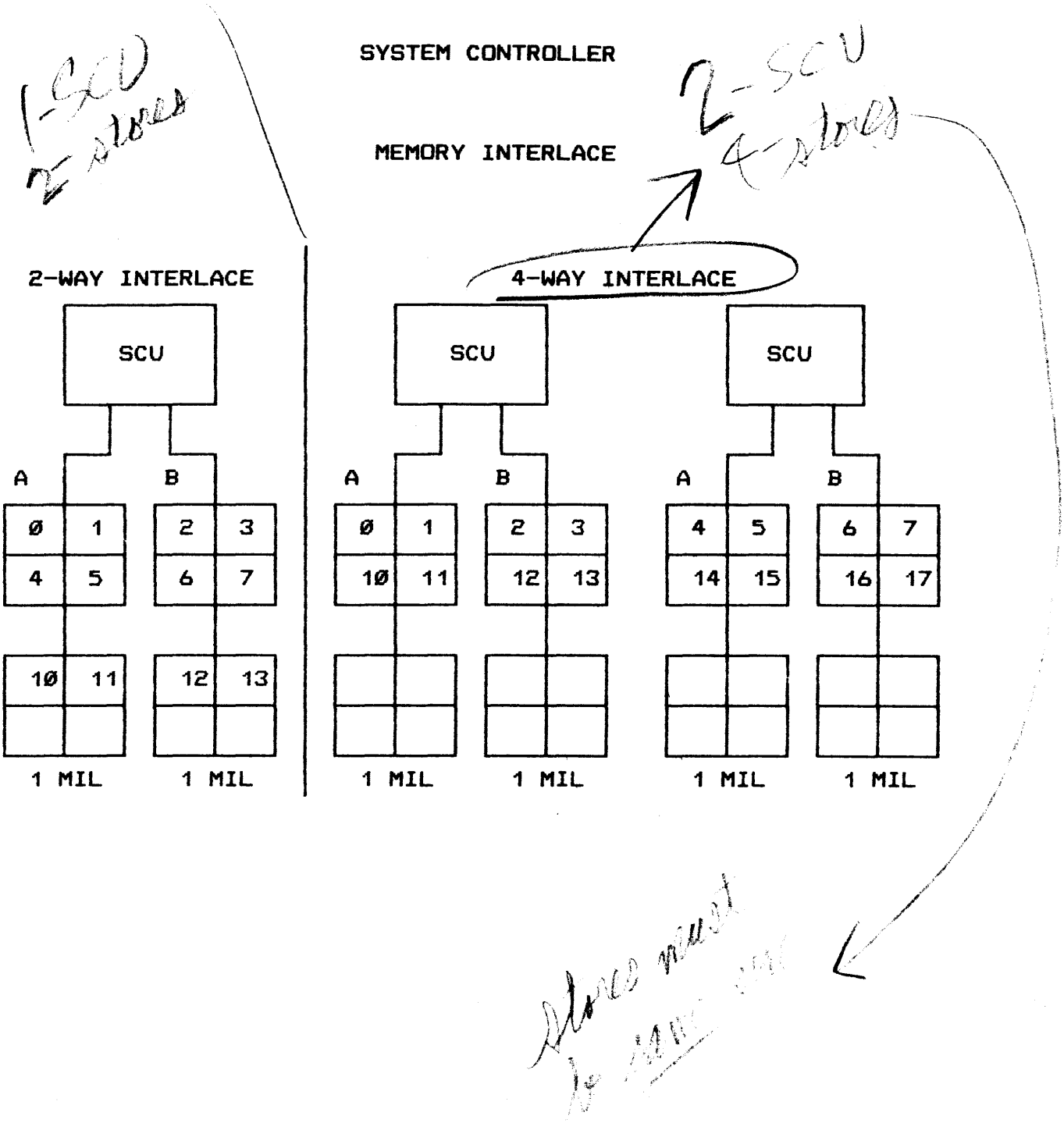
SYSTEM CONTROLLER
MEMORY INTERLACE
2-WAY INTERLACE
4-WAY INTERLACE
SCU
SCU
SCU
A
B
A
B
A
B
0
1
2
3
4
5
6
7
10
11
12
13
14
15
16
17
1 MIL
1 MIL
1 MIL
1 MIL
1 MIL
1 MIL

INPUT/OUTPUT MULTIPLEXER MODULE

- INTERFACE BETWEEN SYSTEM CONTROLLER AND PERIPHERALS
- 8-24 PERIPHERAL DATA CHANNELS
- TWO TYPES OF DATA CHANNELS:
  - PSI CHANNEL 1.3 MCS TRANSFER RATE
  - DIA CHANNEL 1.5 MCS TRANSFER RATE
- FULL SIMULTANEITY ON ALL CHANNELS
- MEMORY PROTECTION
- SCATTER GATHER INPUT/OUTPUT (HARDWARE)

IOM ROLE

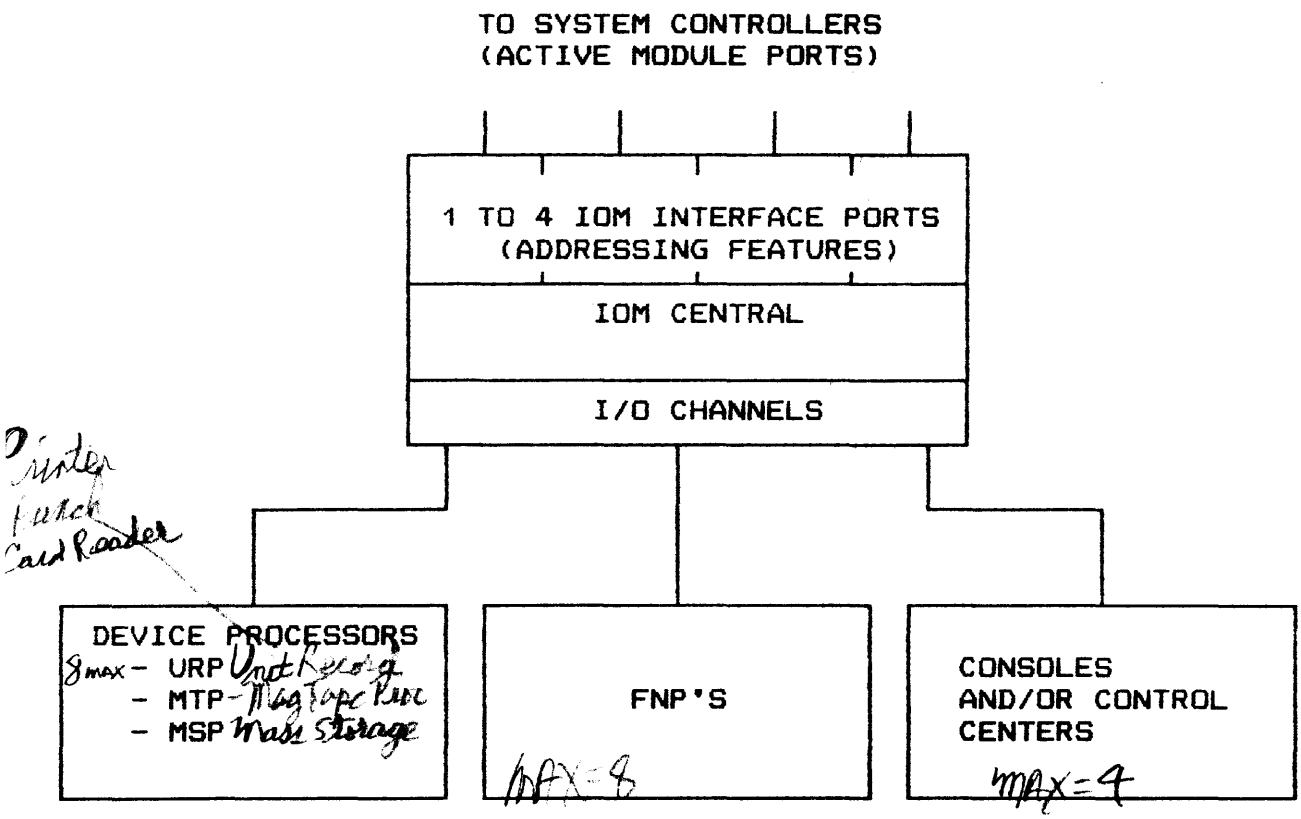

main console on PUB 31 = special PSI channel

max consoles=4

firmware = a control program [illegible]

IOM

IOM ARCHITECTURE

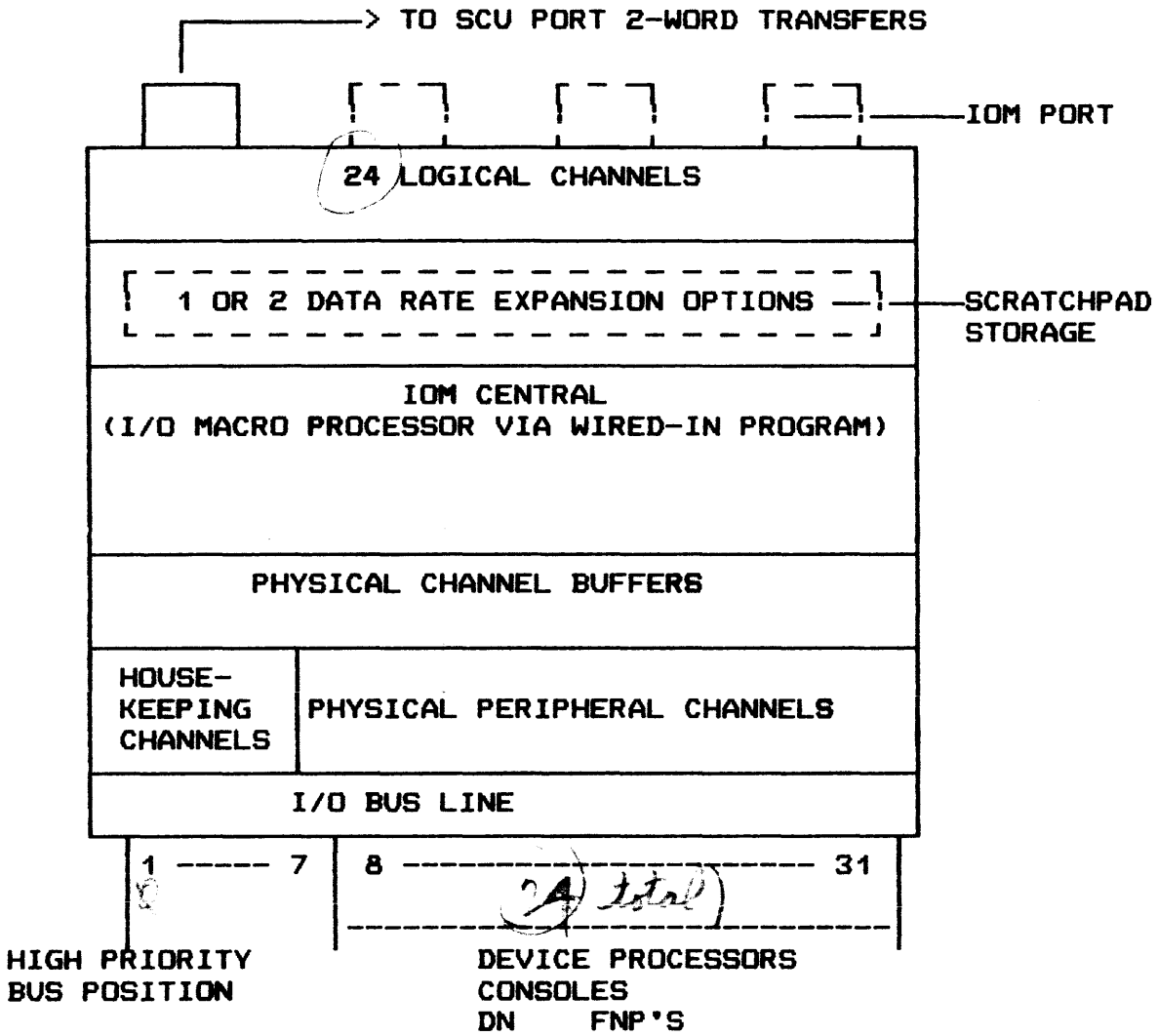

IOM

PHYSICAL AND LOGICAL CHANNEL RELATIONSHIPS

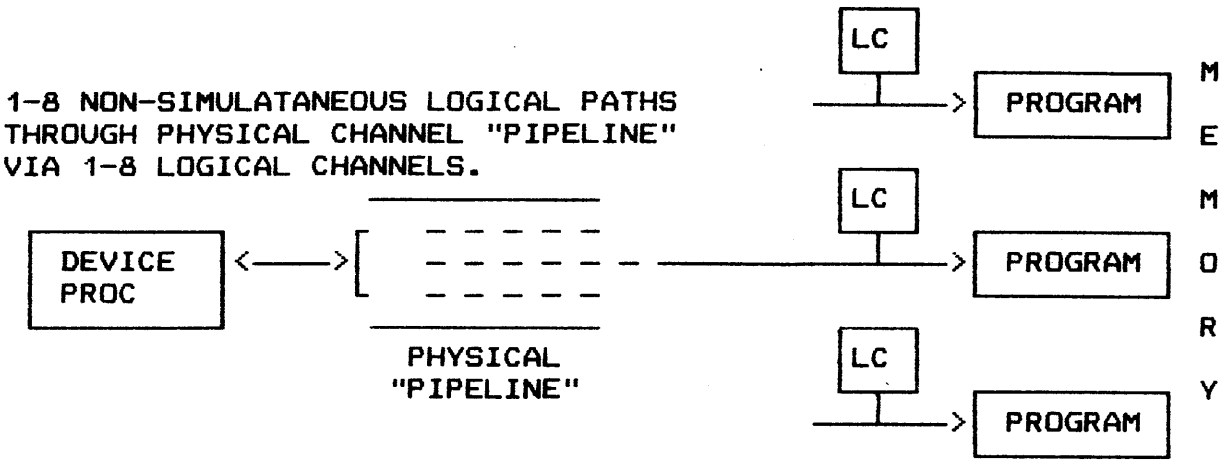

RULES

- ONE LOGICAL PER PHYSICAL ALWAYS
- URP - ONE LOGICAL PER DEVICE
- MTP OR MSP - OPTIONAL SECOND LOGICAL PER PHYSICAL
  MAX 4 LOGICAL USEFUL PER SUBSYSTEM
- MSP/0400/0451 - TO SECOND, THIRD, OR FOURTH
  OPTIONAL LOGICAL FOR SUBSYSTEM WITH 1 PHYSICAL
  CHANNEL OR 2 PHYSICAL CHANNELS

BENEFITS OF MULTIPLE LOGICAL PER PHYSICAL

- ALLOWS QUEUING I/O COMMANDS, ONE PER LOGICAL CHANNEL ASSIGNED
- CUTS GCOS OVERHEAD
- INCREASES CHANNEL EFFICIENCY - TO 8-WAY BLOCK MULTIPLEXING
- INCREASES SUBSYSTEM THROUGHPUT

MAXIMUM LOGICAL CHANNELS PER PHYSICAL CHANNEL

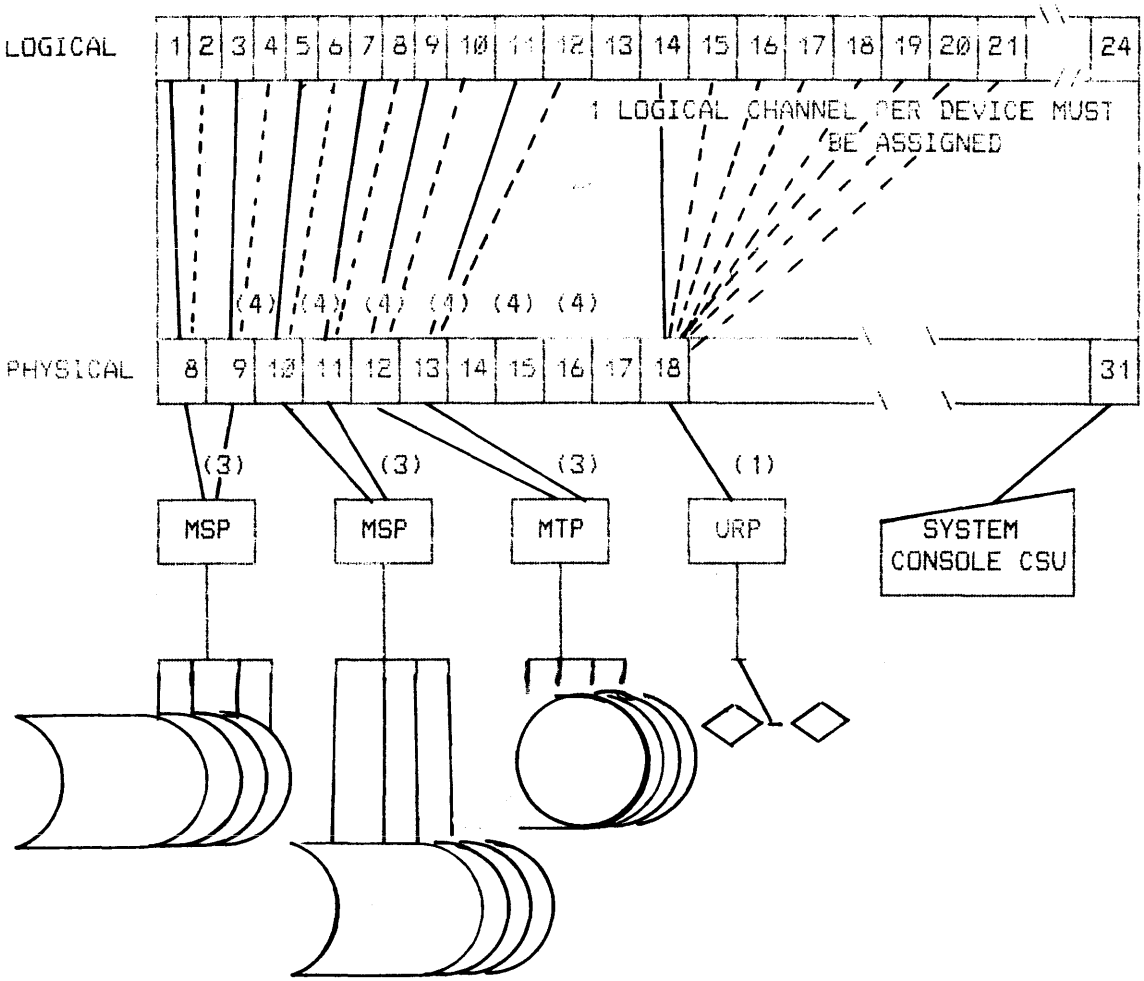

(1) GCOS USES SPECIFIC PREASSIGNED LOGICAL CHANNEL TO REACH A GIVEN DEVICE

(2) USEFUL MAXIMUM OF 4 LOGICAL CHANNELS PER SUBSYSTEM, EITHER SINGLE-CHANNEL OR DUAL-CHANNEL CASE, OR 1 OR 2 MSP'S

(3) USEFUL MAXIMUM OF ONE MORE LOGICAL CHANNEL ON EITHER OR BOTH PHYSICAL CHANNELS

(4) GCOS CAN USE ANY LOGICAL CHANNEL OF ASSIGNED SET TO REACH ANY DEVICE

IOM

AVAILABILITY FEATURES

- DATA INTEGRITY CHECKS
  - CONTINUOUS PARITY CHECKS ALONG DATA PATHS IN IOM
  - CHANNEL CONTROL WORD CHECKS
- FAIL-SOFT CONFIGURATIONS
  - 4 IOM'S PER SYSTEM
- MAINTAINABILITY AIDS
  - AUTOMATIC ON-LINE SYSTEM FAULT MONITORING VIA SYSTEM FAULT HARDWARE
  - GCOS EXCEPTION PROCESSING
  - OFF-LINE T & D SOFTWARE SAMPLING OF HARDWARE VIA SNAPSHOT HARDWARE
  - OFF-LINE T & D SOFTWARE CHECK OF CHANNEL CONTROL WORD LOGIC VIA SCRATCHPAD ACCESS IN HARDWARE
  - OFF-LINE T & D SOFTWARE CHECK OF IOM OPERATION VIA WRAP-AROUND CHANNEL HARDWARE
  - OFF-LINE T & D SOFTWARE-CONTROLLED MARGIN TESTS TO STRESS LOGIC ABOVE/BELOW NORMAL LEVELS
  - TOLTS NOT USED IN IOM

IOM BENEFITS

- HIGH I/O THROUGHPUT
- HIGH SYSTEM THROUGHPUT
- HIGH AVAILABILITY/MAINTAINABILITY
- FAIL-SOFT CONFIGURATIONS
  - ULTRA AVAILABILITY
- LOWER GCOS OVERHEAD
  - AUTO I/O COMMAND RETRY
  - MULTIPLE LOGICAL CHANNELS PER PHYSICAL CHANNEL
- LOWER PROCESSOR OVERHEAD
  - ASYNCHRONOUS IOM
  - SEPARATION OF FUNCTIONS
  - AUTO I/O COMMAND RETRY
  - NO STALLING OF PROCESSOR
  - NO DATA TRANSFER THROUGH PROCESSOR
- HIGH GROWTH

PERIPHERALS

UNIT RECORD DEVICES

- PRT401 PRINTER - 1200 LINES PER MINUTE
- PRT402 PRINTER - 1600 LINES PER MINUTE
- CCU0401 READER/PUNCH - 400 CARDS PER MINUTE
- PRU0901 PRINTER - 900 LINES PER MINUTE
- PRU1201 PRINTER - 1200 LINES PER MINUTE

MTP- mag tape processor

PERIPHERALS (Cont'd.)

MAGNETIC TAPE SUBSYSTEM CHARACTERISTICS

FEATURES:

- NINE TRACK, PHASE ENCODED
- UP TO 8 HANDLERS/CHANNEL
- DUAL CHANNEL OPERATION/CONTROLLER
- UP TO 16 HANDLERS/DUAL CHANNEL
- ONLINE MAINTENANCE (TOLTS OR MANUAL)
- FIELD UPGRADE TO DUAL CHANNEL
- IN FLIGHT ERROR CORRECTION (1600 BPI)
- TRANSFER RATE: UP TO 427KC
- REWIND TIME: 36 SEC. ON MTH610
- DENSITY CAPABILITIES UP TO 6250 BPI (800,1600,6250)

PERIPHERALS (Cont'd.)

MASS STORAGE SUBSYSTEM CHARACTERISTICS

- UP TO 16 DRIVES/CONTROLLER
- DUAL CHANNEL OPERATION/CONTROLLER
- UP TO 32 DRIVES - 2 SUBSYSTEMS CROSSBARRED
- COMMAND STACKING
- ROTATIONAL POSITION SENSING (LATENCY REDUCTION) FIFO
- STATISTIC GATHERING (ERROR RECORDS RECORDED) Rd/Wrt errors
- ERROR DETECTION & CORRECTION (AUTO ENTRY) EDAC
- ONLINE MAINTENANCE

Release Device
Run Test

PERIPHERALS (Cont'd.)

MASS STORAGE SUBSYSTEMS CHARACTERISTICS (MSU0500/0501)

- UP TO 8 DISK DRIVES/CONTROLLER 2 spindles per drive
- 16 SPINDLES PER CONTROLLER
- DUAL CHANNEL OPERATIONS/CONTROLLER
- 15 DISK UNITS - 2 SUBSYSTEMS CROSSBARRED
- 30 SPINDLES MAXIMUM ON 2 SUBSYSTEMS CROSSBARRED
- SOFTWARE FIRMWARE TREATS EACH MSU0501 (2 SPINDLES) AS FOUR LOGICAL MSU0451's.
- MSU0501 AND MSU0451 MIXED ON SAME CONTROLLER
- SINGLE SPINDLE MAINTENANCE BY FE.
- COMMAND STACKING
- ROTATIONAL POSITION SENSING
- EDAC
- ONLINE MAINTENANCE

PERIPHERALS (Cont'd.)

CYLINDER

A Cylinder is not a physical portion of a disk like a track, but rather, a CYLINDER is a conceptual entity.

A CYLINDER is all of the tracks that can be accessed on a disk volume without shifting the position of the read/write arms.

PERIPHERALS (Cont'd.)

The tracks of a disk volume are usually numbered according to their position in a cylinder, beginning with track Ø (or track ØØ) as the topmost track.

PERIPHERALS (Cont'd.)

By numbering the tracks and cylinders of a disk volume, a specific track of the volume can be referenced through its position in a cylinder.

The cylinders of a disk volume are usually numbered beginning with cylinder Ø (or cylinder ØØØ) as the outermost cylinder of the volume.

PERIPHERALS

THROUGHPUT FEATURES FOR DISK SUBSYSTEMS

o COMMAND STACKING	LATENCY REDUCTION
o ROTATIONAL POSITION SENSING	
o BLOCK MULTIPLEXING	BETTER USE OF PHYSICAL CHANNEL
o MULTIPLE LOGICAL CHANNELS	

PERIPHERALS

MASS STORAGE AVAILABILITY FEATURES

- ULTRA AVAILABILITY CONFIGURATIONS

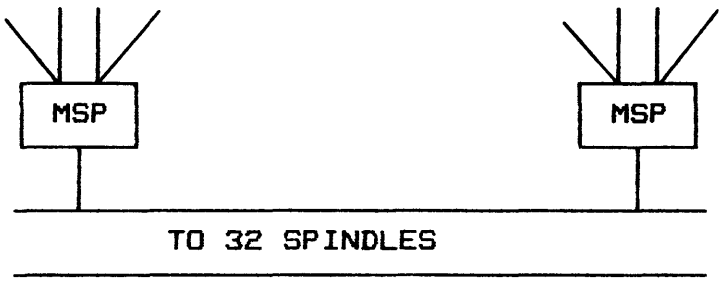

- FULL REDUNDANCY

- DUAL-CHANNEL MSP'S
- FULL DEVICE CROSS-BARRING
- DELTA CONFIGURATION
- ON-LINE/OFF-LINE TESTS
- SERVICE DRIVE WHILE SYSTEM OPERATES
- AUTOMATIC I/O COMMAND ENTRY
- AUTOMATIC ERROR LOGGING
- ECOL ERROR LOGGING
  - PREDICTIVE DIAGNOSIS
- SELF-TEST ON MSP STARTUP

4K memory in a controller

PERIPHERALS

MSU0400/0451/0501 THROUGHPUT OPTIMIZING

- COMMAND STACKING/QUEUING
  - STACKING OCCURS VIA LOGICAL CHANNELS
  - TO 4 R/W COMMANDS STACKED PER SUBSYSTEM
  - ONE COMMAND PER DEVICE

- ROTATIONAL POSITION SENSING
  - SELECTS OPTIMUM R/W COMMAND FROM COMMAND STACK
  - MINIMIZES LOSSES DUE TO LATENCY

- BLOCK MULTIPLEXING
  - CONNECTS CHANNEL TO DEVICE WITH MOST FAVORABLE SECTOR IN POSITION
  - CONNECTS CHANNEL ONLY WHEN PERTINENT SECTOR IS AT R/W HEAD
  - OPTIMIZES USE OF CHANNEL

- LOGICAL CHANNELS
  - PROVIDE QUEUE OF COMMANDS
  - PROVIDE ROUTE FOR COMMANDS INTO COMMAND STACK
  - CONTROL DATA TRANSFER TO/FROM PERTINENT PROGRAM
  - UP TO 4 PER SUBSYSTEM
  - NOT MORE THAN NUMBER OF SPINDLES OR AVERAGE MPD

PERIPHERALS

Peripheral subsystem interface

MASS STORAGE CONFIGURATION

TERMINOLOGY

PSI CHANNEL - Interface to some external device (IOM) from MPC.

LA - Link Adapter in MPC, interface to the PSI channel.

CA - Control Adapter in MPC, interface to disk drives.

EDE/ADE - Extended (Additional) Drive Electronics. One necessary for each group of FOUR disk drives. Provides the connection and addressing hardware between the drives and the CA.

For the purposes of generality in configuration diagrams, this feature will be termed Device Interface (DI).

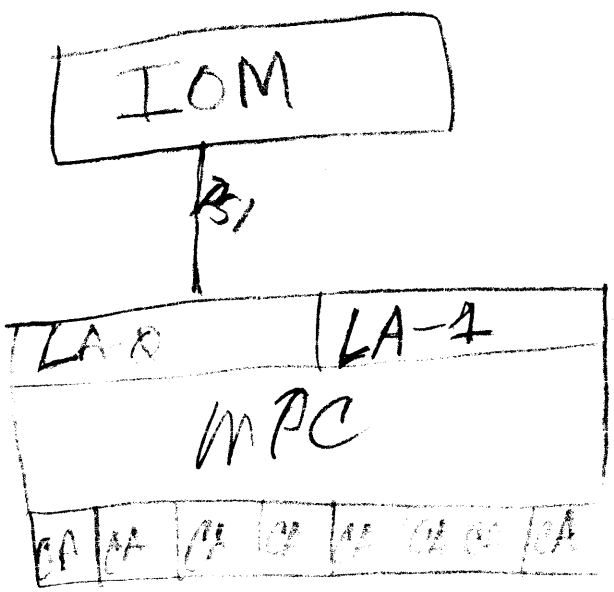

PAGE PRINTING SYSTEM

OFF-LINE NON-IMPACT PRINTER

PRINTS ON ONE-PART ROLLS OF PAPER

PRINTS DATA AND THE FORM

CUTS, COLLATES, STACKS IN 1 PASS

PUNCHES 2 OR 3 HOLES TOP OR SIDE

8 TO 32 STACKERS

TWO MODELS TWO SPEEDS

- 140 PAGES/MIN (12,000 LPM)
- 210 PAGES/MIN (18,000 LPM)

PAGE PRINTING SYSTEM

COMPATIBLE TO:

IBM EBCDIC TO ASCII

BURROUGHS BCL/EBCDIC TO ASCII

UNIVAC EXEC-8

CDC CODE CONVERSION

SOFTWARE AVAILABLE TO SUPPORT IBM ØS/36Ø AND OS/37Ø

OPTIONAL FONT AND COLOR TONER

PAGE PRINTING SYSTEM

SPECIFICATIONS

PAPER STOCK UP TO 3800 FOOT ROLLS

PRINTABLE CHARACTERS UP TO 512 POSSIBLE. OPTIMIZED FONT CONTAINS 128 CHARACTERS

PRINT FORMAT 4, 6, 8, OR 10 LINES PER INCH VERTICALLY; 105 TO 132 CHARACTERS PER LINE (10.0 TO 12.5 PER INCH)

RESOLUTION 200 DOTS PER INCH VERTICALLY AND HORIZONTALLY

REPRODUCTION SYSTEM ELECTROSTATIC

INPUT MEDIUM PRINT IMAGE TAPE 7 OR 9 TRACK

FRONT-END NETWORK

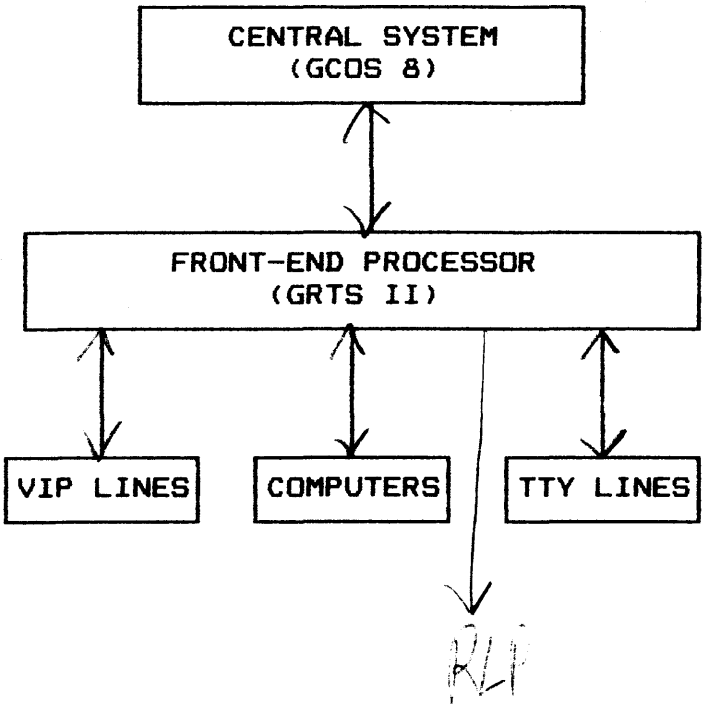

Gen'l Remote Terminal Supt, Ver. 2

DN-355 FRONT-END NETWORK PROCESSOR

FRONT END CONCEPT MINIMIZES:
SYSTEM OVERHEAD
MEMORY REQUIREMENTS

- FORMATS MESSAGES:

  FORWARDS TO DISK
  AUTOMATIC CHARACTER TRANSLITERATION

- CONTROLLED BY OWN OPERATING SYSTEM — GRTS-2
- 32K/64K WORDS, 18 BITS/WORD, 1 us MEMORY CYCLE (Range)
- SUPPORTS: 400 DEVICES (96 lines max)
  TTY LINES, OR
  REMOTE COMPUTERS, OR
  VIP LINES, OR
  COMBINATIONS OF THE ABOVE
- AUTOMATIC TTY SPEED SELECTION
- CONNECTS TO AN IOM DATA CHANNEL

DIA - direct interface adapter

DN-355 FRONT-END NETWORK PROCESSOR

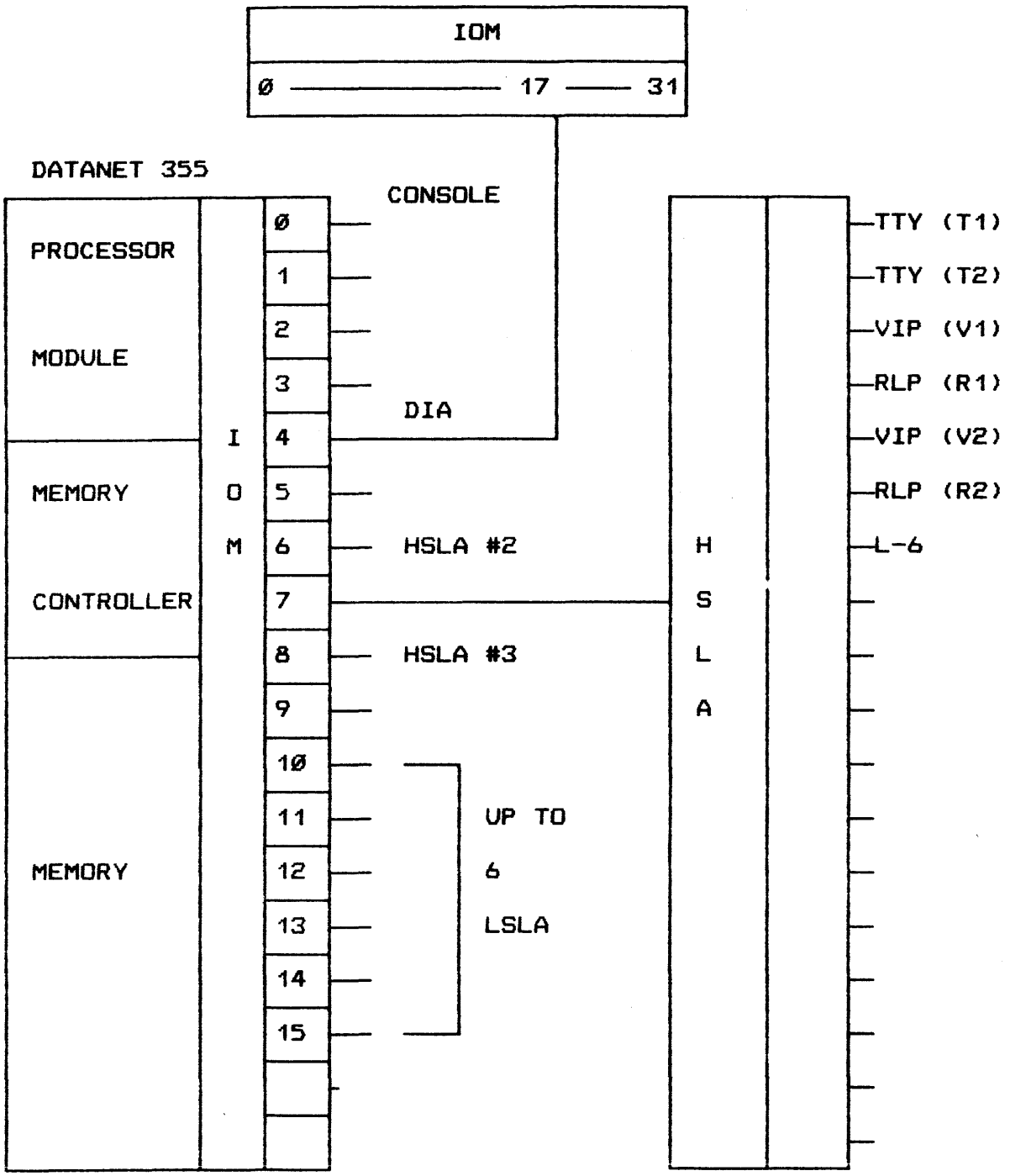

HSLA - high speed line adapter
LSLA - low speed " "

DCU 6661/78 FRONT-END NETWORK PROCESSOR

PROVIDES A FUNCTIONAL SEPARATION OF INFORMATION AND COMMUNICATIONS PROCESSING ACTIVITY.

- LOGICALLY COMPATIBLE WITH SYSTEM SOFTWARE AND USER-GENERATED PROGRAMS OF THE DATANET 355 AND 6600 FAMILY OF FNP'S.
- CONTROLLED BY OWN OPERATING SYSTEM.
- 64K WORDS, 18 BITS/WORD, 1 us MEMORY CYCLE.
- 1 MILLION INSTRUCTIONS PER SECOND.
- MOS EDAC MEMORY.
- 10M TRANSFER RATE 2 MILLION BYTES PER SECOND.
- 8 MAXIMUM PER SYSTEM.

DCU 6661/78 FRONT-END NETWORK PROCESSOR (Cont'd.)

- SUPPORTS:
  - TTY DEVICES (KSR 33, 35).
  - REMOTE COMPUTER (L-6,DPS/6).
  - VIP TERMINALS (786, 7705, 7700).
  - ANY COMBINATION OF THE ABOVE TO A MAXIMUM OF 96 LINES.
  - AUTOMATIC LINE SPEED SELECTION.
  - CONNECT TO H6000/DPS IOM DATA CHANNEL.
  - TERMINALS AND SUBSYSTEM UP TO 50,000 BPS CAN BE CONNECTED TO THE SYSTEM.

COMMUNICATIONS HARDWARE
6661/6678 MAINFRAME

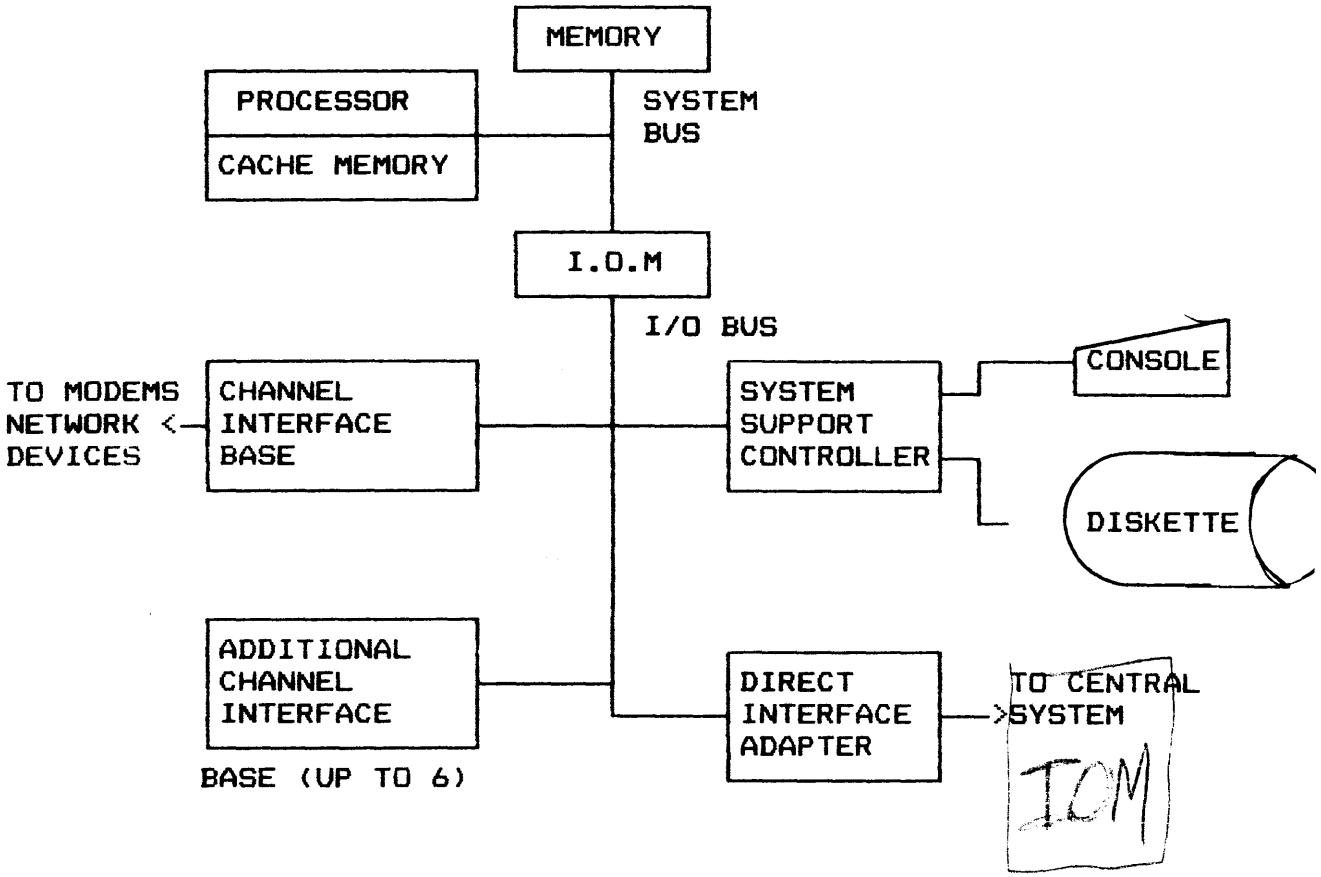

GCOS CONCEPTS

GCOS maintains the status of all system resources (peripherals, memory, and processors) and all user jobs in the system. The System Scheduler accommodates a virtually unlimited number of jobs (available disk storage permitting). These jobs can be entered into the system through multiple central and remote devices concurrent with the execution of jobs in the system. The jobs are dispensed to the system according to priorities and resource requirements. GCOS allocates system resources to jobs in the allocator queue in accordance with the priority of the job, and supervises the concurrent and simultaneous execution of as many processes (up to 511) as the configuration can accommodate. GCOS also controls the concurrent printing/punching of output from completed processes. High-urgency processes can be expedited by swapping out processes in execution.

GCOS also provides the programmer with a logical approach to problem solution. There are no constraints or unusual programming considerations imposed on the programmer because of the multiprogramming or multiprocessing environment in which the program is executed. File processing is performed sequentially or randomly at the logical file level; the programmer need not be concerned with the physical characteristics and constraints of the peripheral device used nor with the organization of the file system.

511 max number of jobs
− 34 GCOS systems use
477 user jobs

BENEFITS OF GCOS

* VERY EFFICIENT SPACE UTILIZATION

* MAXIMUM MEMORY CONFIGURATION TO 64 MILLION BYTES

* EXECUTION OF VERY LARGE PROCESSES WITH VERY SMALL REAL MEMORY REQUIREMENTS (NATIVE MODE)

* EXECUTION OF GCOS III PROGRAMS (ACCOMMODATION MODE)

* MANAGEMENT OF UP TO 477 USER PROCESSES CONCURRENTLY

* PROGRAM, SYSTEM AND DATA SECURITY

  - MEMORY PROTECTION
  - THREE LEVELS OF PRIVITY
  - DOMAINS DEFINED BY SOFTWARE AND MANAGED BY HARDWARE
  - UPPER PROCESSES ISOLATED FROM EACH OTHER AND FROM THE SYSTEM SOFTWARE

* CENTRALIZED PERMANENT FILE CONCURRENCY AND INTEGRITY CONTROL WITH A DATA BUFFER MANAGER

* SUPPORT OF TDS, MULTI-COPY TSS AND DMIV-TP

* EFFICIENT SLAVE SUPPORT MODULE FEATURES

  - RESERVED MEMORY POOL FOR MODULE FEATURES
  - SHARED MODULE USAGE BY MANY PROCESSES
  - EFFICIENT MODULE POOL MANAGEMENT

BENEFITS OF GCOS (Cont'd.)

* INTEGRATED SOFTWARE TO PROVIDE EFFICIENT USE OF SYSTEM RESOURCES FOR MANY USERS
* ALLOCATION OF TOTAL AVAILABLE MEMORY TO TIME SHARING GREATER THAN 256K grows according to number of users logged on
* SOFTWARE DISC CACHE BUFFER
* CONSOLE MANAGER FACILITY routes msg to specific console
* CONSOLE EDITORS create/modify BCI file
* INTERPRETED HISTORY REGISTERS ON SLAVE ABORTS
* GCOS III PROGRAM MEMORY ALLOCATION UP TO 255K PER PROGRAM
* ALLOCATION OF LARGE QUANTITIES OF FILES PER PROCEDURE
* INPUT/OUTPUT REQUESTS PER JOB INCREASED
* INTERRUPT PROCESSING BY ANY AVAILABLE PROCESSOR
* EACH COPY OF TSS CAPABLE OF SUPPORTING UP TO 400 USERS on 96 lines (4 copies max) on 1 comm processor
* THE TSS AFT SIZE (50 FILES) max 8 C.Ps
  ↓ AVAILABLE FILE TABLE
* UNIFIED PROFILE SYSTEMS (UPS) — converting databases
* COMMON SECURITY (CS) validates user

BENEFITS OF GCOS (Cont'd.)

* .MSECR MIGRATION (SECMIG)

* WWMCCS SECURITY DATABASE MANAGER (WSDBM)

* SEGMENT DESCRIPTORS

* PROCESSOR MODES

VOCABULARY

The vocabulary used to describe the operating system and the hardware follows.

The primary design of the operating system involves the

V I R T U A L M E M O R Y C O N C E P T

The management of this Virtual Memory is fully supported by the

V I R T U A L M E M O R Y A N D S E C U R I T Y

The VM and S hardware provides for the definition and management of up to 16 million words, 64 million bytes, of real memory and 2**41 words, 2**43 bytes of virtual memory.

VOCABULARY (Cont'd.)

This virtual memory must be considered as

S P A C E

A defined quantity is represented in GCOS 8 in units called:

P A G E S

A Page is:

1K — 1024 36 bit words
OR
4096 9 bit bytes

The space represented by a Page may be:

1. On Disk in an executable file called a

R U N U N I T

VOCABULARY (Cont'd.)

2. On Disk in a holding file called

B A C K I N G S T O R E

3. In an area of REAL Memory beginning on a 1024 word boundary. (1K)

4. Available. Not yet prepared.

Each Page of Space is identified by a

P A G E T A B L E W O R D

The Page Table Word defines the current identity of this Page of Space. The Page Table Word resides in a

P A G E T A B L E

A Page Table is some multiple of 64 Page Table Words. It May identify from 64 to 16384 Pages of Space.

VOCABULARY (Cont'd.)

There is a Page Table available for each

W O R K I N G S P A C E

A Working Space is an associated collection of Pages of Space identified by words in a single Page Table.

There are 512 Working Spaces available. Each Working Space is referred to be number in the range of Ø thru 777 octal.

A Page Table associated with a Working Space is defined in the

P A G E T A B L E D I R E C T O R Y

The Page Table Directory is a 512 word table in real memory.

VOCABULARY (Cont'd.)

The words in the table are called

P A G E T A B L E D I R E C T O R Y W O R D S

The Page Table Directory Words in the Page Table Directory are placed in the Working Space Number order when the Working Space is assigned to a task.

The Page Table Directory is pointed to by the

P A G E D I R E C T O R Y B A S E R E G I S T E R

The Page Directory Base Register is a modulo 512 memory address register. It is loaded during startup.

VOCABULARY (Cont'd.)

The components required to use these areas are contained in the

V I R T U A L A D D R E S S

A Virtual Address contains a Word/Byte value and an indication of the Working Space. The Word/Byte value, divided to 1024 words or 4096 bytes, provides a Page Number and an offset within the page.

The Virtual Address is created by the Hardware, by adding some VM and S Base Register to some offset obtained from the execution of an instruction.

VOCABULARY (Cont'd.)

The Space represented by one or more Pages may be further subdivided into areas called

S E G M E N T S

A Segment may be as small as one byte or as large as 256K words. Everything at the software level is defined in terms of segments.

The entity defining a Segment is called a

D E S C R I P T O R

A Descriptor consists of:

1. An indication of the Working Space
2. A Base Address within the Working Space
3. A boundary above the Base Address
4. Attributes of the segment

VOCABULARY (Cont'd.)

To be used by the software and recognized by the hardware, a descriptor must be placed in one of several VM and S

D E S C R I P T O R R E G I S T E R S

The VM and S mode of operation will use some Descriptor Register for every memory reference.

These registers are 72 bits in length and hold the entire Descriptor. There are 14 of these registers available to a task.

All of the Segments available to a task define the

D O M A I N

The Domain may include segments in several Working Spaces.

VOCABULARY (Cont'd.)

The definition of a task is all of the steps and procedures required to complete a

P R O C E S S / JOB

The Process, while in the system, is recognized, supported and maintained by a

K N O W N P R O C E S S I N D E X

The KPX is assigned when the Process becomes a candidate for execution and remains with the Process during all of the many possible

P R O C E D U R E S / Activity

A Procedure is one unit of a Process. A Process may consist of one or more Procedures. Each Procedure of a Process may be assigned a different Working Space during the execution of that Procedure.

VIRTUAL MEMORY

Virtual Memory (VM) provides an extremely large (3.5 trillion bytes), directly accessible memory space and a complement of registers and instructions to enable management of virtual address space. To provide for efficient management and control, the VM space is divided into variable length parts called "working spaces". The working spaces are further divided into variable size parts called "segments". A segment within a working space is described by a "segment descriptor", which has a base relative to the origin of the working space and a bounds above the base, together with control information. Thus, for all memory references, virtual memory addresses are prepared relative to a particular working space and a particular segment base within the working space.

The hardware environment for the virtual memory is composed of four elements; working spaces, pages, segments, and domains. The working spaces and pages are physical elements, whereas the segments and domains are logical elements. These elements are treated as separate components of the virtual memory but must be interpreted in the context of the whole environment, since they are closely related in their interaction with each other.

One main advantage is that separation of the logical and physical organization of memory allows information management and resource management to be separated.

SEGMENT-ORIENTED MODES

The GCOS 8 architecture supports two segment-oriented modes. The native mode of GCOS 8 is the multi-segment mode where procedures can consist of multiple segments -- some shareable, others private. Instructions and data are in separate segments. Demand paging is also available in this mode, although it can be avoided by providing sufficient real storage. Native mode provides the potential for extremely large programs and data storage. New compilers will be required to generate the segmented object units before this mode is available to the user. The single-segment mode serves two purposes. First, it accommodates GCOS 3 non-privileged user processes. Secondly, it provides for the continuing use of our GCOS 3 compilers and support software needed to support applications written for GCOS 3. All programs executed in single-segment mode are totally resident in real storage, although the page table concept allows them to be located in non-contiguous pages of real storage. Also, a GCOS 3 process running in accommodation mode has a maximum slave of 1024K bytes, since the operating system and slave service areas reside in different segments.

SECURITY PROTECTION FEATURES

- FOUR LEVELS OF POSITIVE PROTECTION

  1. DOMAIN LEVEL

  2. WORKING SPACE LEVEL

  3. SEGMENT LEVEL

  4. PAGE LEVEL

GCOS CONCEPTS

GCOS MEANS THROUGHPUT

- MULTIPROGRAMMING
- MULTIPROCESSING
- MULTIDIMENSIONAL
- ADVANCED TECHNOLOGY
  - DYNAMIC MEMORY ALLOCATION
  - DYNAMIC PERIPHERAL ALLOCATION
  - ONLINE PERMANENT FILE SYSTEM
  - PROGRAM SWAPPING
  - ACTIVITY COMPACTION
  - INTERNAL PRIORITY SYSTEM
  - CONDITIONAL EXECUTION
  - SIEVE LIMITS FOR RESOURCE ALLOCATION

GCOS CONCEPTS

o Multiprogramming

- DEFINITION: Concurrent execution of programs by one or more users of a computer system.

- Coordinated by supervisor in Operating System.

- Assigns priorities to users.
  -- Linear
  -- Round-Robin

- Assigns Resources
  -- Exclusive
  -- Sharable

o Multiprocessing

- Definition: More than one central processor within a system.

- May be two computers in system.

- Will be two or more central processors in one system.

- Greatly reduces processing time.

o Summary

Multiprogramming is the concurrent processing of many programs residing in memory to maintain the highest possible amount of a simultaneous input/output and to maximize processor use. Although only one program instruction may be executed at any time, I/O (Input/Output) operations may be performed for other programs while the single instruction is being executed.

Multiprocessing is two or more processors simultaneously executing programs in memory to gain greater throughput.

GCOS CONCEPTS

MULTIPROGRAMMING

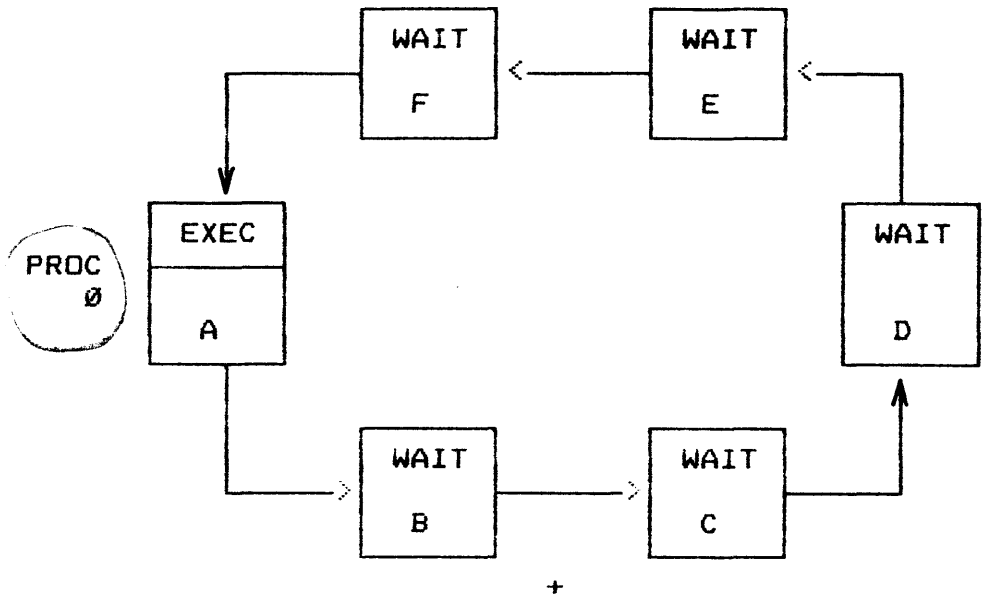

+

MULTIPROCESSING

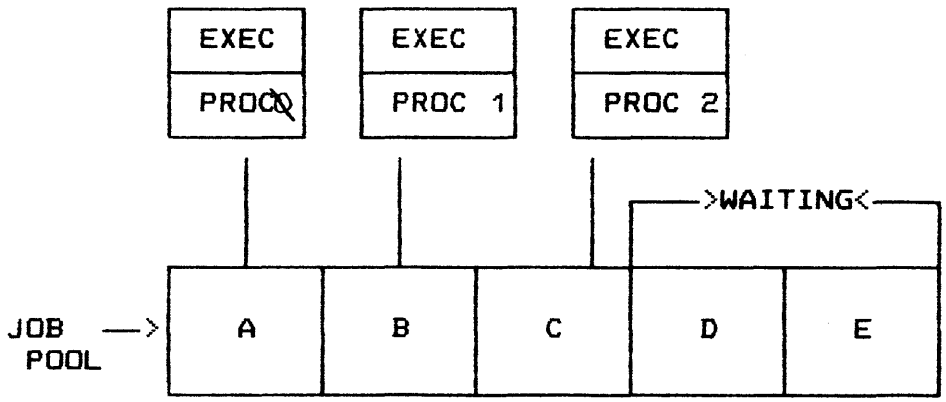

NOTE: A,B,C, ETC. REPRESENTS "JOB'S"

MULTIPROGRAMMING/MULTIPROCESSING

- UP TO 511 PROCESS NUMBERS AVAILABLE
- UP TO 477 FOR USER PROCESSES
- HIGHER MULTIPROGRAMMING DEPTH
- IMPROVED SYSTEM THROUGHPUT
- MAXIMUM USER PROCEDURE (PROCESS) 1024KB IN FIRST RELEASE
- NO DESIGNATED CONTROL PROCESSOR

GCOS CONCEPTS

- Program
  - Specific sequence of instructions whose execution will accomplish a desired task
  - Generally by convention
    - -- You write a program
    - -- Someone else writes and supplies software

- Software
  - Supplied programs written for computer systems

- Firmware
  - hardware program
  - software which has been "burned" into memory

- Operating System - General definition
  - Software which controls the hardware and supervises its own operations.

GCOS → General Comprehensive Operating Sup

GCOS SYSTEM FEATURES

- o CONCURRENT MULTIDIMENSIONAL OPERATION
- o MAXIMIZATION OF THROUGHPUT
- o SIMPLIFIED UTILIZATION

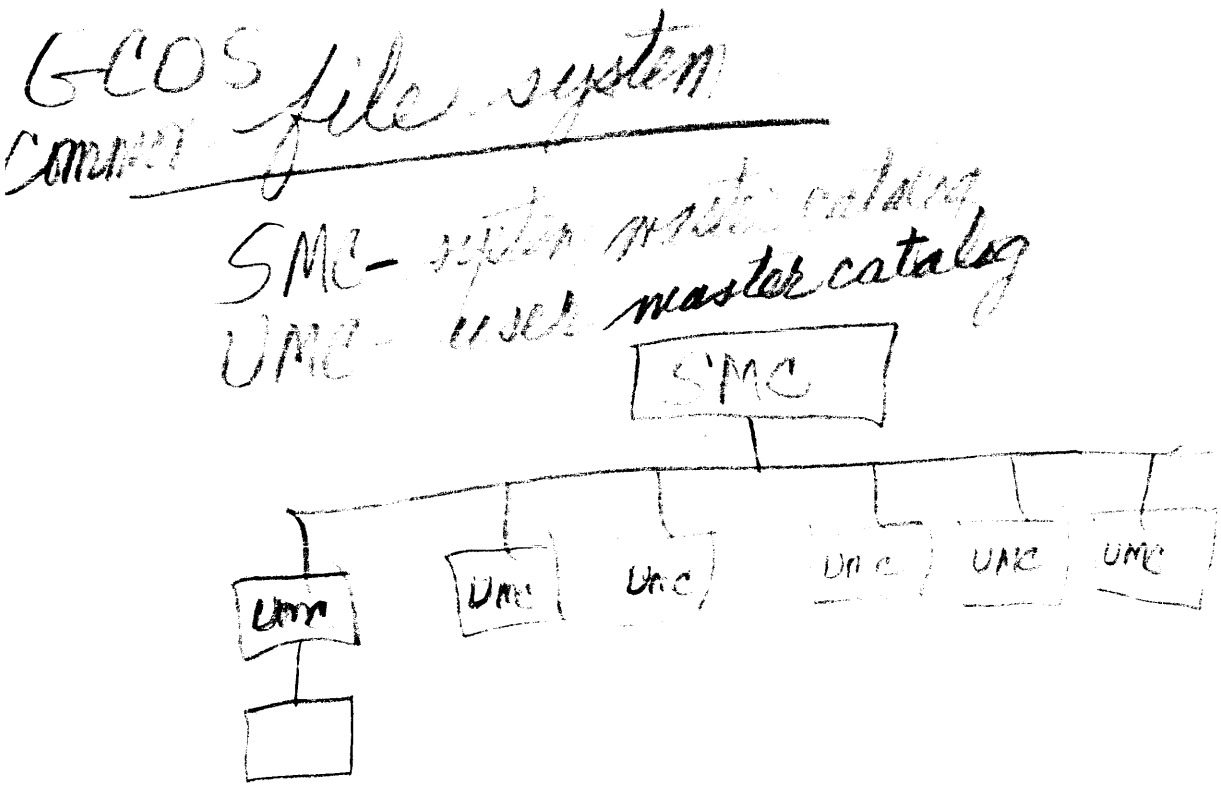

GCOS COMMON FILE SYSTEM

- ONE FILE SYSTEM
- COMMON TO ALL DATA MANAGEMENT TECHNIQUES
- ACCESSIBLE BY ALL DIMENSIONS

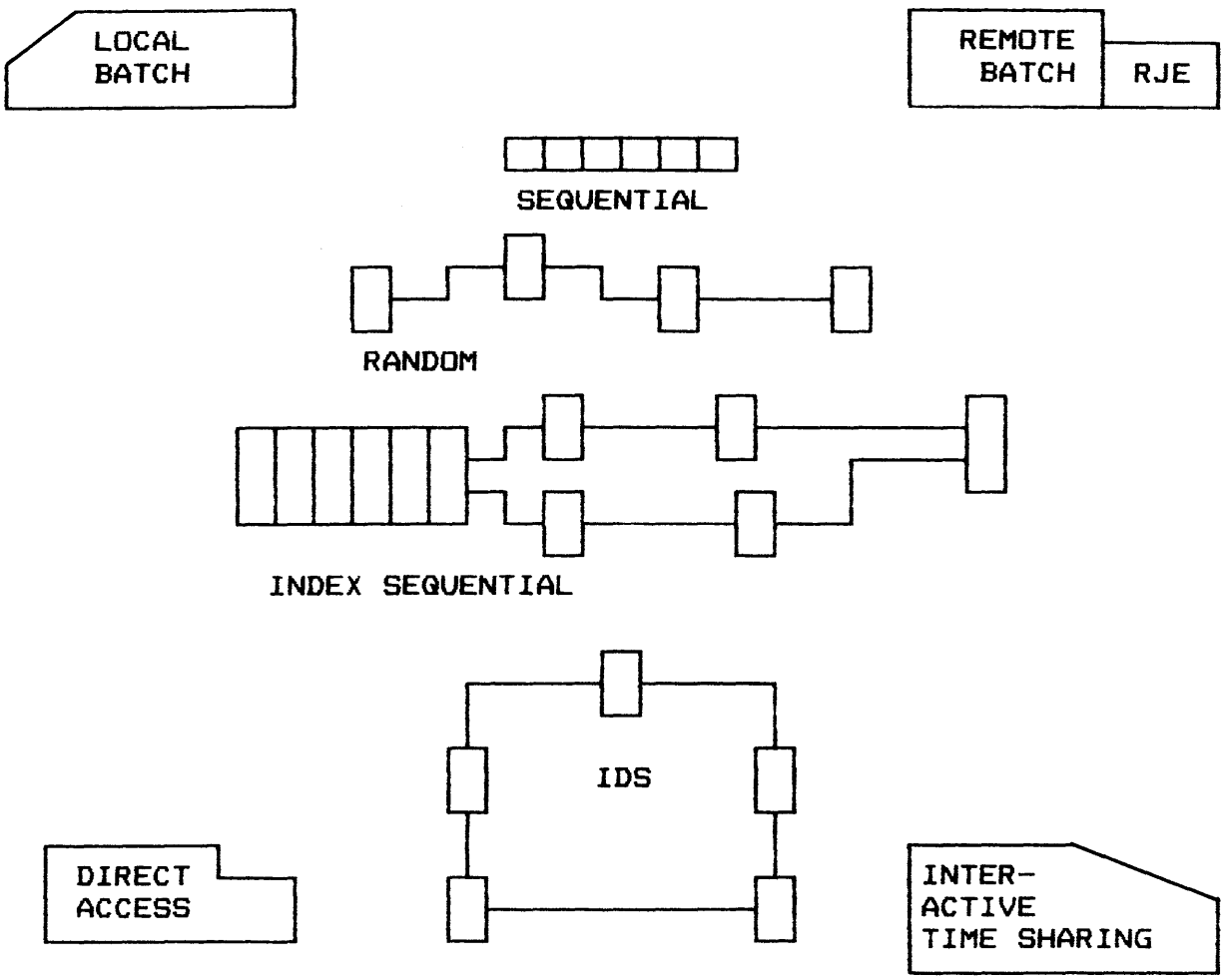

IDS - integrated data store

USER ORIENTED SOFTWARE

- LANGUAGE PROCESSORS
  - COBOL-74, COBOL-85
  - GMAP (ASSEMBLY LANGUAGE)
  - FORTRAN, FORTRAN-77
  - P/L1, P/L6 for ... 8

- DATA MANAGEMENT FACILITY
  - FMS - file mgmt supv
  - SMS shared mass storage
  - ISP indexed sequential
  - I-D-S/I, I-D-S/II integrated data
  - I-D-S DATA QUERY
  - MDQS mgmt data query sys
  - TDS, TPS

- UTILITY PROGRAMS
  - GENERAL LOADER
  - SORT/MERGE
  - BMC bulk media conversion
  - UTILITY, UTL2
  - SYSTEM EDITOR

- TIME SHARING SYSTEM
  - BATCH INTERFACE
  - TEXT EDITOR
  - BASIC, FORTRAN

FILE MANAGEMENT SYSTEM

- SHARED FILES
- CONTROLLED CONCURRENT ACCESS READING AND WRITING
- A FILE MAY EXCEED CAPACITY OF ONE PACK
- PERMANENT AND TEMPORARY FILES
- REMOVABLE MASS STORAGE FILES
- FILE SECURITY
- FILE INTEGRITY
- FILE MAINTENANCE

TIME SHARING SYSTEM

- T/S EXECUTIVE AND MODULAR SUBSYSTEMS
  - SUB ALLOCATES SPACE (SWAP AREA) to disk
  - SUB DISPATCHES PROCESSOR TIME
- TURNED ON OR OFF BY CONSOLE COMMAND
- INTERFACES WITH TTY AND/OR VIP TERMINALS
- VALIDATES USER IDENTIFICATION
- OPERATES CONCURRENTLY WITH BATCH AND RJE
- TREATED LIKE ONE PROGRAM TO GCOS
  - SWAPPED FROM MEMORY TO DISK BY GCOS

TIME SHARING SYSTEM (Cont'd.)

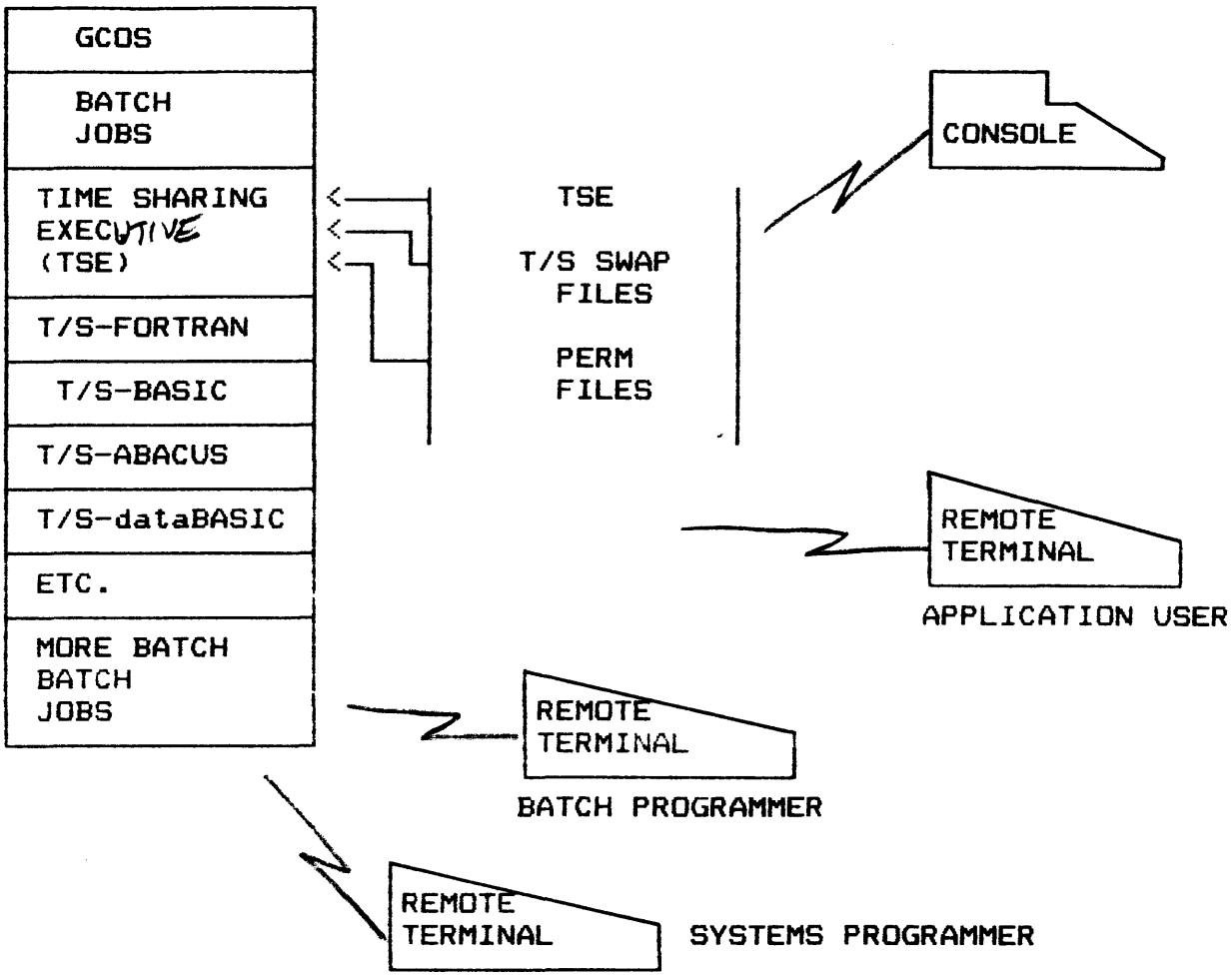

TIME SHARING SYSTEM (Cont'd.)

- INPUT BATCH PROGRAMS AND DATA

  CONVERT

- ACCESS AND MODIFY BATCH FILES

  DATA BASIC

  DATA QUERY

  CONVER

- EXECUTE BATCH PROGRAMS

  CONVER

- EXAMINE BATCH OUTPUT FILES

  JOUT Look at output

  EDITOR

  CONVER

- CREATE FILES

  ACCESS

  CONVER

- "REAL TIME" TURN AROUND

TRANSACTION PROCESSING SYSTEM

- TRANSACTIONS ENTERED IN REAL TIME
- TERMINAL OPERATOR NEEDS NO PROGRAMMING KNOWLEDGE
- ONLY DATA ENTERED AT TERMINAL
- PROCESSING INITIATED ON RECEIPT OF INPUT
- TRANSACTION PROCESSING EXECUTIVE (TPE)
  - INITIALIZED BY CONSOLE OPERATOR
  - JOURNALIZES ALL MESSAGES ON DISK
  - VERIFIES MESSAGE ID ON KEYWORD
  - MAY DIRECT OUTPUT TO ANOTHER DEVICE
  - CALLS TPAP PROGRAM INTO EXECUTION
- TRANSACTION PROCESSING APPLICATION PROGRAM (TPAP)
  - WRITEN BY USER
  - CAN BE WRITTEN IN ANY LANGUAGE
  - CAN INITIATE INPUT AND OUTPUT IN DIRECT ACCESS WITH A REMOTE TERMINAL
  - CAN CALL ANOTHER TPAP INTO EXECUTION

TRANSACTION PROCESSING SYSTEM (Cont'd.)

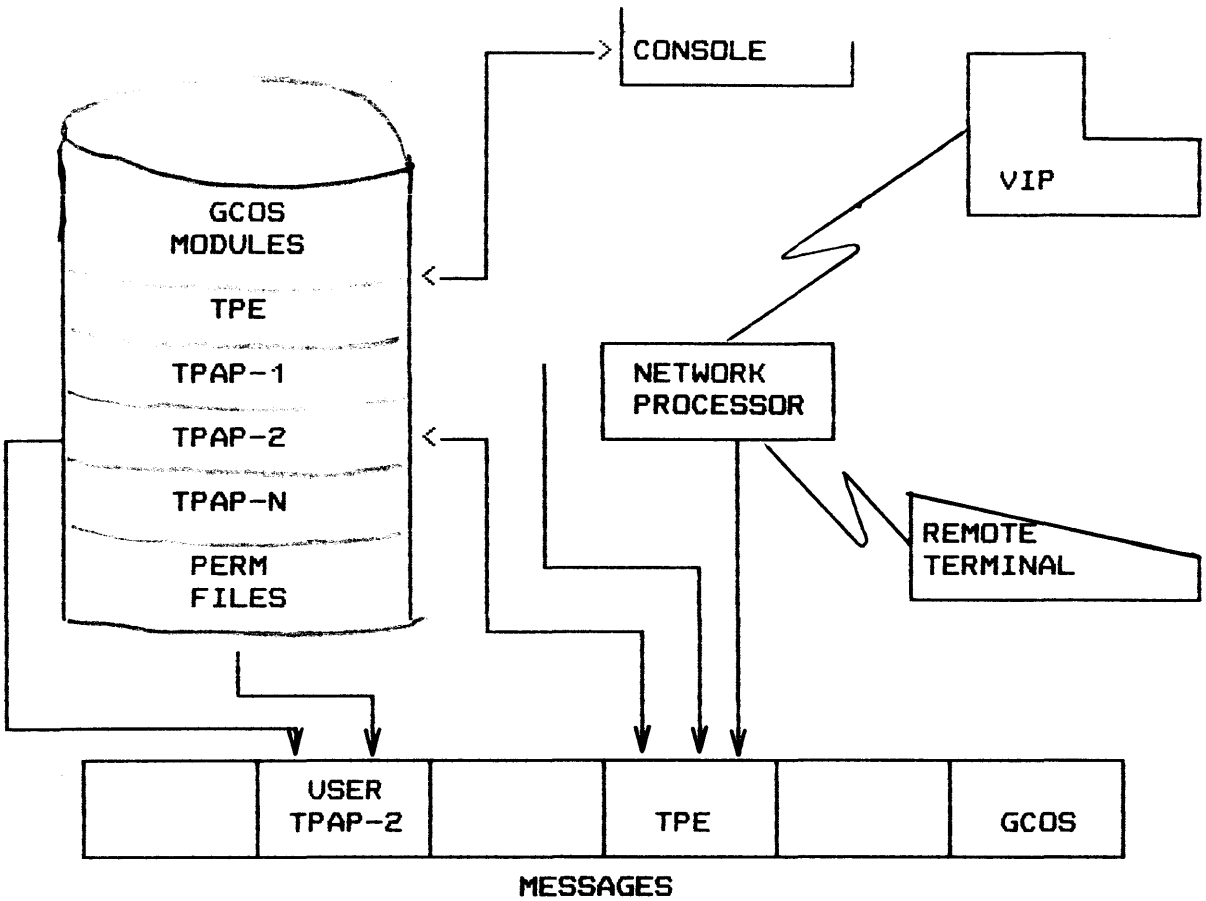

RELIABILITY/AVAILABILITY AIDS

- TOTAL ON-LINE TEST SYSTEM (TOLTS)
  - UNIQUE HARDWARE FEATURES
  - PROGRAMMABLE POWER SUPPLIES/TIMING MARGINS
  - PROVIDES TRANSIENT ERROR STATISTICS
  - LOCAL/REMOTE ACCESS
  - RUNS CONCURRENTLY WITH OTHER FUNCTIONS

COLTS - comm'd
POLTS - periphs
SOLT - system
MOLTS - mainframe

- ERROR LOGGING & ANALYSIS SYSTEM (ELAN)
  - OBTAIN A WIDE RANGE OF REPORTS ON SYSTEM HARDWARE OPERATION

- ELAN ERROR COLLECTOR

  COLLECTS AND STORES DATA TO PROVIDE REPORTS ON:
  - SYSTEM CONFIGURATION
  - SYSTEM ABORTS
  - CACHE MEMORY PARITY ERRORS
  - SYSTEM (PROCESSOR, SYSTEM CONTROLLER, AND MEMORY)
  - PERIPHERAL DEVICE (I/O) ERRORS
  - CONTROLLER STATISTICS
  - TAPE AND DISK MEDIA REPORTS

TOPIC II

PERIPHERAL OPERATION

Objectives: Upon completion of this topic, the student will be able to:

1. Perform power-up and power-down of controllers and peripheral devices.
2. Operate the controllers and peripheral devices.
3. Recover from hardware malfunctions and perform program restart.
4. Clear device malfunctions.
5. Define and set switches.
6. Mount/dismount tapes and disk packs.
7. Load/unload paper and cards in printers, readers, and punches.

UNIT RECORD DEVICES

CONTROLS

SPEED

CARD FORMAT

FEED AND READ

BIN CAPACITY

CHECKING FEATURES

SIMULTANEOUS OPERATION

PERIPHERAL OPERATION

UNIT RECORD DEVICES

CARD PUNCH

OPERATOR CONTROL PANEL

OPERATION MODES

CAPACITY

CHECKING FEATURES

SIMULTANEOUS OPERATION

CLEARING CARD JAMS

UNIT RECORD DEVICES

PCUØ121 CARD PUNCH

VERSATILITY

DATA INTEGRITY

OPERATOR CONTROLS

CARD JAM REMOVAL

RESTART

UNIT RECORD DEVICES

CCU0401/0402 CARD READER/PUNCH

VERSATILITY

DATA INTEGRITY

OPERATOR CONVENIENCE

IMPROVED SYSTEM AVAILABILITY

UNIT RECORD DEVICES

CRU 0600/CRU1050 CARD READERS

COMPACTNESS

URP DRIVEN

OPERATION

DATA INTEGRITY

SOFTWARE CONTROL

OPERATOR CONTROL PANEL

SOLID STATE/MECHANICAL RELIABILITY

CRU0600/1050 CARD READER

OPERATOR CONTROL PANEL

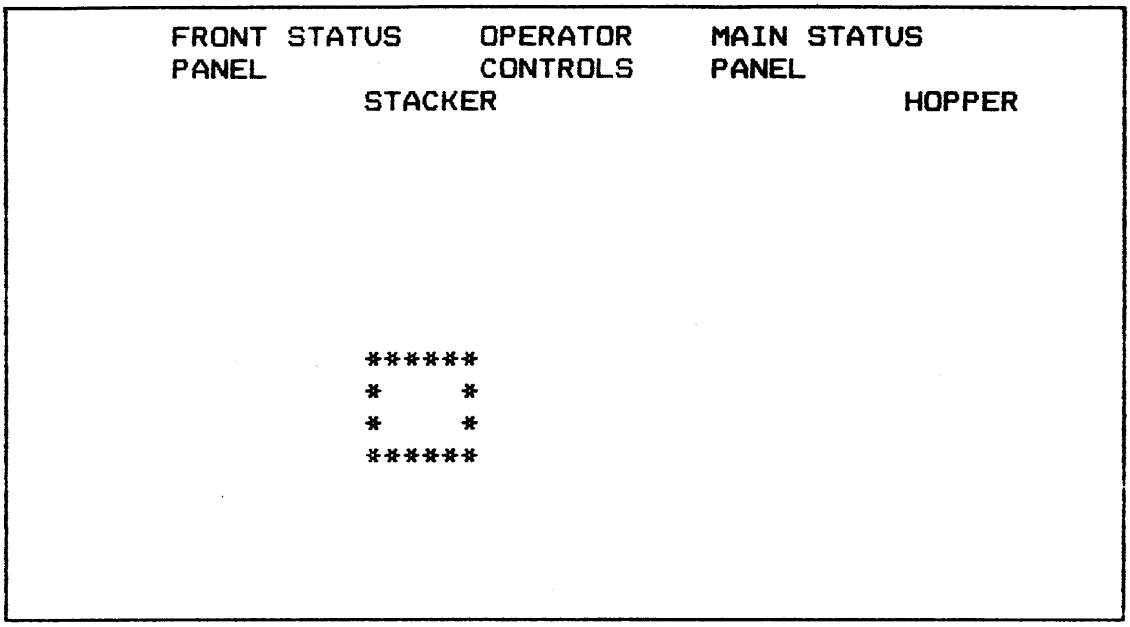

Control Panel Position

500/1050 CARDS/MIN
51/80 COLUMN CARDS

CRU0600/1050 CARD READER

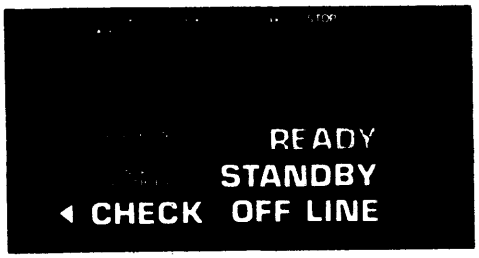

Main Status Panel Alert Indicators

Front Status Panel Alert Indicators

PERIPHERAL OPERATION

UNIT RECORD DEVICES

PRINTERS

CONTROL PANEL

LINE WIDTH

VERTICAL LINE SPACING

PAPER SKIPPING

VERTICAL FORMAT CONTROL

HORIZONTAL FORMAT CONTROL

PAPER HANDLING

PRINT MODES

CHECKING FEATURES

PRU 1200/1600/0901/1201

FEATURES

- High speed
- Exceptional print quality
- High throughput and reliability
- Improved System Availability
- Versatility
- Print Belts
- Operator efficiency
  - Control Panels
    - Main
    - Auxiliary
    - Maintenance

PERIPHERAL OPERATION

TAPE SUBSYSTEM

MTP DRIVEN MTU400/0500/0600

PROGRAMMED OPERATION

DATA PROTECTION

FEATURES

- AUTOMATIC THREADING
- AUTOMATIC TAPE CLEANING
- POWER WINDOW

SEMI/AUTO SWITCH

SAFETY BAR

TAPE SUBSYSTEM

MTP DRIVEN MTU'S

OPERATING PROCEDURES

POWER-UP SEQUENCE
- WITH CARTRIDGE
- WITHOUT CARTRIDGE

MANUAL THREADING

FAILURE OF AUTO THREADING

- STATIC CONDITION
- BOT PATCH
- ABUSIVE TREATMENT/CARTRIDGE, REEL
- DEFECTIVE LEADER

TAPE UNLOADING

MASS STORAGE

GENERAL DESCRIPTION

SUBSYSTEM CONFIGURATION

SUBSYSTEM COMPONENTS

DISK STORAGE CONTROLLERS
(MSP/MPC)

DISK PACK DRIVES

DISK PACK

OPERATING CONTROLS

LOGICAL CHANNELS

AVAILABILITY/RELIABILITY/MAINTAINABILITY (ARM)

- DUAL CHANNEL MSPS
- ONLINE ISOLATION TEST ROUTINES (ITR)
- POLTS
- AUTOMATIC ERROR RECOVERY
  - AUTOMATIC I/O RETRY
  - ERROR DETECTION AND CORRECTION (EDAC)

CROSSBARRING

MASS STORAGE

MSU0402/0451/ MASS STORAGE SUBSYSTEM

DISK STORAGE CONTROL

MASS STORAGE PROCESSOR

DISK PACK DRIVES

2 TO 16/CONTROL

TO 32 WITH DUAL CONTROLS

DISK PACKS

12 DISKS

19 DATA SURFACES/808 CYLINDERS

235 MILLION 6-BIT CHARACTERS/PACK

158 MILLION 9-BIT BYTES/PACK

MASS STORAGE

MSU0500/0501 MASS STORAGE SUBSYSTEM

DISK PACK DRIVES

1-8 UNITS/CONTROLLER

TO 15 UNITS WITH DUAL CONTROLLER

(2 SPINDLES PER UNIT)

DISK PACKS

PLATTERS FOR HDA	12
RECORDING SURFACES PER HDA	19
DISK UNIT (2 SPINDLE) CAPACITY	1-7 BILLION 6-BIT BYTES
	1.1 BILLION 9-BIT BYTES
DISK SUBSYSTEM CAPACITY	16.5 BILLION 9-BIT BYTES
	24.7 BILLION 6-BIT BYTES
NUMBER CYLINDERS PER UNIT	1680
SECTORS PER TRACK	8

PERIPHERAL OPERATIONS

CONSOLES:

- PURPOSE
- TYPES OF COMMUNICATION
- CONVENTIONS ADAPTED
- OPERATOR RESPONSE
- OPERATOR INPUT

CONSOLE:

CSU6001 FREE-STANDING CONSOLE

OPERATOR'S PANEL

INPUT/OUTPUT TYPEWRITER CONTROLS

SYSTEM STATUS DISPLAY

CONSOLE MAINTENANCE PANEL

CONSOLE

CSU6004(AB1) CONSOLE

CONSOLE OPERATOR PANEL

CONSOLE SECTION

SYSTEM SECTION

CONSOLE KEYBOARD
(TYPEWRITER)

PRINTER CONTROLS

CONSOLE

CSU6005 SYSTEM CONTROL CENTER

COMPONENTS

OPERATOR PANEL

CONFIGURATION PANEL

KEYBOARD

DISPLAYS

PRINTER

H6000 DPS CONSOLE

CSU6601 SYSTEM CONSOLE

- ONE REQUIRED
- CRT ORIENTED
- HARD COPY PRINTER
- INTERFACE TO DPU
  (DIAGNOSTIC PROCESSOR UNIT)
  FOR MAINFRAME
- SWITCHABLE BETWEEN IOM'S
- KEYBOARD

CSU6601 KEYBOARD

SPECIAL PURPOSE KEYS

COMMAND	DESCRIPTION
break	Port Request - (Change control of terminal from remote to local or vise-versa)
ctl-a	Abort Output/Wait (Maint mode only)
ctl-∂	Backspace
ctl-x	Operator Error (Cancel input)
esc ctl-b	System Boot-Load (Load system)
esc ctl-f	Load Firmware DPS8/20 or 44 (DPU)
esc ctl-i	System initialize (Total system initialization must be followed by (CR))
esc ctl-r	DPU Initialize DPS8/20 or 44 will re-initialize DPU
return	Operator Request (when system is idle or running)
return	End-of-message (when inputting msg.)

NOTE: CTL-? INVOLVES two separate key strokes

i.e., Hold down CTL key and press a key.

CONSOLE

VIDEO AND VIP INTERFACE WITH SYSTEM CONSOLE

LOGON FOR VIDEO DISPLAY

VIDEO DISPLAY

VIDEO OPTIONS

VIDEO DISPLAY CONTENT

DISPLAY FORMAT

VIDEO data is displayed at either the status display console and/or at VIP terminals that are connected to the VIDEO program. The VIDEO display is formatted in five columns as illustrated.

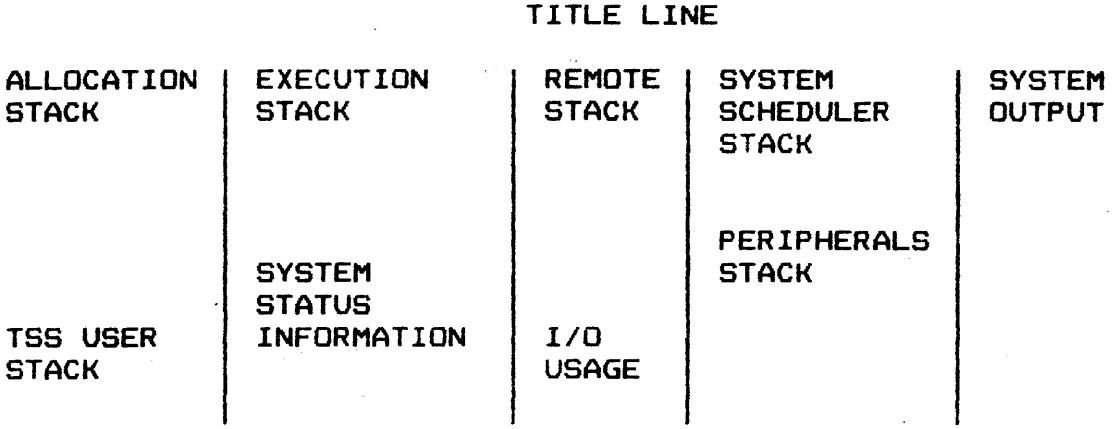

The information displayed in each of the display fields is described separately. If the number of entries in either the allocation, execution, or system output stack exceeds the display line limit, **MORE** displays as the last line. Excess entries are included with the next display change.

PERIPHERAL OPERATION

VIDEO DISPLAY CONTENT

DISPLAY FORMAT

The below illustrates formatted system status information reported by the VIDEO program.

```
 SYSTEM STATUS  SYS_ID     3000        2 PROCESSORS 1024K    12/03/87
13.233
WAITING-  14    EXEC-  13    MU  %% URG  RMTS-   2   SCHED-  1-     SYOT 170/  36
  0435Z-01 ALC : $SCALC       5:  2:    : JO STOLT 0 :.HOLD    1   : 6670T 0    J
  0437Z-01 ALC : $PALC       41:  5:31  : XX VIDEO 1 :             : 6697T 0    J
  0436Z-01 ALC : $GEOT       31:  0:62  : G1 VIDEO 1 :             : 6759T 0    J
  0425Z-02 PER : $SCHD       26:  0:62  :            :             : 6822T 0    J
  0426Z-02 PER : $RGIN       10:  0:62  :            :             : 6870T 0    J
  0427Z-02 PER : TS1$ -01    60:  1:61  :            :             : 6896T 0    J
  0438Z-01 ALC : $PSYS-00    13:  0:63  :            :             : 6905T 0    J
  0432Z-01 ALC : $GSYS        9:  0:59  :            : PERIPHERALS : 6923T 0    J
  0432Z-01 ALC : X    -01    13:   :60  :            :   ST6-RLSED : 6930T 0    J
  0439Z-01 ALC : SHARD-01   182:  0: 5  :            :   LP1-RLSED : 6975T 0    J
  0429Z-02 PER : 0424Z-02    21: 12: 5  :            :   LP2-RLSED : 6937T 0    J
  0428Z-00 ALC : 0434Z-01    32:   : 5  :            :   1T1-      : 6984T 0    J
  0430Z-01 ALC : 0417Z-02    21: 22: 5  :            :   1T2       : 6990T 0    J
  0431Z-00 ALC :                        :            :   1T3-      : 6993T 0    J
           *   :                        :            :   1T4-      : 6997T 0    J
           *   :                        :            :   1T5-      : 7104T 0
           *   :                        : FMS%-  71  :   PR3-RLSED : 7211T 0
           *   :                        : TAP%-  49  :   CR5-RLSED : 7281Z 0    J
           *   :                        : DSK%- 163  :   PR1       : 7283T 0    J
 TSS-  2 ( 1.0):                        : JOBS-  42  :   PR2-DEDCT : 7399T 0    J
URG  0 WAIT  0 : IDLE-      304   9:    : TAPES-  5  :   CR1-      : 7467T 0    S
GETON      GH 1: GCOS-      131: 40:    : DISK-  10K :   CP1-RLSED : **MORE**
```

VG. [illegible]

*= Priority over 4Ø

e.g. 0477Z-01 *ALC

Scheduler Group
- EXPT
- HOLD
- [illegible]

49 [illegible]

PERIPHERAL OPERATION

MANUAL PERIPHERAL SWITCH

FUNCTION

SWITCH PERIPHERAL DEVICE BETWEEN URP'S

SWITCH PERHPHERAL DEVICE BETWEEN IOM'S

OPERATOR CONSOLE

BENEFITS

DISK MEASUREMENT

5 LINKS = 1 BLINKS
Big Link

12 LLINKS = 1 LINK / SIZE

320 WORDS = 1 LLINK / BLOCK
Little Link

PERIPHERAL MAINTENANCE

RESPONSIBILITIES

- OPERATOR
- FIELD ENGINEER (FE)

FREQUENCY OF CLEANING

RM vs PM

DOWNTIME REPORTING

- NOTIFICATION
- FORMS REQUIRED

PERIPHERAL MAINTENANCE

PUNCH CARD EQUIPMENT

1. REMOVE ACCUMULATED CARD DUST
2. EMPTY CHAD BOX
3. WIPE OUTSIDE OF CABINET

PERIPHERAL MAINTENANCE

PRINTERS

GENERAL VACUUMING

CONTROL PANEL INDICATOR LAMP CHECKING

PRINT QUALITY CHECKING

RIBBON CHECKING

PAPER STACKER

CHANGING/ADJUSTING PRINT BELT CARTRIDGE

PERIPHERAL MAINTENANCE

MAGNETIC TAPE UNITS

AFTER 8 HOURS OF OPERATIONS, CLEAN ALL SURFACES THAT COME IN CONTACT WITH TAPE.

CLEAN READ/WRITE HEAD

CHECK AND REPLACE DEFECTIVE CONTROL PANEL BULBS

CLEAN TAPE GUIDES

CAPSTAN

IDLER ROLLERS

AIR FILTERS

TAPE CLEANER AND GUIDE ASSEMBLIES

INSIDE OF VACUUM COLUMNS

INSIDE OF DOOR

BOT/EOT SENSORS

LOAD RAMPS

HUB

PERIPHERAL MAINTENANCE

DISK UNITS

OPERATOR SHOULD KEEP CABINETS CLEAN AND FREE OF DUST

CLEAN PACK

CLEAN GLASS COVER

REPLACE PRIMARY FILTER

SHROUD AND SPINDLE

DISK PACK COVERS

TOPIC III

H6000 CONSOLE SIMULATOR

Objectives: Upon completion of this topic, the student will be able to:

1. Describe the function and operation of user terminals.

2. Perform log-on and log-off of the Time Sharing System (TSS).

3. Communicate with the TSS to complete simulator workshops.

TELETYPEWRITERS (TTY)

FUNCTION

KEYBOARD

SPECIAL CHARACTERS

- DELETE A CHARACTER
- DELETE A LINE

LOGON PROCEDURES

AUTOMATIC TERMINAL DISCONNECT = 10 minu

LOGOFF PROCEDURES

TTY LOG-ON/LOG-OFF

EXAMPLE

```
0316600
PROGRAM NAME-TS1
TERMINAL C7
LOG-ON
L


*_____
 _____
 _____
* BYE          (LOG-OFF)
```

@ = delete previous character
control-X = delete entire line
control-C = break connection

VISUAL INFORMATION PROJECTION (VIP)

FUNCTION

KEYBOARD

DATA DISPLAY AND TRANSMISSION

SPECIAL KEYS

LOGON PROCEDURES

LOGOFF PROCEDURES

VIP LOG-ON/LOG-OFF

EXAMPLE

```
$5,TSS
  or
$**$LOG22L,TS1  (for 786W)   $**$LOG24,TS1   (for 7705)
TERMINAL E9


* ____
  ____
  ____
* BYE       (LOG-OFF)
```

VIP/TTY LOG-ON/LOG-OFF

SECURITY LEVELS AND LOG-ON OPTIONS

LOG-ON PROCEDURES:

When you LOG-ON from a TTY terminal you get the line address followed by "PROGRAM NAME - ". The response "TSS" will net other results. When logging on with a VIP or VIP Emulator you type "$5,TSS" or whatever is normal at your site. The response from the system will be different depending on whether or not security is active.

If security is not enabled, the response from the system is:

HIS TIMESHARING ON MM/DD/Y AT HH.SSS CHANNEL XXXX TSn

USERID --

To which you respond: userid$password

If security is enabled, the response from the system is:

Please LOG-ON.

To which you will respond depending on the level of security in effect.

SECURITY LEVELS AND LOG-ON OPTIONS

If the $ SECURE card has ACCESS, you respond:

L -USR userid -PW password

WHERE: L means login

-USR is the flag for the userid followed by the userid you wish to log on to

-PW is the flag for the password as it exists in the SSM database.

If the $ SECURE card has SCC, you respond:

L -USR userid -PW password -SCC xxx

WHERE: L means login

-USR is the flag for the userid followed by the userid you wish to log on to

-PW is the flag for the password as it exists in the SSM database.

-SCC is the flag for the security classification code you wish current for this session.

SECURITY LEVELS AND LOG-ON OPTIONS

If the $ SECURE card has CAVEAT, you respond:

L -USR userid -PW password -SCC xxx -CAV xxx

WHERE: L means login

-USR is the flag for the userid followed by the userid you wish to log on to

-PW is the flag for the password as it exists in the SSM database.

-SCC is the flag for the security classification code you wish current for this session.

-CAV is the flag for the security classification to be associated with output generated for this session.

If the $ SECURE card has SYSTEM, you respond:

L -USR userid -PW password -SCC xxx

WHERE: L means login

-USR is the flag for the userid followed by the userid you wish to log on to

-PW is the flag for the password as it exists in the SSM database.

-SCC is the flag for the security classification code you wish current for this session.

SECURITY LEVELS AND LOG-ON OPTIONS

If the $ SECURE card has PID or PIC but not SCC or CAVEAT, you respond:

L -PER person-id -PIC person-identification-code -PJ project

WHERE: L means login

-PER is the flag for the Person-Id followed by your person-id.

-PIC is the flag for the Person Identification Code assigned to your Person-Id to be followed by the actual code.

-PJ is the flag for the project you wish to have access to followed by the project name.

If the $ SECURE card has PID or PIC and SCC or CAVEAT, you respond:

L -PER person-id -PIC person-ident-code -PJ project -SCC xxx

SECURITY LEVELS AND LOG-ON OPTIONS

WHERE: L meand login

-PER is the flag for the Person-Id followed by your person-id.

-PIC is the flag for the Person Identification Code assigned to your Person-Id to be followed by the actual code.

-PJ is the flag for the project you wish to have access to followed by the project name.

-SCC is the flag for the security classification code you wish current for this session.

-CAV is the flag for the security classification to be associated with output generated for this session.

Additional LOG-ON options are:

-BA which is a billing account number to replace the first field of the default ident (if enabled).

-STR which is up to 32 bytes of user data.

-IDENT Enter the LOG-ON ident. This field is OPTIONAL if the default IDENT is active and is valid. This field is not optional if the default IDENT is <u>not</u> active. When you enter IDENT data, it must be enclosed in apostrophes (*) if it contains blanks.

CONSOLE EXERCISE

1. Log on using the USERID and Password given to you by your instructor.

   i.e., HNYCLASS $PASSWORD

   classification of your output

   ZZZ

   classification of files you will create

   UZZ

2. Enter the following command:

   BRN HONEYWELL/OPERATOR/608/..INIT,R

3. The INIT program will issue instructions for the lessons.

4. Follow these instructions to proceed.

TOPIC IV

CONSOLE MESSAGES (HARDWARE) WWMCCS UNIQUE

Objectives: Upon completion of this topic, the student will be able to:

1. Use console input/output messages to communicate with GCOS to check status of system components and peripherals.

2. Perform recoveries through use of the General Exception Processing Routine (GEPR).

80 char x 24 lines

GENERAL RULES FOR MESSAGES

BECOME FAMILIAR WITH CONVENTIONS ADOPTED FOR ENCODING OPTION CHOICES, IF APPLICABLE, USED WITH INPUT VERBS. IF IN DOUBT, LOOK IT UP...REMEMBER, YOU ARE WASTING YOURS AND THE SYSTEM'S TIME WHEN YOU ENTER SOMETHING THAT IS INVALID FOR ANY REASON.

Become familiar with conventions.

Types of messages
- Input messages
- Output messages for information only
- Output messages requiring operator action

Message convention
- Input format
- Output format
- Margins
- Length of messages

Device types
Variables
Non-standard
Standard
- Variable designators

Standard abbreviations

OPERATOR INPUT MESSAGES

Operator initiated
System initiated
Operator Reply/Input/Error Correction
   CSU6001/6002/6005/6601
System Verbs
Remote Maintenance Console Verbs
Limitations

SYSTEM OUTPUT MESSAGES

CONCERNING OUTPUT MESSAGES...INTERPRET PROPERLY. RESPOND, IF A RESPONSE IS REQUIRED, PROMPTLY. AGAIN, YOU ARE WASTING THE SYSTEM'S TIME WITH IMPROPER RESPONSES. ALSO, SOME ACTIVITY THAT IS IN PROGRESS IS BEING DELAYED. IN SOME CASES, IMPROPER RESPONSES CAUSE DISASTROUS RESULTS. IF IN DOUBT, LOOK IT UP.

Messages of Record
- Format for Activity Progress

Peripheral Device and Input/Output Controller Messages
- Format
- Implicit Options
- Explicit Options

HARDWARE VERBS

RLSE	RELEASE A PERIPHERAL FROM THE SYSTEM.
ASGN	ASSIGN A DEVICE TO THE SYSTEM.
DCHNL	DEACTIVATE A CHANNEL.
ACHNL	ACTIVATE A PREVIOUSLY DEACTIVATED CHANNEL.
RLSEI	RELEASE AN IOM FROM THE SYSTEM.
ASGNI	ASSIGN AN IOM TO THE SYSTEM.
RLSEP	RELEASE A PROCESSOR FROM THE SYSTEM.
ASGNP	ASSIGN A PROCESSOR TO THE SYSTEM.
DEDCAT	DEDICATE A DEVICE.
UNDED	REMOVE DEVICE FROM DEDICATED STATUS.
NAME	NAME A DEVICE.
UNAME	REMOVE A NAME FROM A DEVICE.
MOVE	MOVE ALLOCATION ON ONE DEVICE TO ANOTHER.
EXCHG	EXCHANGE SPECIFIED DEVICE FOR ANY OTHER LINE DEVICE.
PSTATS	STATUS OF PERIPHERAL DEVICE.
MASFG	LIST SYSTEM MASS STORAGE RESOURCES.
DLINK	REQUEST LISTING OF UNAVAILABLE LLINKS ON A SPECIFIC MASS STORAGE DEVICE.
TAPFG	LIST SYSTEM TAPE CONFIGURATION.
TYPFG	LIST CURRENT SYSTEM CONFIGURATION.
CSTATS	REQUEST STATUS OF A PARTICULAR CHANNEL.
PTRAIN	TO CHANGE PRINT TRAINS.
VFC	TO LOAD A SPECIFIC VFC IMAGE.
ESTATS	REQUESTS ERROR STATUS OF A PERIPHERAL.
RLSEC	RELEASE MEMORY FROM ACTIVE ALLOCATION.

HARDWARE VERBS (Cont'd.)

ASGNC	ASSIGN RELEASED MEMORY FOR ACTIVE ALLOCATION.
REEL	RESPONSE TO SYSTEM MESSAGE "REEL XX".
TCLASS	CHANGE CLASS NUMBER OF SPECIFIED TAPE DRIVE.
LOOK	DISPLAY CONTENTS OF A PARTICULAR MEMORY LOCATION
SNAP	DUMP CONTENTS OF MEMORY ONTO SYSOUT OR SCF FILE.
CHANGE	MODIFIES THE CONTENTS OF A SPECIFIC LOCATION AFTER A VALIDITY CHECK.
~~CHANGF~~ CHANGF	MODIFIES CONTENTS OF A SPECIFIED LOCATION WITHOUT A VALIDITY CHECK.
DDTAPE	USED TO REQUEST A MAGNETIC TAPE DEVICE TO BE ASSIGNED TO A SPECIFIC SNUMB.
LDTAPE	LISTS ON CONSOLE OF ALL TAPE DRIVES CURRENTLY ASSIGNED BY THE DDTAPE VERB.
UDTAPE	OPERATOR REQUEST THAT A MAGNETIC TAPE DRIVE PREVIOUSLY ASSIGNED TO A PROGRAM BE RELEASED BACK TO THE SYSTEM.

MISCELLANEOUS VERBS

DATE	CHANGE THE SYSTEM DATE.
TIME	CHANGE THE SYSTEM TIME.
VOCAB	LISTS HONEYWELL-SUPPLIED CONSOLE VERBS.
VOCABU	LISTS SITE-DEFINED CONSOLE VERBS.
HIST	LISTS SYSTEM COUNTER TOTALS.
HISTRE	LISTS SYSTEM COUNTER TOTALS AND RESETS COUNTERS TO ZERO.
VIDEO	OPERATOR RESTORES VIDEO PROGRAM DISPLAY.
LIST	SIEVE LIMITS, NAMED DEVICES, RELEASED DEVICES.
LSTCT	LISTS JOBS IN EXECUTION, SYSOUT, SCHEDULER.
LSTRT	LISTS ALL REMOTE JOBS.
HOLD	PLACES A JOB IN THE HOLD CLASS QUEUE.
RUN REST	STARTS JOB EXECUTION FOLLOWING RESTART.
WORKST	REQUEST TO LIST OR ABORT KNOWN WORKSTATIONS.
MSG	CAUSES A SPECIFIED MESSAGE TO BE PRINTED ON ALL EXECUTION REPORTS.
TRACE	SYSTEM TRACE TO BE TURNED OFF/ON.
GRANT	OPERATOR REQUESTS RUNNING OF A SPECIFIED PRIVITY JOB.
BOOT	OPERATOR REQUESTS A REBOOT OF THE SYSTEM WHEN GCOS IS IN MEMORY.
DUMP	OPERATOR REQUESTS SYSTEM TO PERFORM A MASTER MODE DUMP.
FASTBT	OPERATOR REQUESTS THAT THE AUTOMATIC RESTART CAPABILITY BE TURNED EITHER ON OR OFF.
TEXT	CAUSES STARTUP CONSOLE EDITOR TO BE CALLED.
LAUTO	REQUEST A LIST OF THE BCD CARDS IN THE AUTOLOAD FILE BE PRINTED.

DATANET VERBS

ACALL	OPERATOR REQUESTS THAT THE FRONT-END NETWORK PROCESSOR (FNP) START ACCEPTING CALLS.
NCALL	OPERATOR REQUESTS THAT NO FURTHER CALLS BE ACCEPTED FROM THE REMOTE TERMINALS CONNECTED TO THE FNP.
TCALL	OPERATOR REQUESTS THAT CALLS FROM THE FNP BE TERMINATED.
LINES	OPERATOR REQUESTS THE STATUS OF REMOTE TERMINALS CONNECTED TO THE FNP.

TSS VERBS

TSn STRT	INITIATES THE TIME SHARING SYSTEM.
TSn KILL	OPERATOR REQUESTS THAT THE TIME SHARING SYSTEM BE TERMINATED.
TSn NONEW	TIME SHARING WILL NOT ALLOW NEW USERS.
TSn NEW	ALLOW NEW TIME SHARING USERS.
TSn SIZE	SET MAXIMUM MEMORY SIZE FOR TIME SHARING.
TSn MESS	SEND MESSAGE TO TERMINALS.
TSn LAST	DISPLAY TIME SHARING MESSAGE ON OPERATOR CONSOLE.
TSn WARN	WARN TIME SHARING USERS WHEN TIME SHARING WILL BE TERMINATED.
TSn MIN	SETS MINIMUM SIZE OF TSS.
TSn MSON	PERMIT MASTER USERID TO LOG ON.
TSn MSOF	DENY MASTER USERID TO LOG ON.
TSn SPEC	INTERRUPT TSS, SEND MESSAGE TO USER.
TSn STAT	DISPLAY TSS STATUS ON CONSOLE.
TSn TCAL	TERMINATE USER OR TERMINAL.
TS0 ABORT	ABORT THE TSn ADMINISTRATIVE PROGRAM (SNUMB TSn AD) AND ALL TSn PROCESSES.
TS0 CANCEL	CANCEL ALL MESSAGES IN MESSAGE BUFFERS.
TS0 RESTRT	RESTARTS TSn SYSTEM (USED FOLLOWING TSn TERM OR TSn STOP).
TS0 SNAP	REQUEST SNAPSHOT DUMP OF APPLICABLE TSn DATA AREAS.
TS0 VOCAB	LISTS ALL TSn INPUT VERBS
TS0 WHO	LISTS STATUS OF ALL TSn PROCESSES AT THE CONSOLE.
TSN EXTEND	PRESERVES STATE OF USERS SESSION FOR A SITE DEFINED LENGTH OF TIME IN ANTICIPATION OF A RECONNECT REQUEST.

TP VERBS

TP DETL	DETAILED REPORT OF ACTIVITIES TO DATE.
TP MESS	SIMILAR FUNCTION TO TS1 MESS.
TP NEW AND TP NONEW	SIMILAR FUNCTION TO TS1 NEW/NONEW.
TP STAT	SUMMARY STATUS OF ACTIVITIES TO DATE.
TP STAT ID	SPECIFIC STATUS BY TPAP IDENTIFIER.
TP STRT	REQUEST TO LOAD AND RUN TPE.
TP TERM	ACCEPT NO NEW INPUT, TERMINATE WHEN CURRENT ACTIVITIES FINISH.
TP TERM ID	TERMINATE ACTIVITY IDENTIFIED BY TPAP ID.
TP BOMB	SET/RESET INDICATORS TO PRINT OR NOT PRINT THE ABORTED TRANSACTION NUMBERS.
TP OUT	TRANSACTION BE FORMATTED, IDENTIFIED AND OUTPUT ON CENTRAL SITE PRINTER.
TP REDI	REDIRECT OUTPUT FROM ONE LOGICAL CHANNEL TO ANOTHER.
TP REST	RESPAWN A TPAP SO IT CAN START ACCEPTING TRANSACTIONS.
TP SICT	PRINT THE COUNT OF THRESHOLD ERROR CONDITIONS.
TP STAF	STATISTICS BE WRITTEN TO SCF.

ACCOUNTING VERBS

ACCEPT	WRITE A SPECIFIED RECORD TYPE TO THE SCF.
ACCNT	CLOSE OLD STATISTICAL COLLECTION FILE AND OPEN A NEW ONE.
ACSTAT	DISPLAY ON CONSOLE PRESENT DISPOSITION FOR ALL STATISTICAL COLLECTION FILE RECORD TYPES.
AUDIT	WRITE A MESSAGE TO THE SCF. USED AS AN AUDIT TRAIL.
IGNORE	DO NOT WRITE A SPECIFIED RECORD TYPE TO THE SCF.
TRACE	TURN SYSTEM TRACE ON OR OFF.

PAGE PRINTING SYSTEM VERBS

P$S STATS	LISTS $PPSE (PAGE PRINTING EXECUTIVE) ACTIVE TASK STATUS.
P$S STOP	STOPS SPOOLING PPS OUTPUT FOR OFFLINE USAGE.
P$S STRT	STARTS $PPSE
P$S TAPE	PRODUCES A PAGE PRINTING SYSTEM (PPS) TAPE FOR OFFLINE USAGE.
P$S TERM	TERMINATE $PPSE WHEN ALL TASKS BECOME IDLE.
P$S TPREQ	LIST ALL OUTSTANDING PPS TASK REQUESTS.
P$S WAIT	REQUESTS THAT $PPSE DISCONTINUE WAITING FOR DPS 6 TO RECONNECT.

FMS VERBS

FMS	ENABLES THE FMS EXECUTIVE ($ FILSYS).
FMS HIST	WHEN CATALOG CACHE IS ENABLED, THIS VERB WILL DISPLAY READS, WRITES, AND CACHE HITS.
FMS HISTRE	WILL OUTPUT HIST STATUS AND RESET COUNTERS.
FMS S(TATS)	REPORT THE STATUS OF FILE CURRENTLY ALLOCATED BY $ FSYS

SECUR VERB

SECUR	MAY BE USED WHEN ANY OF THE SECURITY OPTIONS HAVE BEEN SELECTED. (OPTIONS ARE STATUS, CHANGE, LOCK, UNLOCK, AND USER).

TOPIC V

JOB CONTROL LANGUAGE (JCL) OVERVIEW AND GCOS JOB FLOW

Objectives: Upon completion of this lesson, the student will be able to:

1. List the basic functions of JCL.
2. Determine the required JCL cards for a job.
3. Identify the job/activity relationship.
4. List each phase of job flow and its functions.
5. Describe the interrelation of GCOS software and hardware during job flow.

USAGE

DIRECTIVE TO GCOS

SIMPLE LANGUAGE

JCL CATEGORIES

- JOB DEFINERS
- ACTIVITY DEFINERS
- RESOURCE IDENTIFIERS
- MISCELLANEOUS

BASIC DECK SETUP

JOB DEFINERS

$ SNUMB

$ IDENT

$ USERID

$ SECURITY (for cards only)

$ ENDJOB

To continue a line, put a comma anywhere up to col 72 and use $ and EOL in cols 1&2 of next line

Card Columns →

	cc 73-80
8-14 1672	
SNUMB 12345,25 (URG)	not used
IDENT FP700,PJ31,A-4/ECKER,	
USERID HNYCLASS1$	
DATA	
ENDJOB	
$EOF	

ACTIVITY DEFINERS

$ ADA

$ COBOL

$ CBL74

$ CBL85 (NATIVE mode)

$ GMAP MACRO ASSEMBLER PROGRAM

$ FORTRAN

$ FORT77

$ F77Y (NATIVE MODE)

$ EXECUTE

$ RUN

$ PROGRAM call prgm not Known to System

$ UTILITY

$ UTL2

$ PSM

$ CONVER bulk media conversion

$ FILSYS

$ GENSYS tape mgmt

$ FILEDIT

$ SRCLIB

$ OBJLIB

$ LODLIB

$ LKED linkage editor

~~$ PROGRAM~~

$ SYSEDIT

RESOURCE IDENTIFIERS

$ LIMITS modifies std limits

$ TAPE defines whether 7/9 TRK tape

$ FILE request dkbc file space on disk

$ DATA write files to a temp link file

$ PRMFL access to a permanent data file

$ NTAPE ask for a number of utility tapes

$ PRINT assign h/s print

$ SYSOUT sys output

$ PUNCH assign pch

$ READ assign rdr

$ XXXPK stranger pack from another site/library

MISCELLANEOUS

$ COPY copy old library → new

$ OBJECT beginning of object deck

$ DKEND end " "

$ SET set/re-set pgm switch word

$ MULTI build multi files

$ FUTIL directive used in utility acty

$ FFILE non-std file

$ OPTION altering std gen loader option

$ UPDATE signals a change

$ ALTER makes a chg

***EOF end card

$ MSGn (n = 1, 2, or 3)

$ PRIVITY needs privity (work outside normal environment

MSG1 gives a msg-t job [illegible] for [illegible]

MSG2 [illegible] msg - job continues

MSG3 puts job [illegible] to be run @ later

FORMAT

COMMANDS

DOLLAR SIGN

KEYWORD VS POSITIONAL

FILE CODE defines the logical relationship within an acty

LOGICAL UNIT DESIGNATOR (LUD)

(NAME) CC-14 ↓ LIMITS

(DESCRIPTION) CC-16-72 Memory Priority 6,25

CC-72-80 BLANK

defines relationship of files between acty

logical resource number

FILE CODE & LUD

FILE CODE - DEFINES THE LOGICAL/PHYSICAL RELATIONSHIP WITHIN AN ACTIVITY. TWO ALPHANUMERIC CHARACTERS.

LOGICAL UNIT - DEFINES THE RELATIONSHIP OF FILES BETWEEN ACTIVITIES.

DESIGNATOR - SPECIFIES THE DESIRED UNIT.

AN,ANN,NN,NNN,ANY,UNIT
AAn UNIT NAME
(FOR A NAMED UNIT THE SECOND CHARACTER MUST BE ALPHA.)

FILE CODE & LUD (Cont'd.)

DISPOSITION CODE - DETERMINES THE DISPOSITION OF THE FILE AFTER THE ACTIVITY HAS TERMINATED.

R - RELEASE default code
S - SAVE
C - CONTINUE
D - DISMOUNT
P - PURGE FILE

EG:

```
$     (DEVICE)              FC,A2S
```

FILE CODE

DISPOSITION CODE

LOGICAL UNIT DESIGNATOR

```
$     (DEVICE)              FC,AB1RS
```

ABORT DISP. CODE

NORMAL DISP. CODE

AB1 IS THE NAME OF THIS DEVICE

JOB FLOW

THE SIX PHASES OF JOB FLOW:

ISADTO

1. SYSTEM INPUT VALIDATE JCL
2. SYSTEM SCHEDULER
3. ALLOCATION:
   PERIPHERAL $PALC
   CORE
4. DISPATCHER/EXECUTION
5. TERMINATE NORMAL/ABNORMAL/DISASTER
6. OUTPUT

activity completion:
returns peripherals for
the scheduling algo if
resources are identical

BATCH PROCESSING FLOW

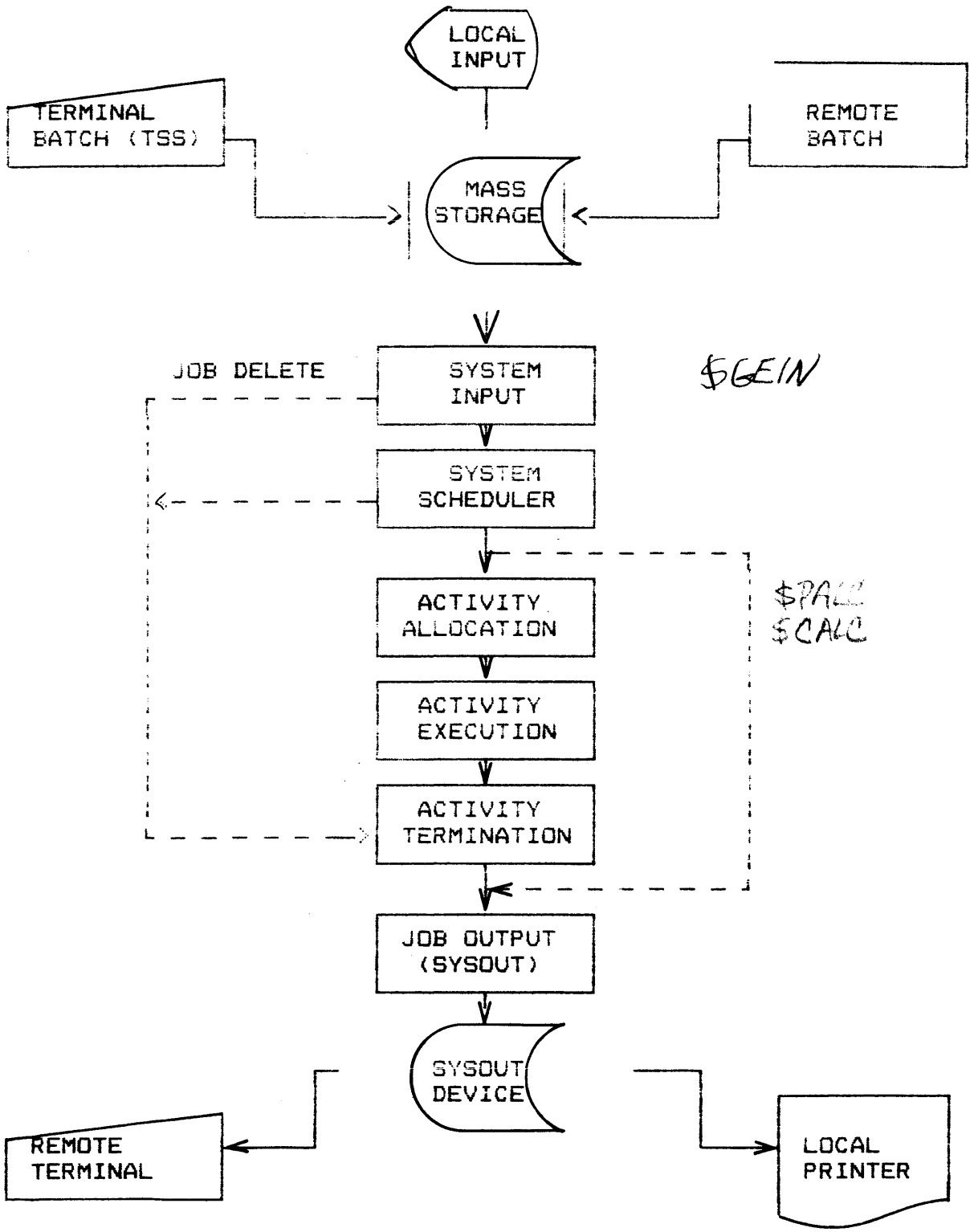

GCOS JOB FLOW
PHASE 1: INPUT

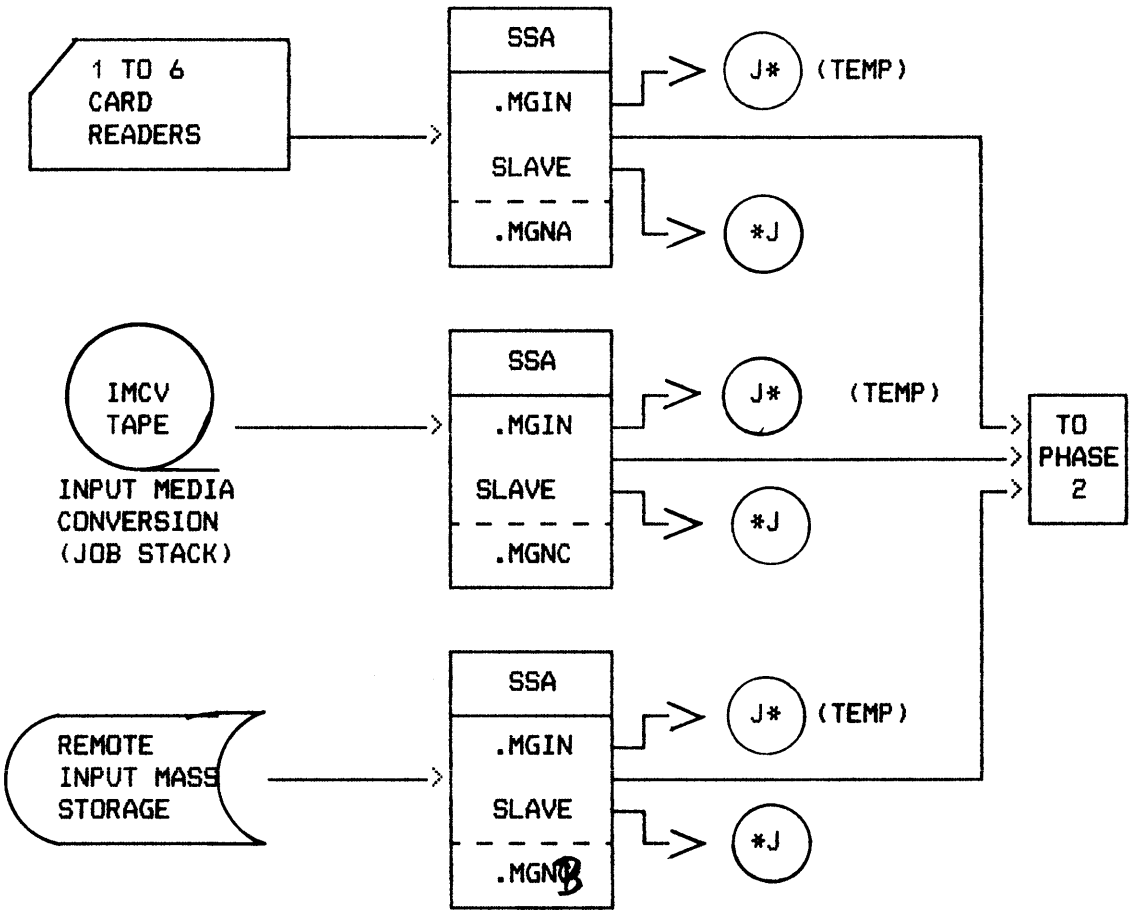

temp files for each job

J* = file holds JCL for the job

*J = file holds allocat. info pertaining to job

GCOS JOB FLOW
PHASE 2: SCHEDULING

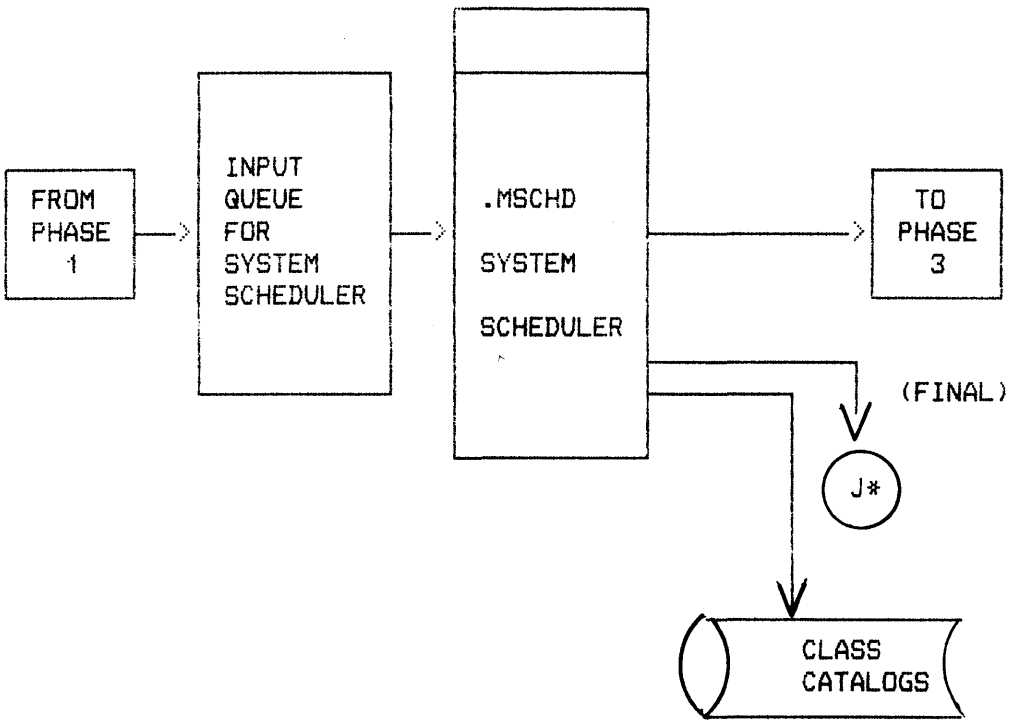

a job qualify @ EXPRS > proc time - 6 min or less
memory - 25K or less
no removable storage

SIEVE LIMITS

LIMIT TIME	TTT (MAX TIME IN .ØØØ HOURS) NONE
LIMIT SIZE	NNN (K) (K IS 1Ø24) NONE
LIMIT SYØT	NNN (K) (L IS 1Ø24) NONE
LIMIT TAPE	NNN NONE
LIMIT LINKS	NNN NONE

$INFO card will set SIEVE parameters

GCOS JOB FLOW
PHASE 3: ALLOCATION

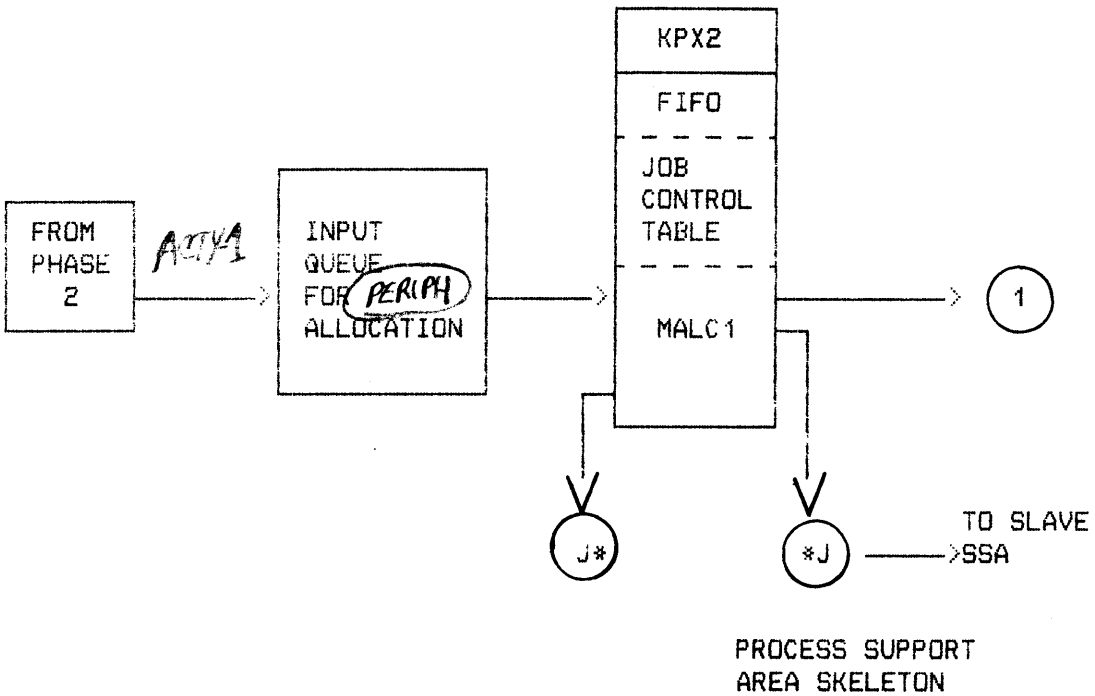

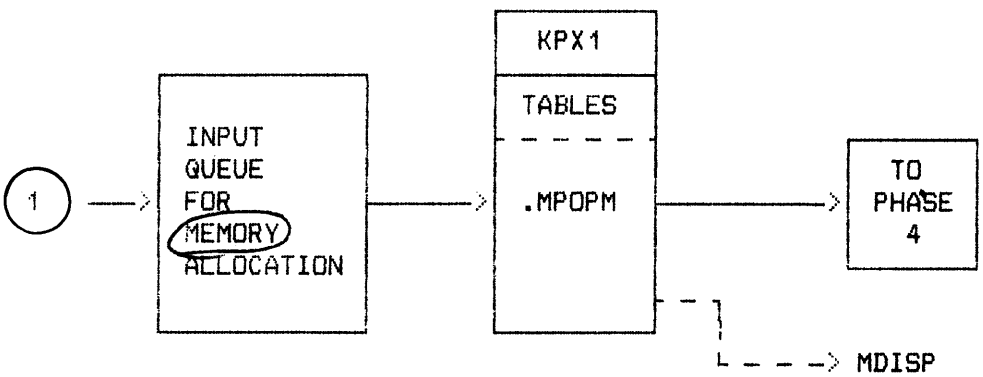

Allocation Priority:
Peripherals
Memory

SOFTWARE OVERVIEW
GCOS 8 SEGMENT DESCRIPTOR CONCEPT

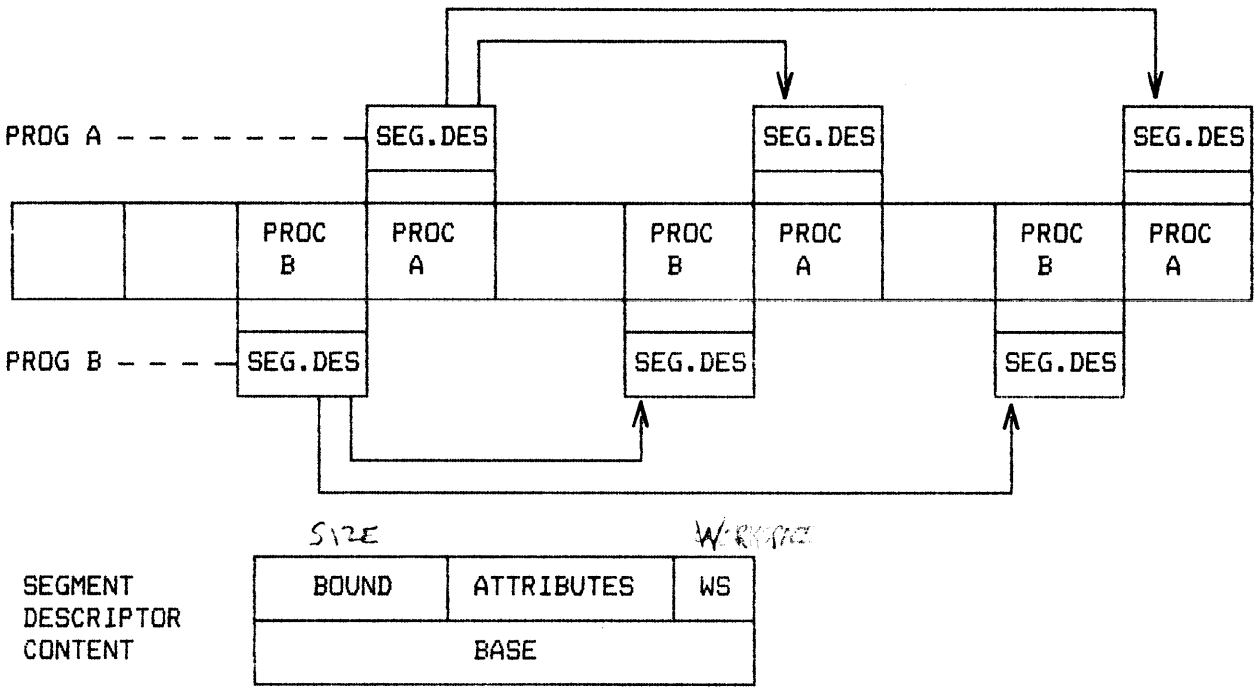

GCOS JOB FLOW
PHASE 4: EXECUTION

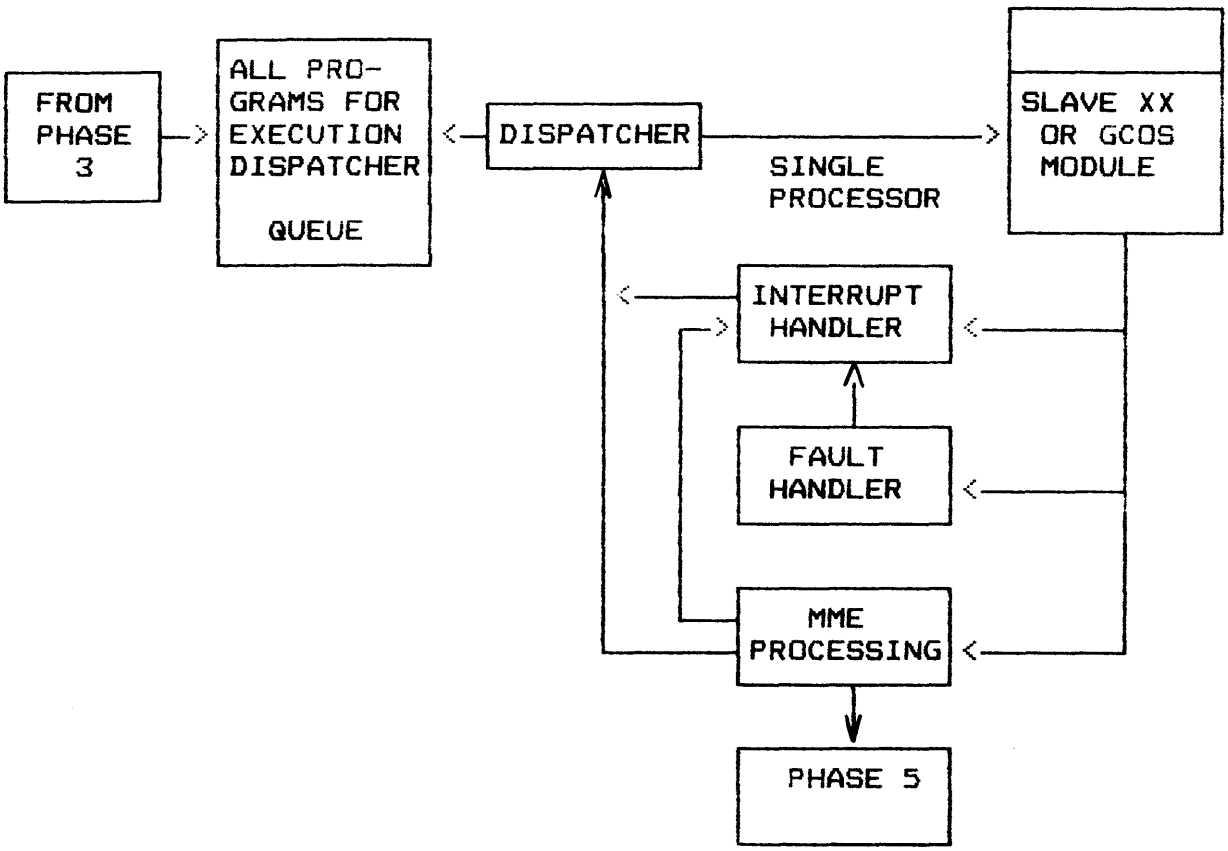

SITE DISPATCHING OPTIONS

- CYCLIC DISPATCHING
- I/O PRIORITY
- URGENCY THROUGHPUT
- PRIORITY B — Time Sharing gets every other time-slice
- PRIORITY A

* = stops all other jobs ! runs until completion then other jobs resume.

GCOS JOB FLOW
PHASE 5: TERMINATION

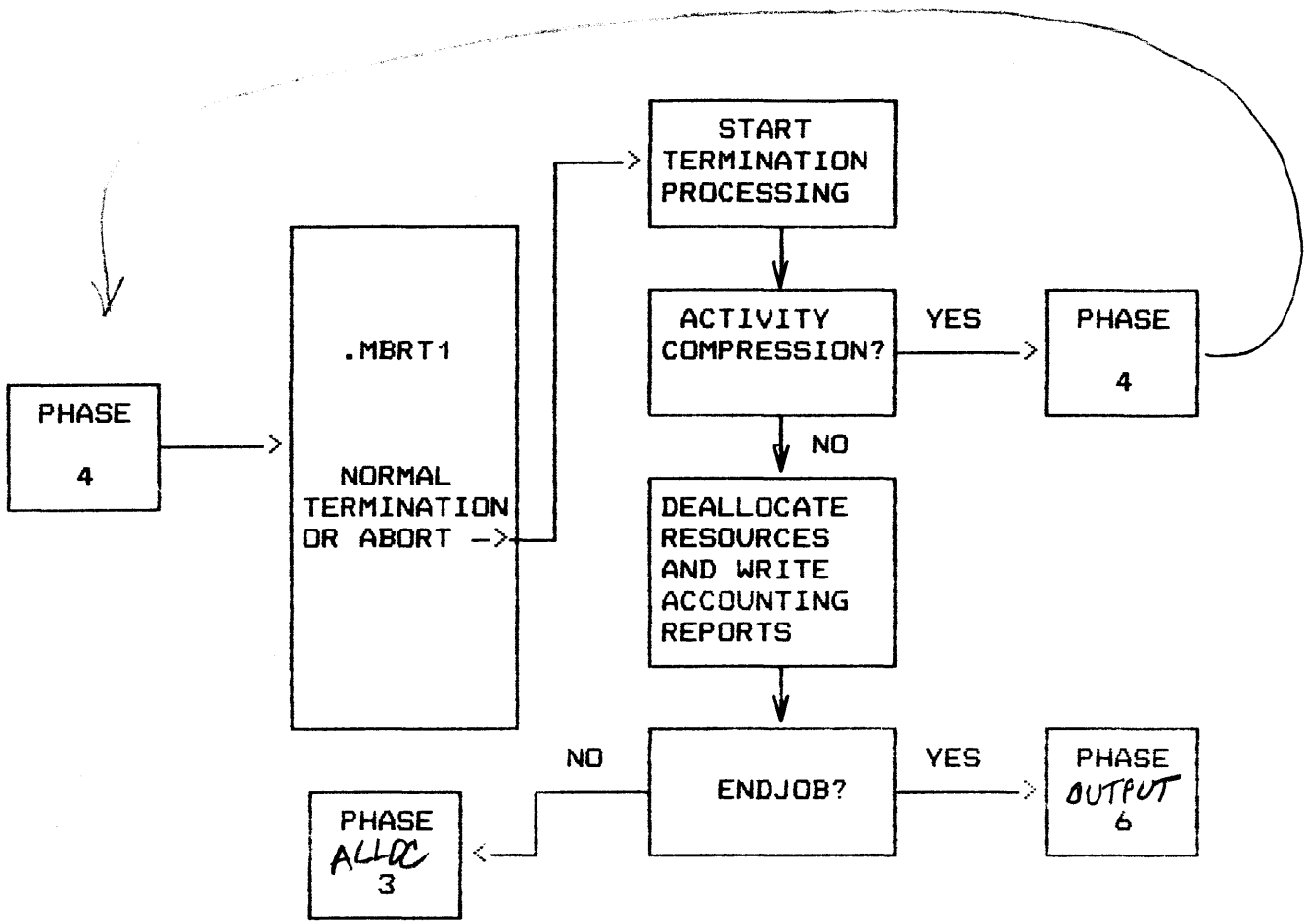

GCOS JOB FLOW
PHASE 6: OUTPUT

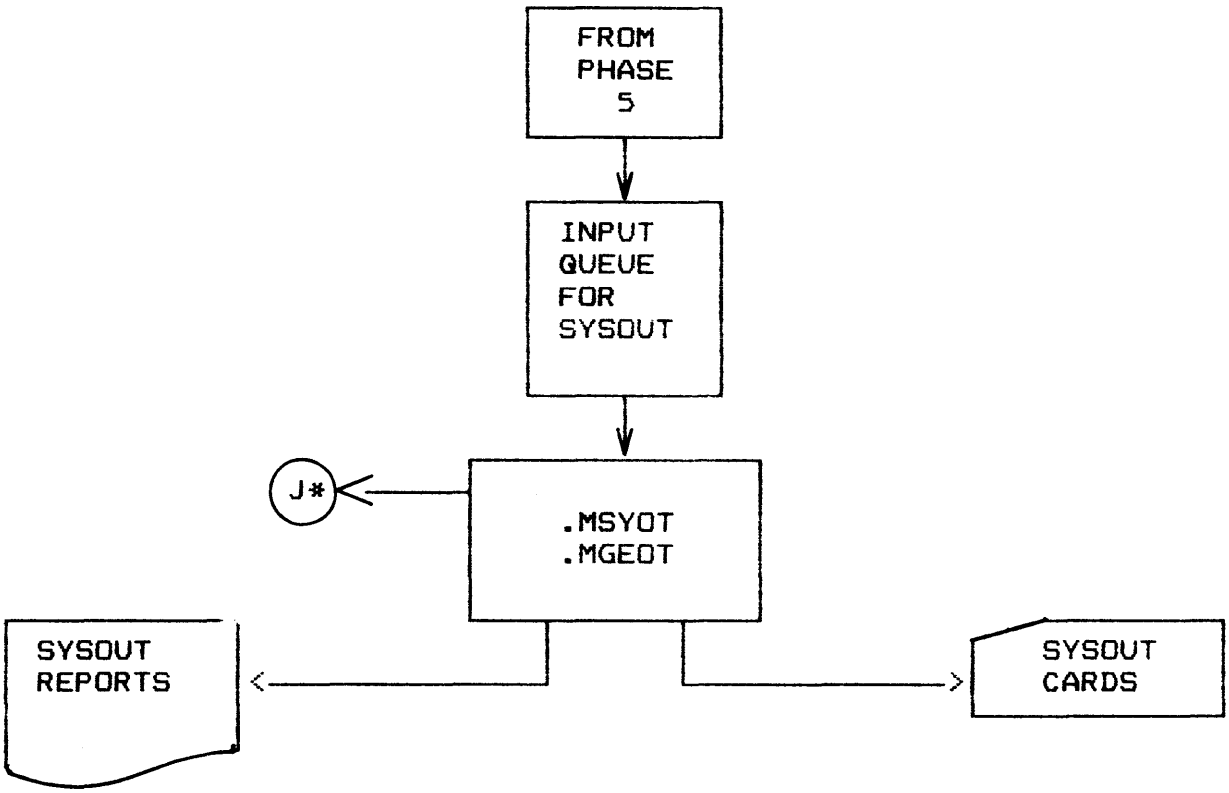

max 64 sysout disp areas

TOPIC VI

BATCH CONSOLE EDITOR

(JCLGEN)

Objectives: Upon completion of this topic, the student will be able to:

1. Establish communication with the Batch Console Editor (JCLGEN).

2. Identify the various types of Batch Console Editor commands.

3. Identify the various Batch Console Editor commands.

see appendix G also

BATCH CONSOLE EDITOR (JCLGEN)

- BCD TEXT PERMANENT FILES
  - CREATED
  - EXAMINED
  - CHANGED

- TYPICAL USE
  - READ FILE INTO BUFFER
  - MODIFY FILE
  - WRITE BUFFER TO A FILE

- AVAILABILITY
  - ANY TIME DURING SYSTEM OPERATION

- INITIATED
  - CONSOLE COMMAND
    JCLGEN
  - PROMPT "-"

CONDITIONS AND RESTRICTIONS

- Commands may be entered by their first letter with the exception of PO, CO, and IB.
- Multiple commands are permitted on one line.
- Commands within one line are delimited by the next command or by one or more spaces, depending on whether the one-character-command-only mode is on or off.
- Leading spaces are tolerated.
- Starting delimiters can be any character that is not part of a full command name for a string searching command; the string is terminated by the next occurrence of this same character (special characters, such as the colon, are the most commonly used delimiters).
- If an error is encountered, the rest of the command line is ignored.
- Commands are prompted by a dash (-).
- Insertions are prompted by an asterisk (*) and terminated by an EOM.
- For line input (insert/replace), the colon (:) is interpreted by default as a tab character, which may be changed with the TAB command (the first tab positions are set to 8, 16, 32, and 73).
- Output from the PRINT command can only be terminated by aborting JCLGEN; enter ABORT JCLGEN at the console.
- The PRINT command prints all specified lines in the buffer including any binary data.
- In conjunction with the PO (Printer Out) command, a print or permanent file may be optionally allocated using a JCL statement with the file code PR as a patch in .MPOPM:

```
$       PRINT     PR ...
$       PRMFL     PR ...
```

BATCH CONSOLE EDITOR COMMANDS

Batch Console Editor commands grouped according to their basic type of action:

- Access file
- Search and print buffer
- Change buffer contents
- Control editor

ACCESS FILE TYPE EDITOR COMMAND

READ

WRITE

SEARCH AND PRINT BUFFER TYPE EDITOR COMMAND

1. =
2. ?
3. BACKUP
4. FIND
5. FORWARD
6. HELP
7. PRINT

CHANGE BUFFER CONTENTS TYPE EDITOR COMMAND

CHANGE

DELETE

INSERT

INSERT_BEFORE

CONTROL EDITOR TYPE EDITOR COMMAND

CONSOLE_OUT

PRINTER_OUT

QUIT

PUT EDITOR TO SLEEP

SET TAB CHARACTER

SET ONE-CHARACTER-COMMAND-ONLY
MODE ON/OFF

ERROR MESSAGES

ILLEGAL COMMAND

SEARCH FAILED

STRING ERROR

INVALID SYNTAX

INVALID CAT/FILE STRING

NO FILE NAME SPECIFIED

PERMISSIONS DENIED

PRINT FILE NOT ALLOCATED

TOPIC VII

CONSOLE MESSAGES (JOB FLOW)

Objectives: Upon completion of this topic, the student will be able to use the system console to monitor and modify a job's progress through the phases of job flow.

CONSOLE MESSAGES (JOB FLOW)

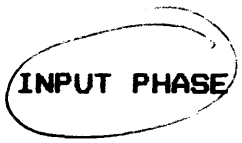

SPAWN	INITIATE A JOB FROM A DISK FILE.
IMCV	INITIATE INPUT FROM AN IMCV TAPE.
STATS/SNUMB	LISTS THE STATUS OF A PARTICULAR JOB.
ABORT	ABORT THE SPECIFIED JOB.
LSTAL	LISTS ALL JOBS KNOWN TO THE SYSTEM.
JCLGEN	BATCH CONSOLE EDITOR FUNCTION.

ALLOCATION PHASE

MEMORY

LSTCR	LIST MAP OF PROGRAMS IN MEMORY.
LSTAL	LIST ALL JOBS KNOWN TO THE SYSTEM.
STATS/SNUMB	LISTS THE STATUS OF A PARTICULAR JOB.
URGC	CHANGE THE URGENCY OF SPECIFIED JOB.
ABORT	ABORT THE SPECIFIED JOB.
SNAP	PREPARE A SNAPSHOT DUMP OF SPECIFIED MEMORY AREAS.
LOOK	DISPLAYS CONTENTS OF A PARTICULAR MEMORY LOCATION.
CHANGE	MODIFIES CONTENTS OF SPECIFIED LOCATION AFTER VALIDITY CHECK.
CHANGF	MODIFIES CONTENTS OF SPECIFIED LOCATION WITHOUT A VALIDITY CHECK.

EXECUTION PHASE

ABORT	ABORT THE SPECIFIED JOB.
APRIOR	REQUEST OR DELETE A-PRIORITY FOR THE SPECIFIED JOB.
BPRIOR	DELETE OR CHANGE B-PRIORITY PARAMETERS FOR THE SPECIFIED JOB.
FMS	IMPLEMENT FMS MONITORING FUNCTIONS.
LSTAL	LISTS ALL JOBS KNOWN TO THE SYSTEM.
STATS/SNUMB	LISTS THE STATUS OF A PARTICULAR JOB.
URGC	CHANGE THE URGENCY OF A SPECIFIED JOB.

SCHEDULER PHASE

JCHGCY	CHANGE CYCLIC PARAMETERS FOR A JOB.
JCLASS	CHANGE MAXIMUM NUMBER OF JOBS FOR A CLASS.
JDELCY	DELETE CYCLIC JOB.
JEND	STOP SCHEDULING FROM A CLASS.
JLIST	LIST JOBS KNOWN TO THE SYSTEM SCHEDULER.
JLSTCY	LIST CYCLIC PARAMETERS FOR A JOB.
JORDER	CHANGE PRIORITY OF A JOB WITHIN ITS CLASS.
JOUST	RELEASE A COMPLETED SAVED JOB.
JPURGE	PREPARE TO PURGE SYSTEM SCHEDULER TO TAPE.
JRERUN	RUN A COMPLETED SAVED JOB.
JRUN	RUN JOBS IN HOLD OR RESTART STATUS.
JSCHED	PLACE JOB IN EXPRESS CLASS.
JSTRT	START SCHEDULING FROM A CLASS.
LIST SCHED	LIST JOBS IN SYSTEM SCHEDULER.
ABORT	RELEASE SPECIFIED JOB FROM SCHEDULER.

ALLOCATION PHASE

PERIPHERAL

HOLD	PUT JOB IN HOLD STATUS.
LIMIT	CHANGE SIEVE LIMITS.
LSTPR	LIST OF ALL JOBS KNOWN TO PERIPHERAL ALLOCATOR.
LSTQ	STATUS OF JOBS IN PALC FIFO LIST.
LSTAL	LIST ALL JOBS KNOWN TO SYSTEM.
RUN	RUN A JOB IN HOLD, LIMBO, OR SIEVE STATUS.
STATS/SNUMB	LISTS THE STATUS OF A PARTICULAR JOB.
URGC	CHANGE THE URGENCY OF SPECIFIED JOB.
ABORT	ABORT THE SPECIFIED JOB.
REEL	REPLY TO PALC REQUEST FOR A TAPE NUMBER.

TERMINATION PHASE

ABORT	ABORT THE SPECIFIED JOB.
URGC	CHANGE THE URGENCY OF A SPECIFIED JOB.
STATS/SNUMB	LISTS THE STATUS OF A PARTICULAR JOB.

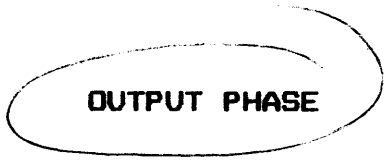

ABORT	ABORT THE SPECIFIED JOB'S OUTPUT.
COPY	COPY SPECIFIED SYSOUT TO MAGNETIC TAPE AS WELL AS NORMAL HARD COPY.
PURGE	SPECIFIED SYSOUT TO BE WRITTEN TO TAPE AND NO HARD COPY PRODUCED.
REDRC	REDIRECT DESIGNATED SYSOUT TO SPECIFIED STATION.
CANCL	COPY, PURGE, REDRC.
REPRO	REPUNCH/REPRINT SPECIFIED OUTPUT.
NOPRO	PREVENT DELIVERY OF OUTPUT FOR COMPLETED JOBS ALREADY IN SYSOUT.
UNJOUT	RELEASE JOB IN SYSOUT THAT IS BEING HELD FOR JOUT. → user inspection of JOB
SYSOUT (BLANK)	PROVIDES ONLINE HELP.
SYSOUT BLINKS	REPORTS SYSOUT BLINK SPACE.
SYSOUT CNT	DISPLAYS JOBS FOR SPECIFIED SET.
SYSOUT FORMS	LISTS JOBS WHICH REQUIRE FORMS.
SYSOUT JOUT	DISPLAYS JOBS WAITING FOR JOUT.
SYSOUT PPS	LISTS JOBS DESTINED FOR PPS.
SYSOUT RSVID	LISTS JOBS ON RESERVED IDS.
SYSOUT SPEC	DISPLAYS JOB OUTPUT SPECIALS IN EFFECT.
SYSOUT TOTAL	DISPLAYS BLINKS, SPEC, JOUT, AND A CONTROL FIELD SPECIFYING ALL.

OUTPUT PHASE (Cont'd.)

MVALL	REQUEST THAT THE OUTPUT INDICATED BE HANDLED BY SPECIFIED SYSTEM.
VOID	REQUEST THAT VERB XXXXX BE VOIDED ON ANOTHER SYSTEM.

TOPIC VIII

STARTUP AND BOOTLOADS

Objectives: Upon completion of this topic, the student will be able to:

1. Perform system boot using a startup deck the student created.

2. Respond correctly to output messages generated during system boots.

OVERVIEW

BOOT LOADER PROGRAM
loads in startup program

(.MINIT) STARTUP PROGRAM - size memory
verify mem size
process startup deck
set up pointers

(C) $CONFIGURATION SECTION
describes hardware setup
sets up operating parameters

(I) $INITIALIZE SECTION
write firmware to a file called DEVICE
construct & re-establish pointers on disk

(E) $EDIT SECTION
identify all RSX system files & locations

(F) $FILES SECTION
process files identified in edit section

(P) $PATCH SECTION
incorporate optional corrections

(L) $LOAD SECTION
loads modules into memory
for site unique modules

*** EOF card @ end of each section
and two (2) @ end of last section to
indicate end of startup

CONFIGURATION SECTION

in config deck:
1(\M

MCT describes everything about SCU

IOM describe IOM

XBAR

M[illegible] descr firmware

MCT-0 4096, [illegible] 0, TAM-0
PORT 1, [illegible] 1,
PORT 6 [illegible]

COMMENTS

ETC

CARD SEQUENCE REQUIREMENTS

MCT-1 4096 (not same as above)

CARD FORMAT

CARDS INCLUDED IN CONFIGURATION SECTION

- $ SYID
- $ TRACE
- $ ANSWER
- $ INFO
- $ BASE
- $ MCT
- $ IOM - see p. 3-1

see [illegible] Startup Manual sections

$ IOM-0 [illegible] 8 [illegible], UNIT 6
UNIT-1, ST2, AU-2
UNIT 2, ST2, AU-2
ETC

JCL FORMAT

CC

1	8-14	16-72	72-80
$	SNOMC	Description (OP) optional [illegible]	optional [illegible]

end line with comma (16-72)
next line begins with $ [illegible] E[illegible])

CONFIGURATION SECTION (Cont'd.)

```
$ XBAR
$ URP
$ MPC
$ MPCFIG identifying firmware on MPC
$ GCOSFIL
$ AUTOLD
$ DECKFIL
$ LOADFIL
$ IMAGE
$ TRAINS
$ FILCREA
$ UNIT
$ SECURE
```

INITIALIZE SECTION

CARD SEQUENCE

CARDS INCLUDED IN THIS SECTION

- $ INIT
- $ OBJECT

MPCB BINARY DECK INSERTED HERE

- $ DKEND
- $ DIRECT
- $ OBJECT

FIRMWARE DECKS FOR MSP, MTP, AND URP

- $ DKEND
- $ READIN
- $ DEKSAV
- $ VOPT
- $ VSET

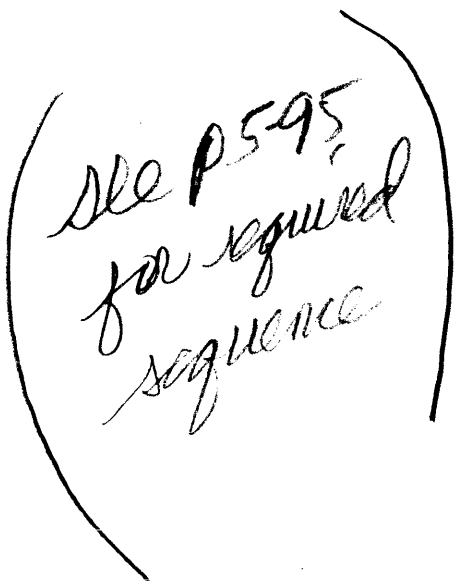

EDIT SECTION

CARDS INCLUDED (ANY SEQUENCE)

$ FILDEF

$ SSFILE

$ DTFILE

$ ENDTF

FILES SECTION

CARDS INCLUDED IN THIS SECTION (ANY SEQUENCE)

$ ACCBUF

$ SCFBUF

$ ACCOUNT

$ LIBRARY — L* sys subroutine libra
*L user " "

$ PFILES

$ SAVE

$ SSLOAD

$ SYSOUT

$ SYSTEM

$ DEFILES

$ SCFDSP

PATCH SECTION

OCTAL PATCHES

MASK CARDS

APPLICATIONS OF PATCHES

ADVANTAGES

DISADVANTAGES

LOAD SECTION

FUNCTIONS

ADVANTAGES

COMMENTS PERMITTED

OPTIONAL SECTION

$ READIN

$ GHCM

$ SHCM

IOM CHANNEL CONFIGURATION

SINGLE CHANNEL

DUAL CHANNEL

DUAL CHANNEL CROSSBARRED

DOUBLE DUAL CHANNEL CROSSBARRED (FULL REDUNDANT SUB-SYSTEM)

IOM CHANNEL CONFIGURATION

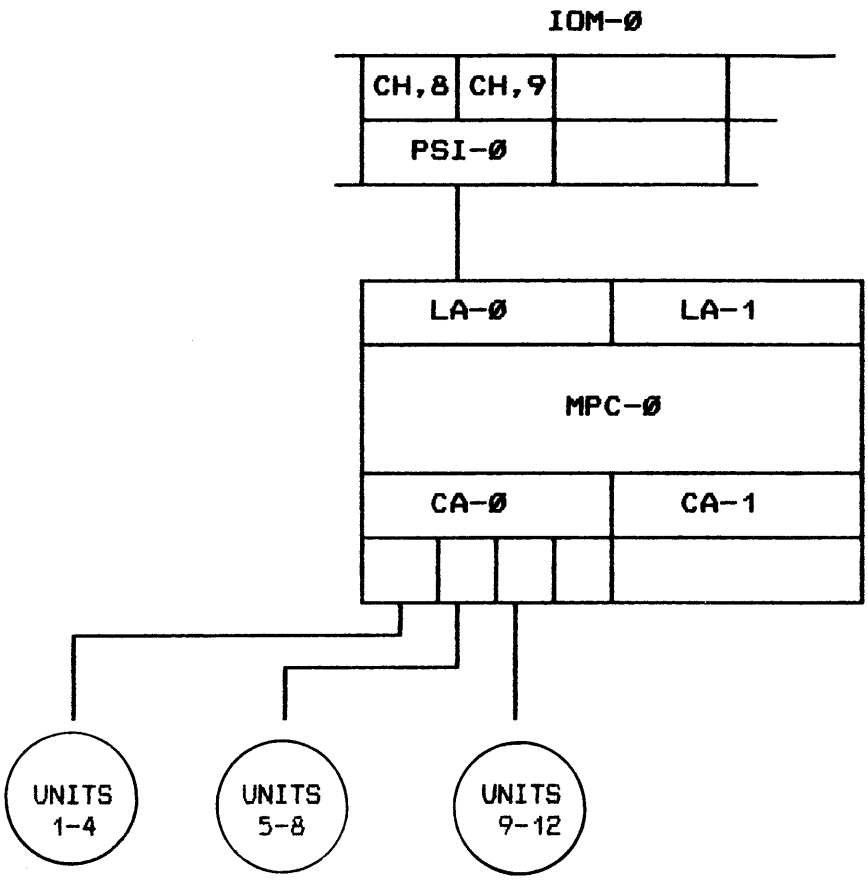

single
IOM CHANNEL CONFIGURATION

```
1         8         16
$         IOM-Ø     PUB-8,DISC*MSØ4ØØ,UNITS-12,NONSEQ,
$         ETC       UNIT-1,NAME,UNIT-2,NAME,
            .
            .
            .
$         ETC       UNIT-11,NAME,UNIT-12,NAME
                          (PRIMARY PUB)
$         XBAR      IOM-Ø,PUB-8,PUB-9
$         MPC-Ø     SIZE-4,PSI-Ø,IOM-Ø,PUB-8,PUB-9
```

IOM CHANNEL CONFIGURATION

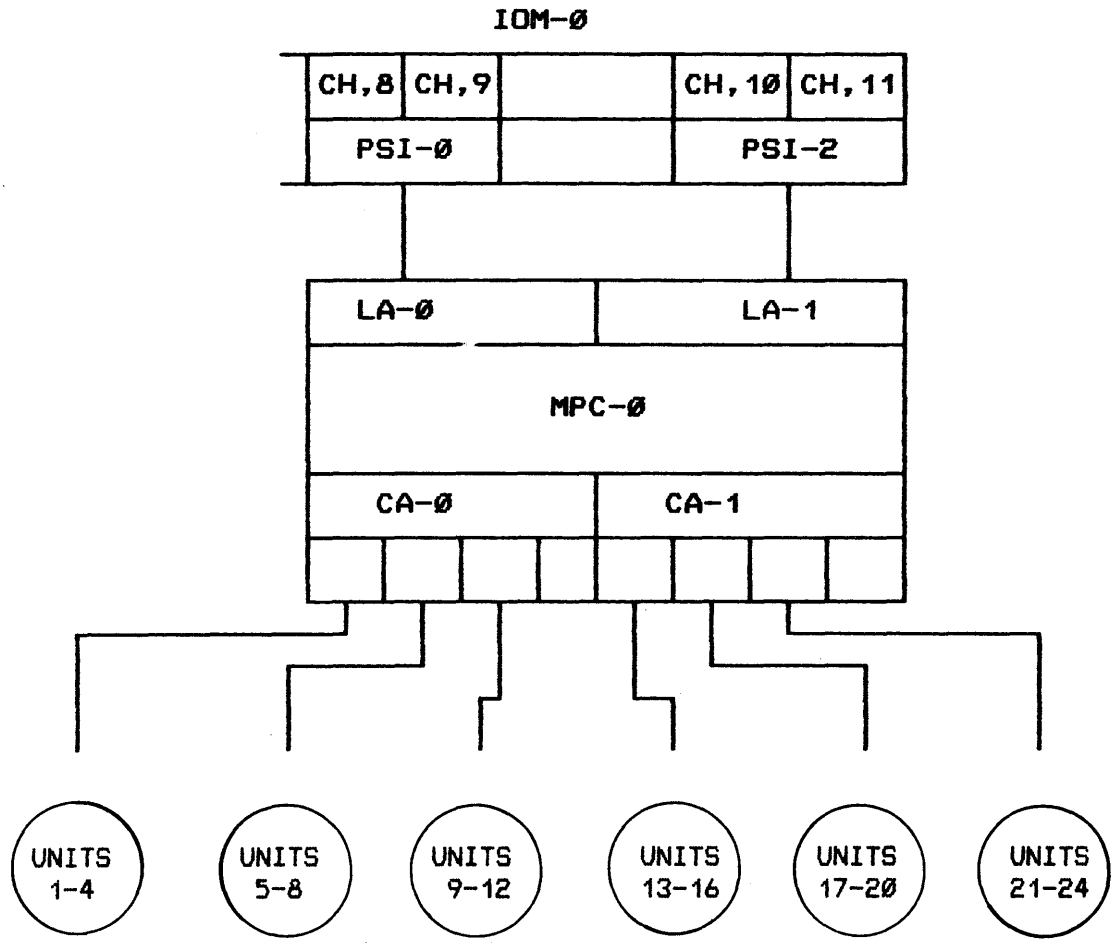

IOM CHANNEL CONFIGURATION

```
1       8       16
$       IOM-Ø   PUB-8,DISC*191,UNITS-12,NONSEQ
$       ETC     UNIT-1,NAME,UNIT-2,NAME,
          .
          .
          .
$       ETC     UNIT-11,NAME,UNIT-12,NAME
$       IOM-Ø   PUB-1Ø,DISC*191,UNIT-12,NONSEQ,
$       ETC     UNIT-13,NAME,UNIT-14,NAME,
          .
          .
          .
$       ETC     UNIT-23,NAME,UNIT-24,NAME
$       XBAR    IOM-Ø,PUB-8,PUB-9
$       XBAR    IOM-Ø,PUB-1Ø,PUB-11
$       MPC-Ø   SIZE-4,PSI-Ø,IOM-Ø,PUB-8,PUB-9,
$       ETC     PSI-2,IOM-Ø,PUB-1Ø,PUB-11
```

IOM CHANNEL CONFIGURATION

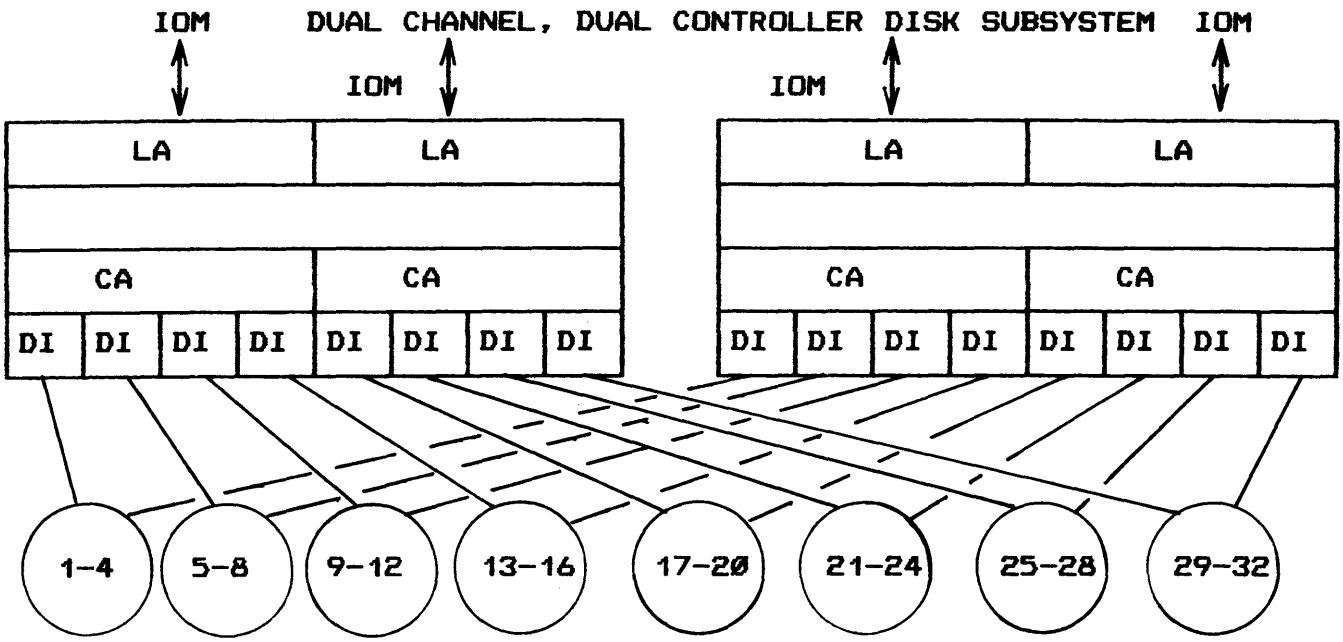

FIRMWARE

FUNCTION OF FIRMWARE

CONTAINED ON TAPE/CARDS

SPECIFIED IN $CONFIG SECTION

ISSUED BY:

- MASS STORAGE PROCESSOR (MSP)
- MAGNETIC TAPE PROCESSOR (MTP)
- UNIT RECORD PROCESSOR (URP)

SYSTEM BOOTLOAD

PURPOSE

MAIN FUNCTIONS

OPERATOR CONTROLS

SYSTEM CONTROLS

STARTUP PROGRAM

ESTABLISH SYSTEM ENVIRONMENT

TYPES OF BOOTLOAD

SYSTEM BOOTLOAD

SYSTEM STARTUP ELEMENTS

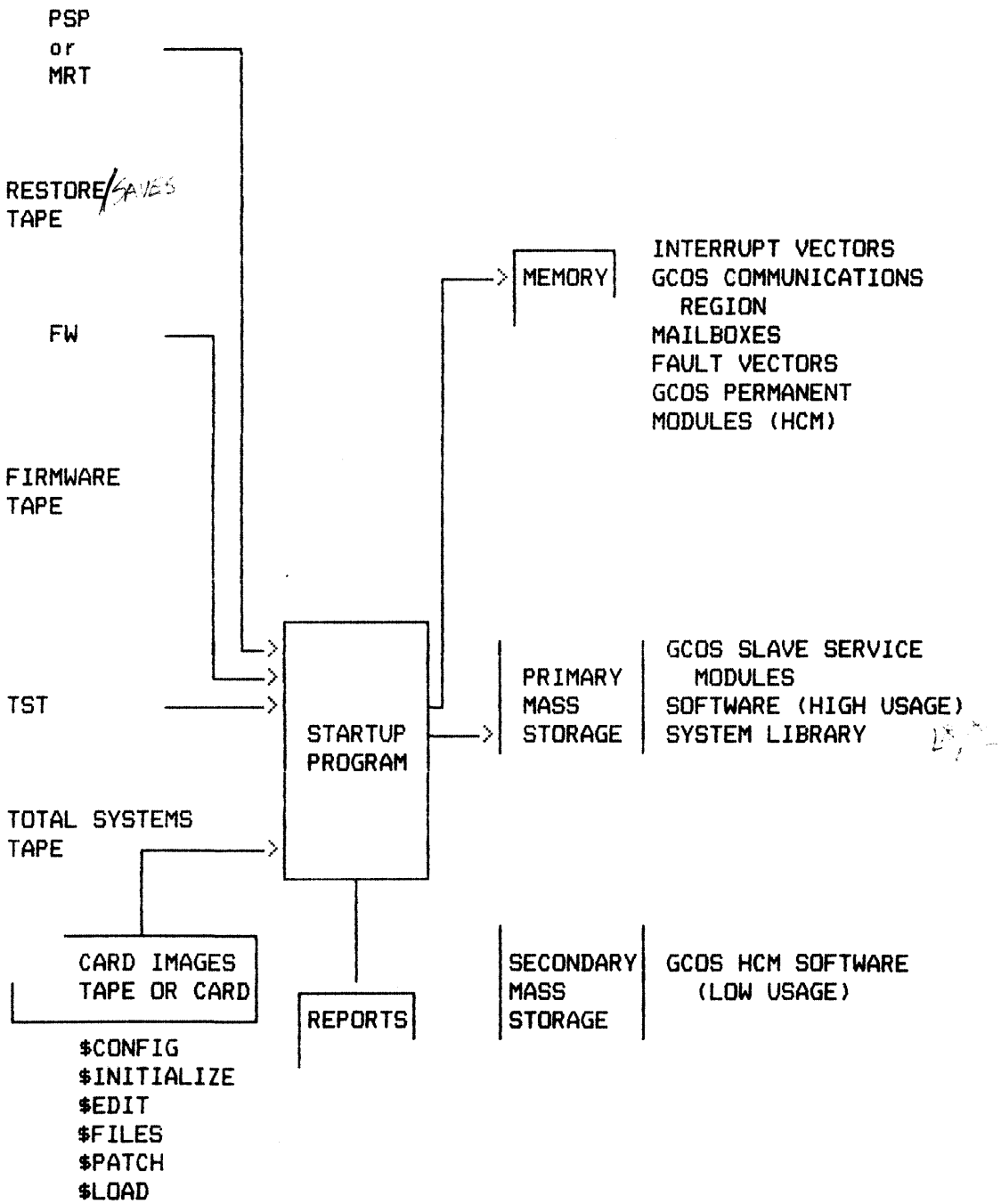

SYSTEM BOOTLOAD

WHEN?

WITH WHAT?

HOW?

SYSTEM BOOTLOAD

WHEN

AFTER BLOCK TIME
MAINTENANCE

SYSTEM FAILURE

LOST FIRMWARE

SITE STANDARDS

SYSTEM BOOTLOAD

WITH WHAT

BOOT DECK

- CARDS
- TAPE
- DISK (AUTOLOAD)

TOTAL SYSTEMS TAPE

FIRMWARE TAPE

SAVE TAPES

SYSTEM BOOTLOAD

WITH WHAT

BOOT SOURCE

CARDS OR TAPE

AND

IOM SWITCHES

+

MPC SWITCHES

5, 6, & 7

4 2 1

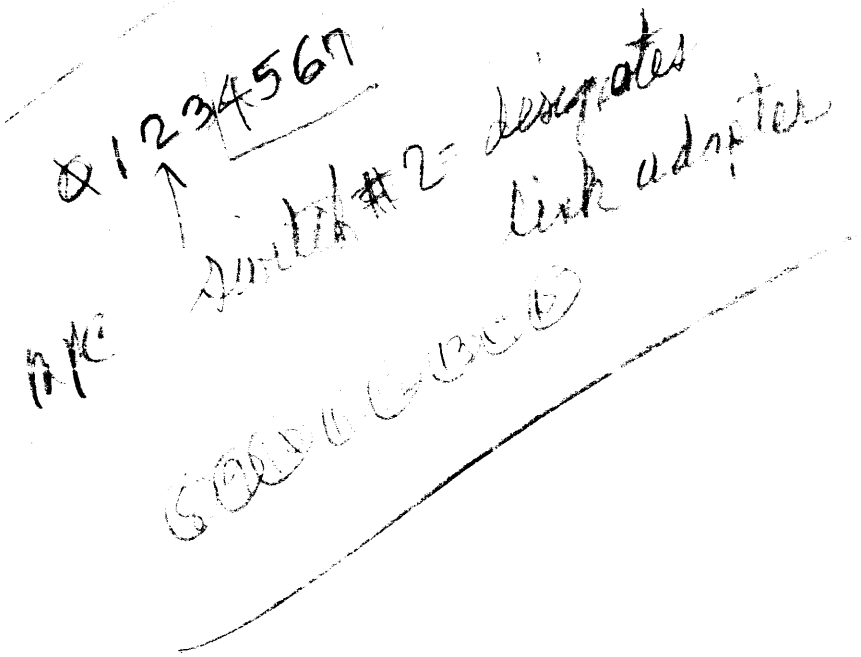

SYSTEM BOOTLOAD

WITH WHAT

BOOT SOURCE

DISK (AUTOLOAD)

$ AUTOLD ST1,200Ø

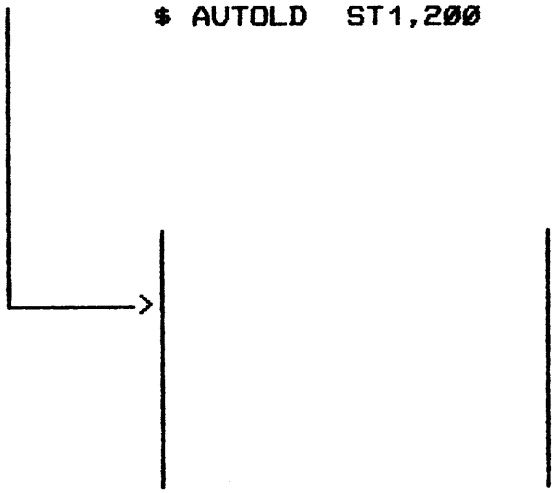

??? BOOT Note down sys in study manual

??? DUMP

**** DUMP (O)PTION/(D)EFAULT/(N)ONE?

SYSTEM BOOTLOAD

HOW

COLD BOOT

LOADS GCOS FILES

LOADS FIRMWARE TAPE

NO JOB RESTART

FULL RESTORE OF ALL USER FILES

NORMALLY START UP BOOTING

BOOT SOURCES

CARDS

OR

TAPE

SYSTEM BOOTLOAD

HOW

WARM BOOTS A & B

OPTIONAL
- LOADS FIRMWARE TAPE
- JOB RESTART

FASTBT ON/OFF

NORMALLY RESTART BOOTING

BOOT SOURCES

WARM BOOT A -

CARDS OR TAPE

WARM BOOT B -

DISK

SYSTEM BOOTLOAD

HOW BOOT QUESTIONS

*REPLACE? Is insert changes to get more sections

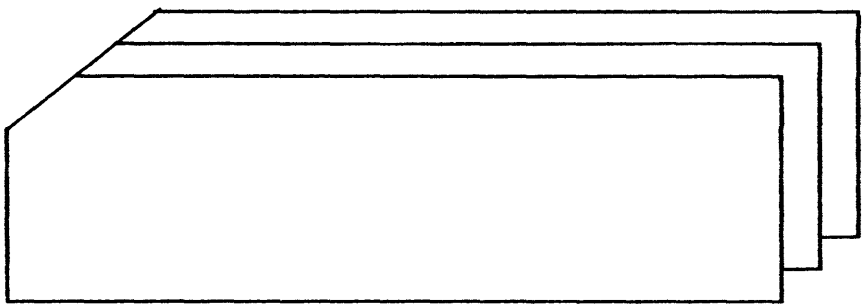

$CONFIG SECTION

$INITIALIZE SECTION

$EDIT SECTION

$FILES SECTION

$PATCH SECTION

$LOAD SECTION

SYSTEM BOOTLOAD

HOW BOOT QUESTIONS

*CHANGE? NO

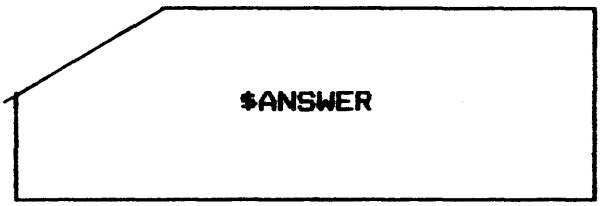

*CHANGE? YES

alter $ANSWER cards override

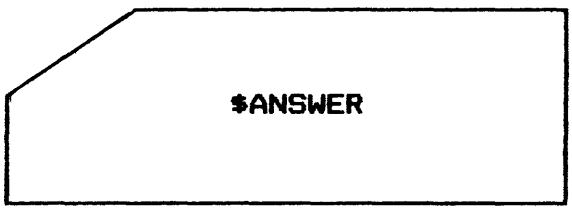

SYSTEM BOOTLOAD

HOW BOOT QUESTIONS

JOB RESTART

* RESTART?
* SYSTEM SCHEDULER

  CLEAR?

* SYSOUT RECOVERY?

* END RECOVERY

  DATA SAVED OK

ACCOUNTING FILE

* SCF CONTINUATION?
* DATE?
* TIME?

* SCF FILE CLOSED OK

  CHANGE OR ACCEPT

  EOM OR CHANGE

SYSTEM BOOTLOAD

HOW BOOT QUESTIONS

```
*INITIALIZE? YES
$  INIT   ST1,DP2?  (YES, NO or EOM)
*FORMAT/LABEL QUESTIONS:  (YES, NO or EOM)
* i cc dd CHG PACK ST1?  (nnn,EOM)
* i cc dd FMT PACK ST1?  (YES, NO or EOM)
```

SYSTEM BOOTLOAD

HOW BOOT QUESTIONS

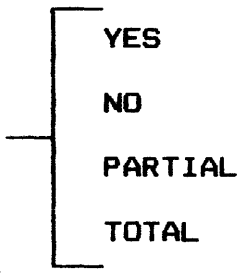

*INITIALIZE? PARTIAL

*INIT DEVICE ddd?
$ READIN ST1, 800
IIII

* xxxMPC ON icc BOOTLOAD?

SYS ID NAME "XXXXXX"

* xxxMPC ON icc NOT RESPONDING PROPERLY

TYPE (B)OOT, (S)KIP, OR (R)ETRY

* CLEAR AND OVERWRITE EXISTING DECKFILE?

* PROCESS DIRECTORY CARD FOR DEVICE ST1?

SYSTEM BOOTLOAD

HOW BOOT QUESTIONS

EDIT? — YES
NO
PARTIAL

GCOS PERMANENT FILES

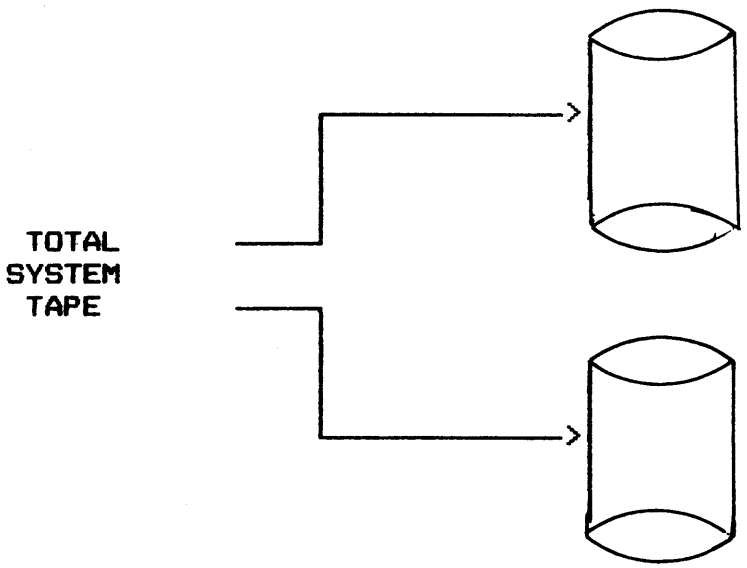

IFAD INSTALLATION PORTION

```
???test ifad (THIS INVOKES IFAD)
***IFAD EXECUTIVE SYSTEM VERSION 810211 on 022481 at 13.97
$IFAD DECKFILE CLEARED
*IFAD DECKFILE CLEARED, EXTENSION FILE MUST BE REBUILT,
*ENTER TRACK/DEN, SERIAL ((7/9)/(8/16/62), SERIAL)? 9/16,IFAD
    *MNT TAPE S#SIFAD0 0-16002 REEL#IFAD
***IFAD EXECUTIVE IFAD VERSION 810211 ON 022481 at 14.03
***IFAD EXECUTIVE VERSION 810211 OFF 022481 at 14.34 P.T. 456836
```

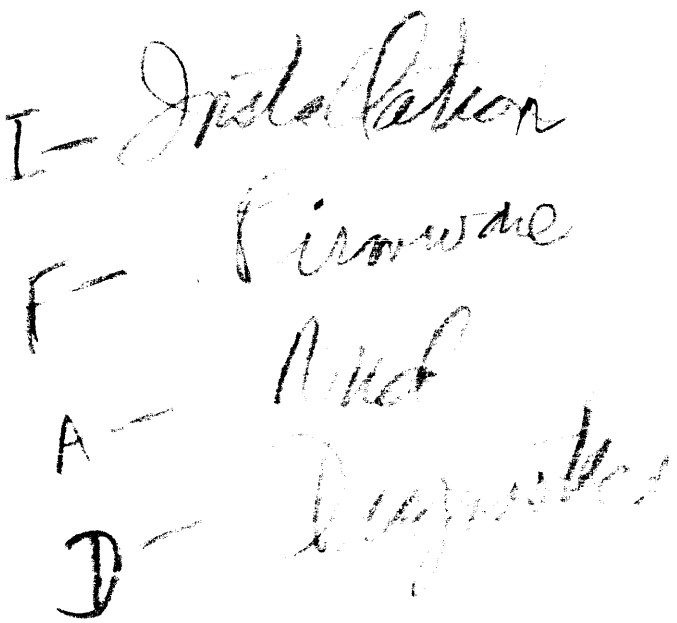

TOPIC IX

SWITCH SETTINGS AND RECONFIGURATION

Objectives: Upon completion of this topic, the student will be able to:

1. Correctly set the switches on the Processor, IOM, System Controller and Front-End Network Processor.

2. Perform dynamic release and assignment of system modules.

3. Split and merge systems through switch settings and bootloading.

4. Perform system recovery procedures.

MAINFRAME DOOR PANEL

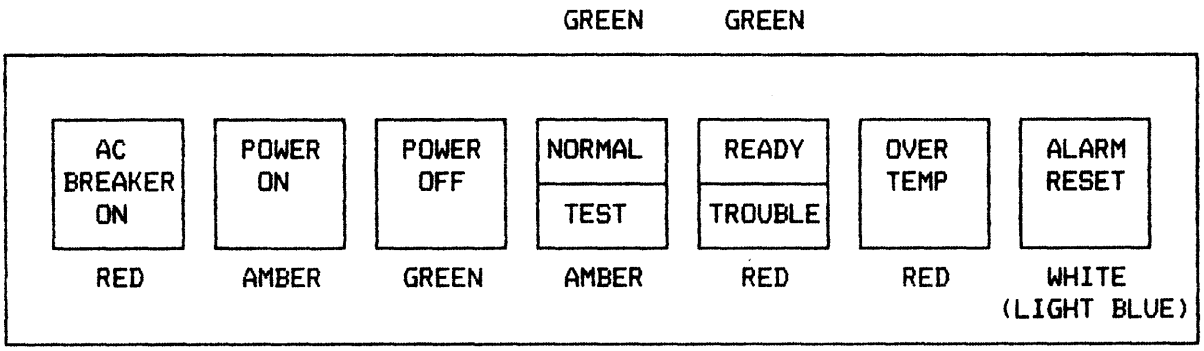

FOR STARTING AND STOPPING THE:

PROCESSOR

SYSTEM CONTROLLER

MEMORY

IOM

FNP

SYSTEM CONTROLLER

PORT ENABLE

CYCLIC PRIORITY

NON-EXISTENT ADDRESS

ALARM

PANEL

LWR STORE SIZE

MODE

STORE

INTERLACE

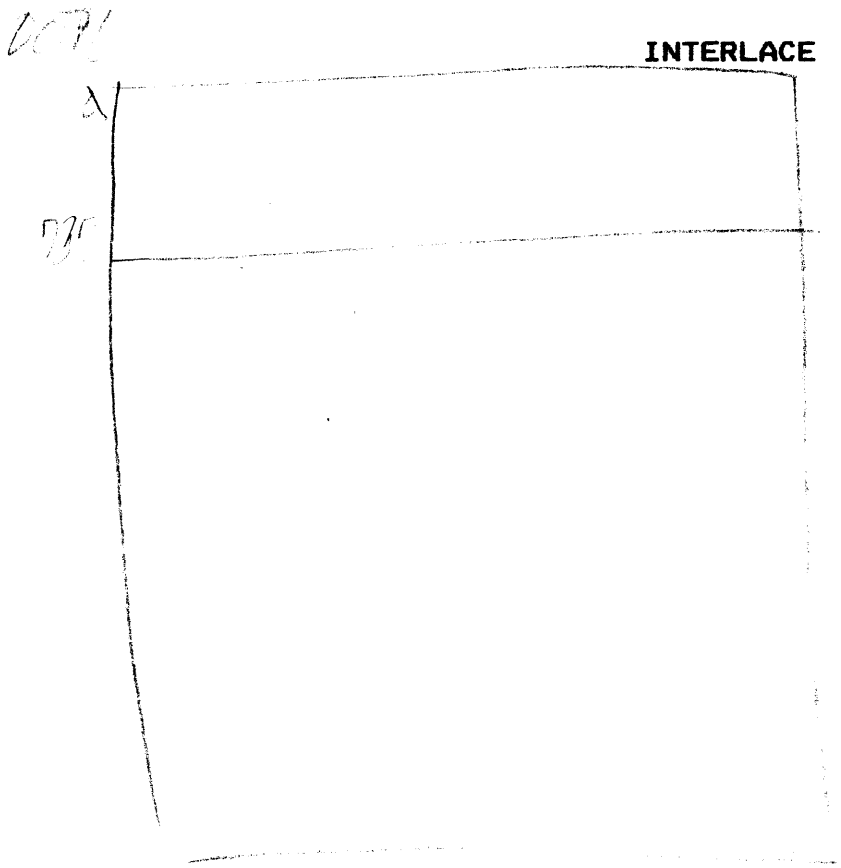

INPUT OUTPUT MULTIPLEXER

PORT ASSIGNMENTS

PORT ENABLE

INTERLACE

SYSTEM INITIALIZE ENABLE

IOM BASE ADDRESS

PROGRAM INTERRUPT BASE

STORE SIZE

BOOTLOAD SOURCE

BOOTLOAD PORT

INITIALIZE/BOOTLOAD

ZERO-BASE S.C. PORT NO.

OPERATING MODE

PROCESSOR

PORT ASSIGNMENT

INTERLACE

PORT ENABLE

SYSTEM INITIALIZE ENABLE

STORE SIZE

INITIALIZE & CLEAR

PROCESSOR NUMBER

ALARM SWITCH

TEST/NORMAL SWITCH

MODE

****
*LEAVE THIS PAGE BLANK UNTIL JERRY AND/OR BUD HAVE TIME TO *
*RESEARCH THE MATERIAL AND GIVE AN ANSWER ON A QUESTION ABOUT *
*THE TEXT CONTENT (OLD PAGE NUMBER 8-6) *
****

DYNAMIC RECONFIGURATION

WHEN TO RECONFIGURE

- SCHEDULED MAINTENANCE
- DEVICE/CHANNEL FAILURE
- OFF-LINE TESTING
- SYSTEM SPLIT/MERGE
- POWER FAILURE

DYNAMIC CONFIGURATION

- RELEASING COMPONENTS
  - PERIPHERAL DEVICES
  - I/O CHANNELS
  - MEMORY
  - PROCESSOR
  - IOM

- ASSIGNING COMPONENTS
  - MEMORY
  - PROCESSOR
  - IOM
  - I/O CHANNELS
  - PERIPHERAL DEVICES

RELEASING/ASSIGNING MEMORY

RLSEC xxxxx yyyyy

ASGNC xxxxx yyyyy

xxxxx - BEGINNING ADDRESS OF THE SCU BEING RELEASED

yyyyy - THE AMOUNT OF MEMORY CONTAINED IN THAT SCU

IOM RELEASE/ASSIGNMENT

RLSEI m

- MOVE CONSOLE NAMES
- RLSE OR EXCHG UNIT RECORD EQUIPMENT ASSIGNED TO EXECUTING PROGRAM
- MOVE PR1
- TCALL FNP'S

ASGNI m

SPLITTING SYSTEM

- RLSEC
- RLSEP
- RELEASE APPROPRIATE PERIPHERALS
- RLSEI
- SET SWITCHES FOR NEW SYSTEM
- BUILD STARTUP DECK FOR NEW SYSTEM
- BOOT NEW SYSTEM

MERGING SYSTEMS

- SET PORT ENABLE SWITCHES ON ALL SCU'S

- RESET MEMORY ADDRESSING SWITCHES TO ORIGINAL SETTINGS

- ASGNC

- ASGNI

- ASGNP

- MOVE AND ASGN PERIPHERALS

RESTART CAPABILITIES

- GCOS PROVIDES SYSTEM RECOVERY
  - BASED ON SYSTEM DATA SAVED BY .MDUMP
  - USER PROGRAM CHECKPOINTS TAKEN
  - CLEANPOINTS TAKEN BY GCOS

- USER SITE INTERFACE
  - $ INFO CLENPT
  - $ INFO FASTBT
  - $ INFO ACALL/ { n | TSS | TPE }
  - $ ANSWER

RESTART CAPABILITIES

- ???BOOT
  - .MDUMP WRITES 64 WORD TABLE TO "SAVE" FILE
  - IF OK, STARTUP LOGS "RECOVERY DATA SAVED OK"

- STARTUP PROGRAM IN CONTROL

  *BOOT SOURCE: CARDS,AUTO,REPL?

  *RESTART?

  *SCHEDULER CLEAR?

RESTART CAPABILITIES

DUMP PROCEDURES

- DUMP OF MAIN MEMORY
  - "DUMP" CONSOLE VERB
  - SYSTEM FAULT
  - EXECUTE FAULT

RESTART CAPABILITIES

DUMP PROCEDURES

```
*RECOVERY DATA SAVED OK

FLT EXECUTE PGM # Ø1 $CALC    TIME  HH.TTT

DISC SCF CLOSED OK

*** DUMP (O)PTION/(D)EFAULT/(N)ONE?

PRINT TAPE 1#,DENSITY DISK OR NONE?

-IF RESPONSE IS "PRINT"

***DUMP: ALL, HCM,SOFT,SLV,WXXX-YYY,PPP,REAL,NPURE,NON,OPTS
      (-)SD.XXX,.MXXXX,PH.XXX,PSH,SSF,HIS,TRC,COM,PTW,ONLY
```

TOPIC X

STARTUP CONSOLE EDITOR

Objectives: Upon completion of this topic, the student will be able to:

1. Establish communication with the Startup Console Editor.

2. Identify the various Startup Console Editor commands.

STARTUP CONSOLE EDITOR

- FUNCTION

  EDITING OF AUTOLD FILE

- CONDITION

  AUTOLD FILE MUST EXIST

- USED

  DURING STARTUP

INITIATION OF STARTUP CONSOLE EDITOR

- Enter the word TEXT in response to any question asked by Startup, or

- Enter the word TEXT in response to the ??? prompt after pressing the REQUEST push button.

STARTUP CONSOLE EDITOR COMMANDS

FIND

FORWARD

PRINT

INSERT

INSERT_BEFORE

DELETE

CHANGE

BACKUP

QUIT

SWITCH OUTPUT STREAM TO PRINTER

SWITCH OUTPUT STREAM TO CONSOLE

READ

VERIFY

REPEAT LAST COMMAND

PRINT CURRENT STATEMENT NUMBER

SET TAB CHARACTER

HELP

CONDITIONS AND RESTRICTIONS

Commands are denoted by their first letter with the exeption of PO, CO, and IB. Multiple commands are permitted on a line and are delimited by the next command or a space. Leading spaces are tolerated. Any character is accepted as a string delimiter.

If an error is encountered, the rest of the command line is igonred.

On card input (insert/replace), colon is interpreted as a tab character. Tabs are set to: 8, 16, 32, 73.

Upon exiting the editor, the AUTO boot is automatically performed.

If the output stream is a printer, the print command prefixes statements with their relative statement number.

Binary statements (firmware) are treated in a totally transparent manner.

Output from the print command may be terminated by hitting the request key.

The autoload file is automatically updated when quitting the console editor.

TOPIC XI

HARDWARE RELIABILITY AIDS

Objectives: Upon completion of this topic, the student will be able to:

1. Test online equipment through the use of the Total Online Testing System (TOLTS).

2. Interpret TOLTS output reports for decision making.

3. Understand the function and operation of the Error Logging and Analysis report program (ELAN).

4. Perform ELAN initialization and recovery.

TOLTS

TOLTS PROGRAMS ARE AN INTEGRAL PART OF GCOS AND RESIDE ON THE TEST AND DIAGNOSTICS GCOS LIBRARY FILE ON MASS STORAGE.

TOLTS EXECUTIVE

PRIVILEGED SLAVE

INTERFACE WITH GCOS

CONCURRENT PROCESSING

COMMANDS

TOLTS INITIATION

AUTOMATIC

GENERAL EXCEPTION PROCESSING ROUTINES

ONLINE OPERATOR CONSOLE

REMOTE TERMINAL

AUXILIARY CONSOLE

TOLTS SUBSYSTEMS

THE TOTAL ONLINE TEST SYSTEM IS COMPOSED OF FOUR MAJOR TEST SUBSYSTEMS:

C- comm
M- maintenance/memory
P- peripheral
S- system processor

COLTS

MOLTS

POLTS

SOLTS

HARDWARE RELIABILITY AIDS

TOLTS

SUBSYSTEM OVERVIEW

COLTS

SOLTS

MOLTS

POLTS

TERMINATION

OPTIONS

ELAN

HARDWARE RELIABILITY AIDS

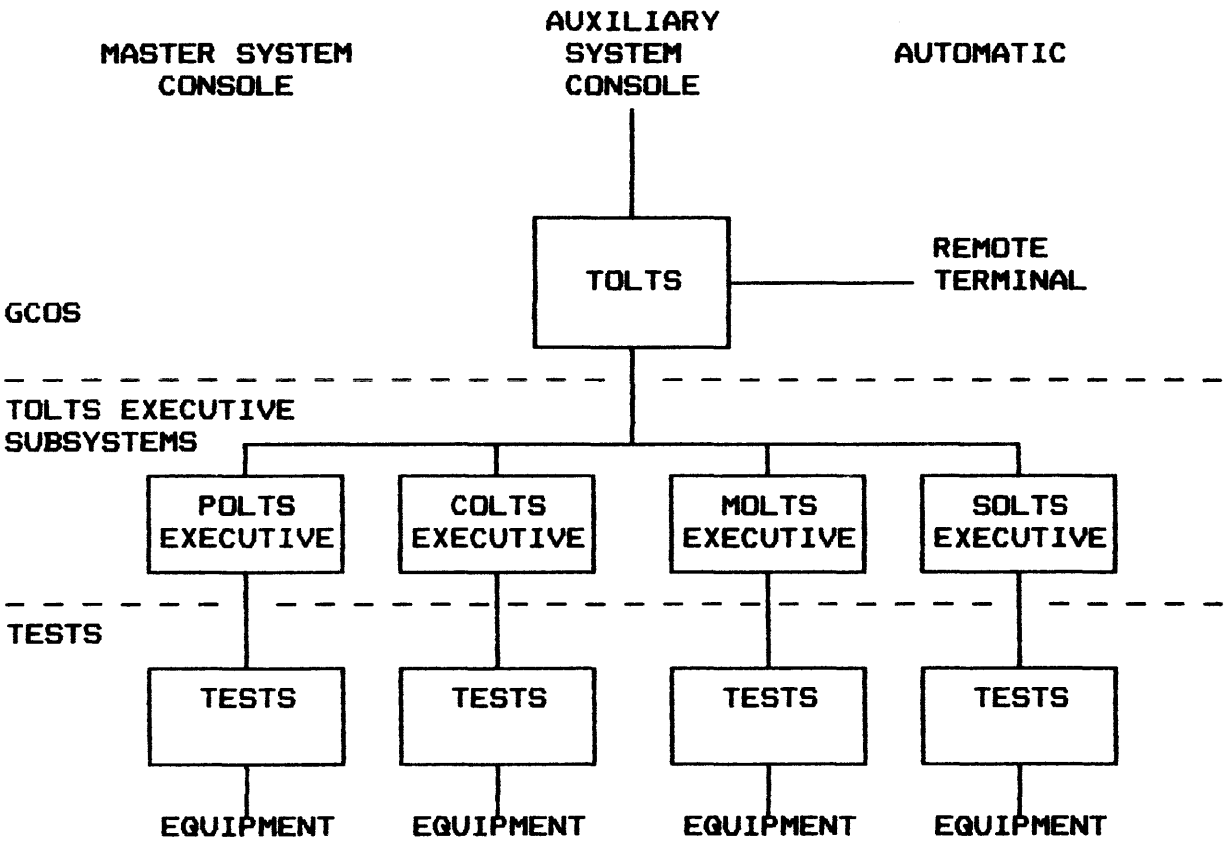

Max eight tests in one category

24 total

TOLTS SUBSYSTEMS

COLTS

PROVIDES CAPABILITY OF FUNCTIONAL TESTING OF THE DATANET 355/6678 FRONT-END NETWORK PROCESSOR (FNP) ADAPTERS AND REMOTE DEVICES.

FUNCTIONAL CAPABILITIES

HARDWARE TESTED BY COLTS FNPs, HSCA, LSLA

OPERATOR COMMAND STRUCTURE

COLTS COMMANDS

TEST PAGE OPTIONS

INPUT MESSAGES

OUTPUT ERROR MESSAGES

TOLTS SUBSYSTEMS

PROVIDES THE ONLINE CAPABILITY FOR TESTING MALFUNCTIONING SYSTEM PROCESSORS.

THREE MAIN MODULES

- CONTROLLER/FAULT PROCESSOR
- EXECUTIVE
- TEST PAGE

HARDWARE TESTED

COMMAND STRUCTURE

EXECUTIVE COMMANDS

TWO TYPES OF OPTIONS

- CONTROL
- EXECUTIVE

INFORMATIVE MESSAGES

ERROR MESSAGES

ABORT CODES

TOLTS SUBSYSTEMS

MOLTS

MAINFRAME ONLINE TEST SYSTEM USED TO TEST CENTRAL SYSTEM MODULES

- HARDWARE TESTED
- OPERATING RESTRICTIONS
- OPERATOR COMMAND STRUCTURE
- EXECUTIVE COMMANDS
- MEMORY TEST COMMANDS
- HISTORY REGISTER COMMANDS
- TEST PAGE OPTIONS
- INFORMATIVE MESSAGES
- INPUT OPERATOR MESSAGES
- OUTPUT MESSAGES
- SPECIAL CONTROL OPTIONS

TOLTS SUBSYSTEMS

POLTS

THE PERIPHERAL ONLINE TEST SYSTEM PROVIDES FUNCTIONAL TESTING AND ONLINE TROUBLE SHOOTING OF MALFUNCTIONING PERIPHERAL DEVICES.

HARDWARE TESTED

OPERATING RESTRICTIONS

OPERATOR COMMAND STRUCTURE

OPERATOR COMMANDS

STANDARD OPTIONS

SPECIAL OPTIONS

INFORMATIVE MESSAGES

INPUT MESSAGES

OUTPUT ERROR MESSAGES

Can't do MOLTS

[illegible] @ the same time

RLSE periph first

TEST iccdd

[illegible] PE I[illegible] / TEST PW

single test / all tests

The Error Logging and Analysis report program (ELAN) is a TAC-accessible program in the site's system that helps to obtain a wide range of reports on system hardware operation. These reports help to evaluate system hardware performance and to identify hardware components that require maintenance. The reports are available to a Customer Service Representative or customer personnel via batch mode interfaces at the site.

Using data collected and stored by the ELAN error collector (ECOL), ELAN can provide reports on the following types of system hardware operating functions:

- System configuration
- System aborts
- Cache memory parity errors
- System (processor, system controller, and memory) statistics
- MOS EDAC errors
- Peripheral device (I/O errors)
- Magnetic tape and disk controller statistics
- Tape media report
- Disk media report

ELAN

FILES

ERROR COLLECTION FILE (ECF)

ABORT SUMMARY FILE (ASF)

ERROR SUMMARY FILE (ESF)

PROGRAM USAGE

MPP STATISTICS REPORTER PROGRAM (MPCD)

-MPP STATISTICS READ FROM ESF

RELIABILITY AIDS

DATA COLLECTION

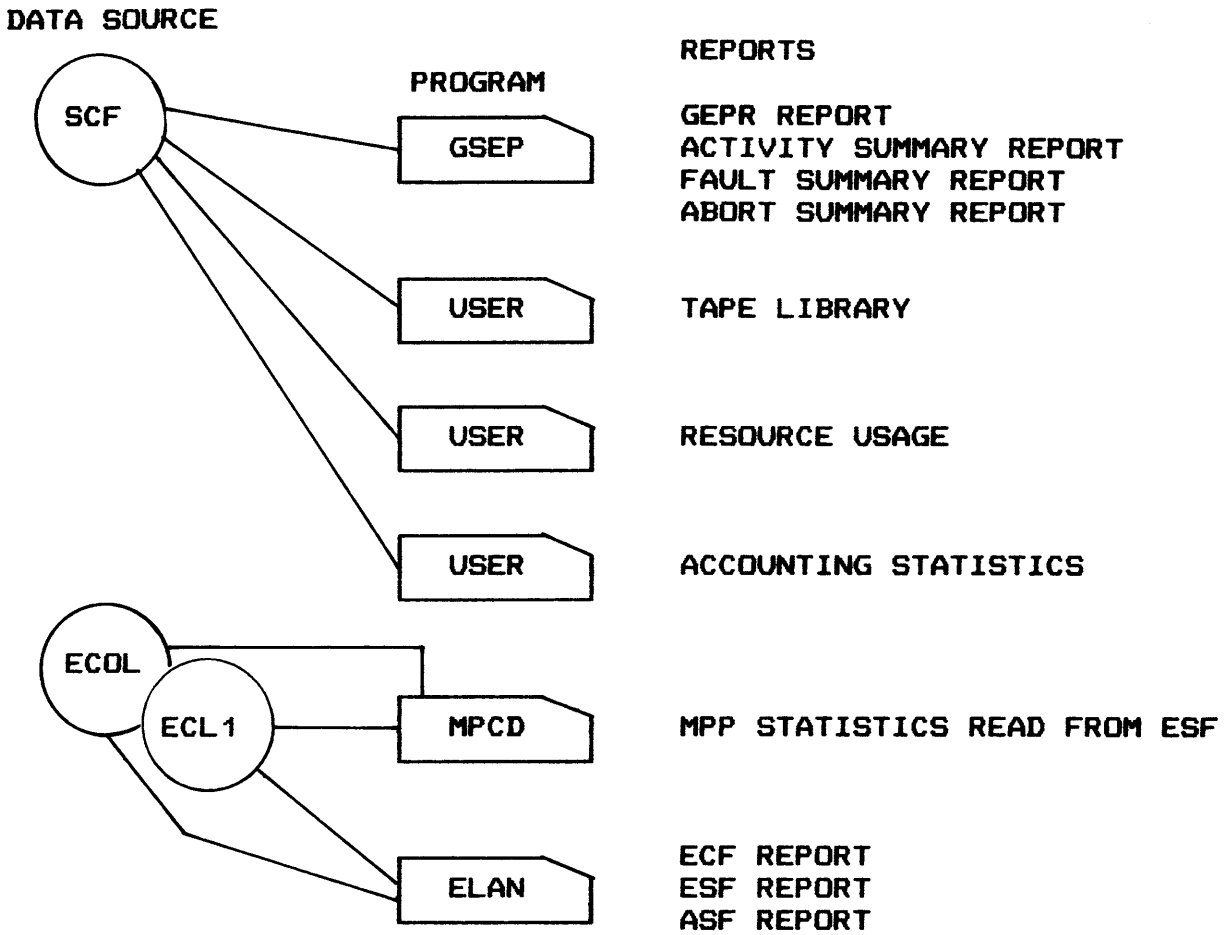

RELIABILITY AIDS

GCOS FLOW OF ERROR ANALYSIS

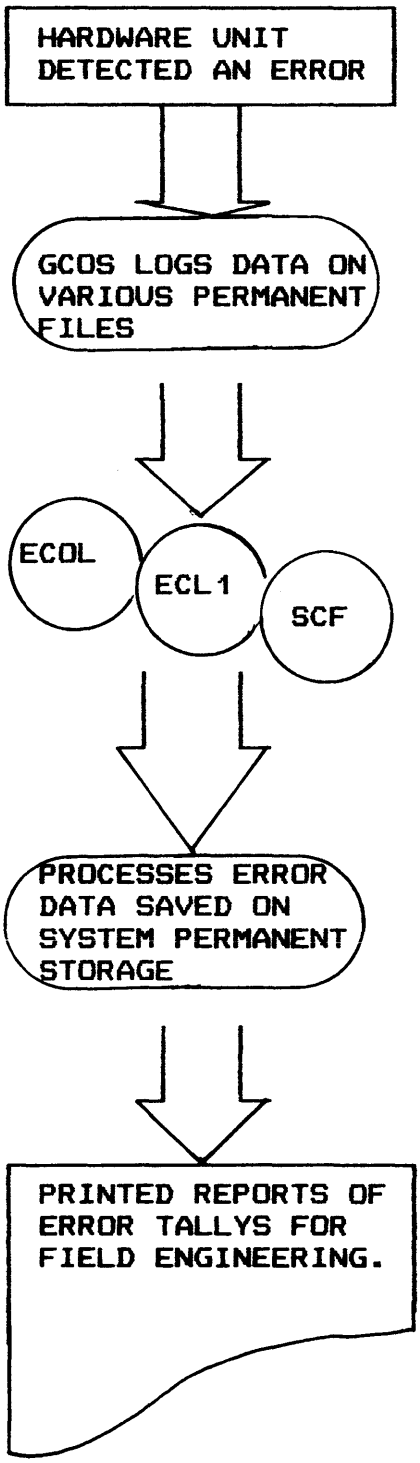

RELIABILITY AIDS

ELAN CONSOLE VERBS

ECOL CACHE STATUS

ECOL CSHMOF

ECOL CSHMON

ECOL CSHOFn

ECOL CSHONn

ECOL ~~CHSTS~~ CSHSTS

ECOL DLYxx

ECOL GPR (option)

ECOL MPC ETxxxx

ECOL MPC SPxxxx

ECOL START

ECOL STOP

ECOL ~~RCOMM~~ n

RCOMM

TOPIC 12

WWMCCS INTERCOMPUTER NETWORK (WIN)

Objectives: Upon completion of this topic, the student will be able to:

1. Describe the function and operation of WIN.
2. Describe the function and relationship of WIN software to the H6000/DPS GCOS software.
3. Identify hardware configuration within the WIN network.
4. Describe the function of network security.
5. Utilize console messages to initiate and control the WIN.

WWMCCS INTERCOMPUTER NETWORK BACKGROUND

- WWMCCS COMPUTER INTERNETTING PRESCRIBED IN 1971.
- PWIN DEVELOPED BY CCTC AS RDT&E EFFORT.
- MODELED AFTER ARPA USING PACKET SWITCHING.
- INITIAL NETWORK CONSIST OF THREE SITES BY DECEMBER 1974.
- PWIN EXPANSION APPROVED IN JANUARY 1975 TO INCLUDE REDCOM, MAC, ANMCC.
- NETWORK SECURITY CLASSIFICATION - SEPTEMBER 1975.
- POENG ESTABLISHED IN NOVEMBER 1975.
- OE 1 IN OCTOVER 1976 USING POINT BLANK 74 SCENARIO.
- OE 2 IN OCTOBER 76 USING ELEGANT EAGLE 76 SCENARIO.
- OPERATIONAL REQUIREMENT DEVELOPED AND VALIDATED BY JCS JULY 1977.
- NETWORK IMPLEMENTATION PLAN APPROVED BY JCS ON 16 JANUARY 1978.

DEFINITION OF TERMS

- HOST - DATANET AND H6000 DPS
- IMP - INTERFACE MESSAGE PROCESSOR
- NMC - NETWORK MONITOR CENTER
- COMMUNICATIONS SUBNET - 50 KBPS LINES WITH ENCRYPTION, IMPS AND MODEMS.
- LOCAL HOST - H6000 DPS
- DISTANT/REMOTE/FOREIGN HOST - H6000 DPS
- CONNECTION - LOGICAL LINK BETWEEN USER PROGRAMS IN DISTANT COMPUTER AND LOCAL PROGRAM
- JOPS - JOINT OPERATION PLANNING SYSTEM
- UNITREP - UNIT REPORTING SYSTEM
- NOC - NETWORK OPERATIONS CENTER

CONCEPTS

- 50K BPS LINES
- SECURE LINES
- PACKET SWITCHING
- IMP
- TERMINAL USER ACCESS
- MORE DATA AVAILABLE
- FILE TRANSFER CAPABILITY
- CONFERENCING
- NETWORK MONITOR CENTER
- SYSTEM SECURITY

SAMPLE SYSTEM CONFIGURATION

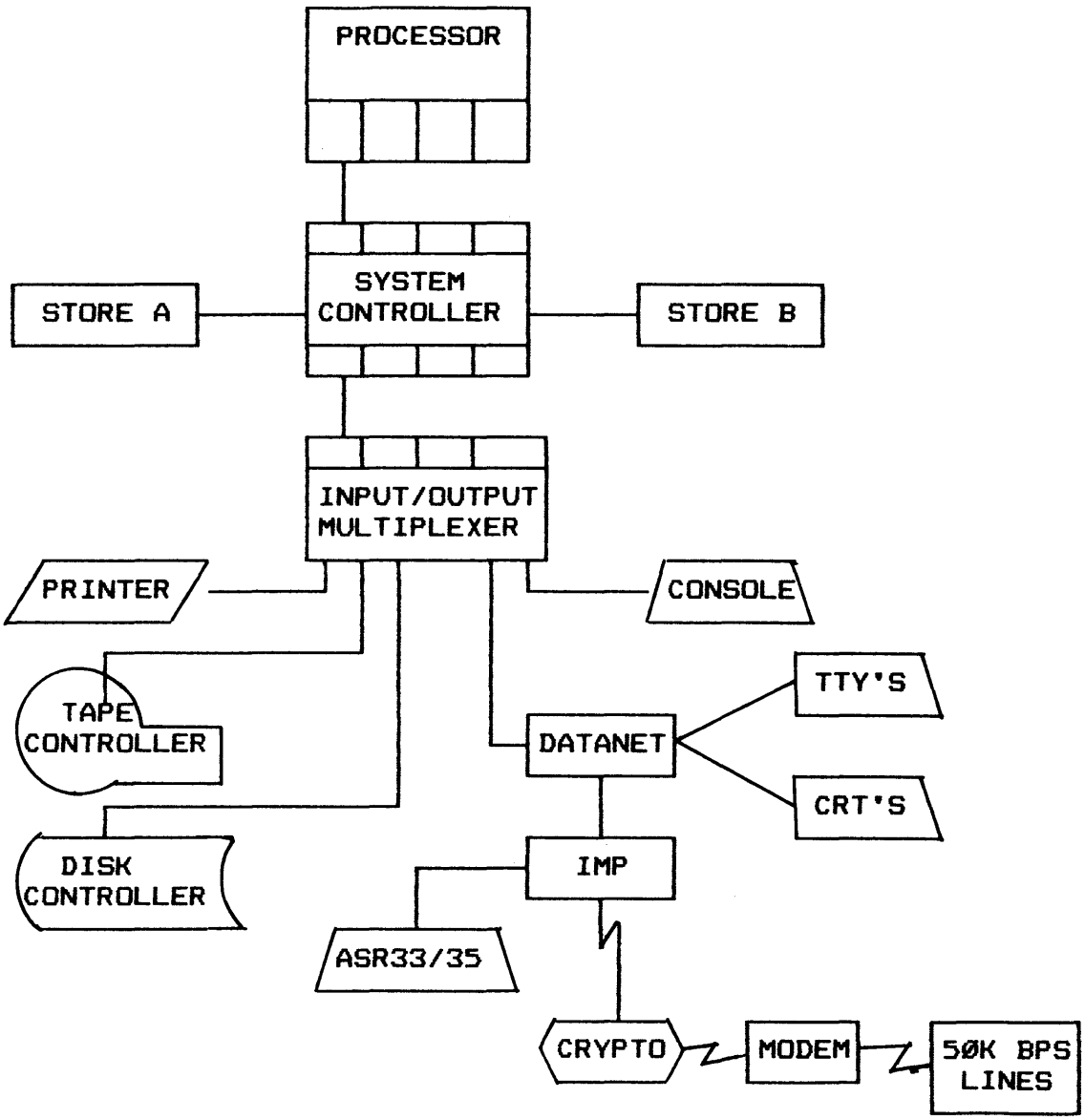

PICTORIAL REPRESENTATION OF A CONNECTION

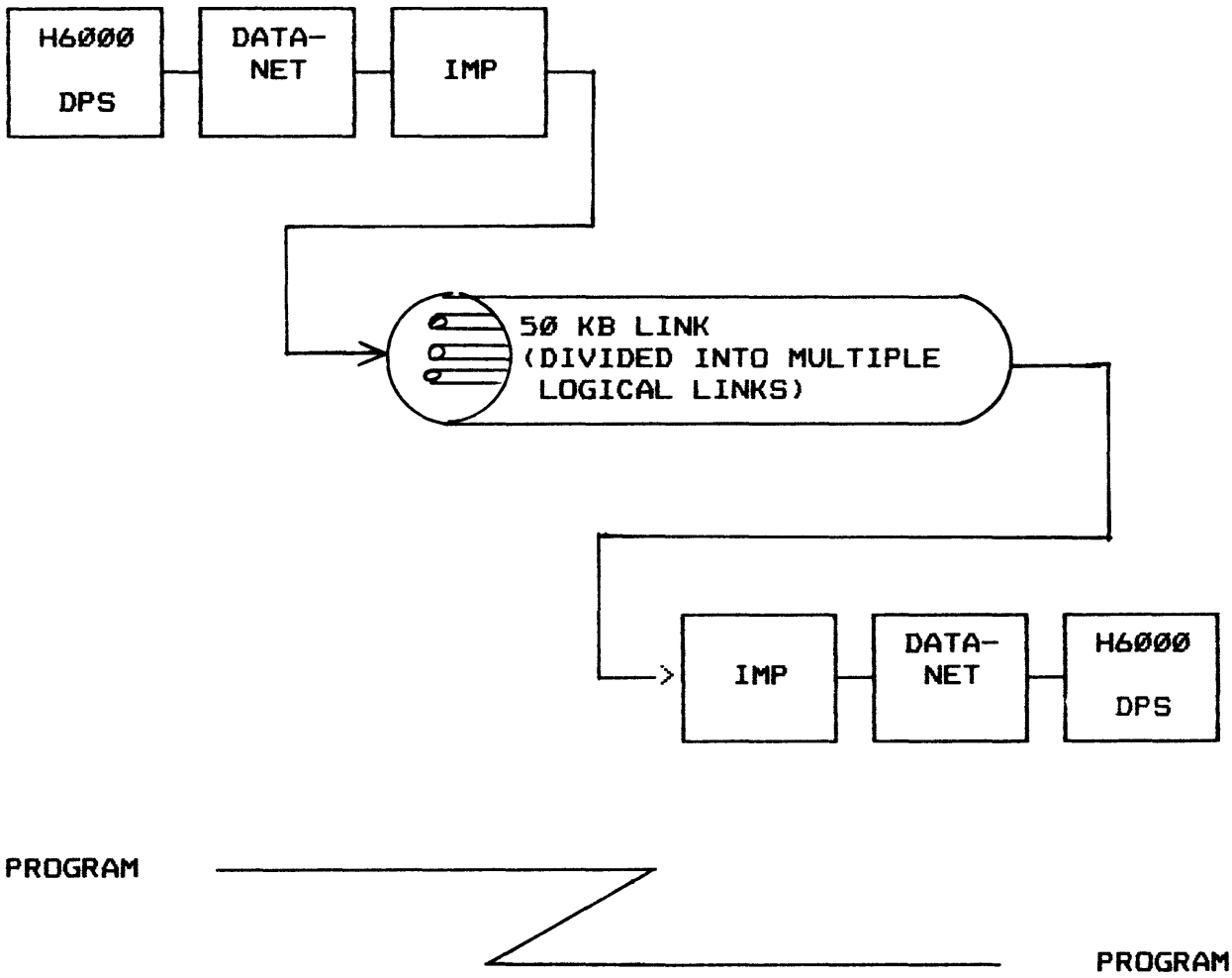

EXAMPLE OF LINKING H6000/DPS

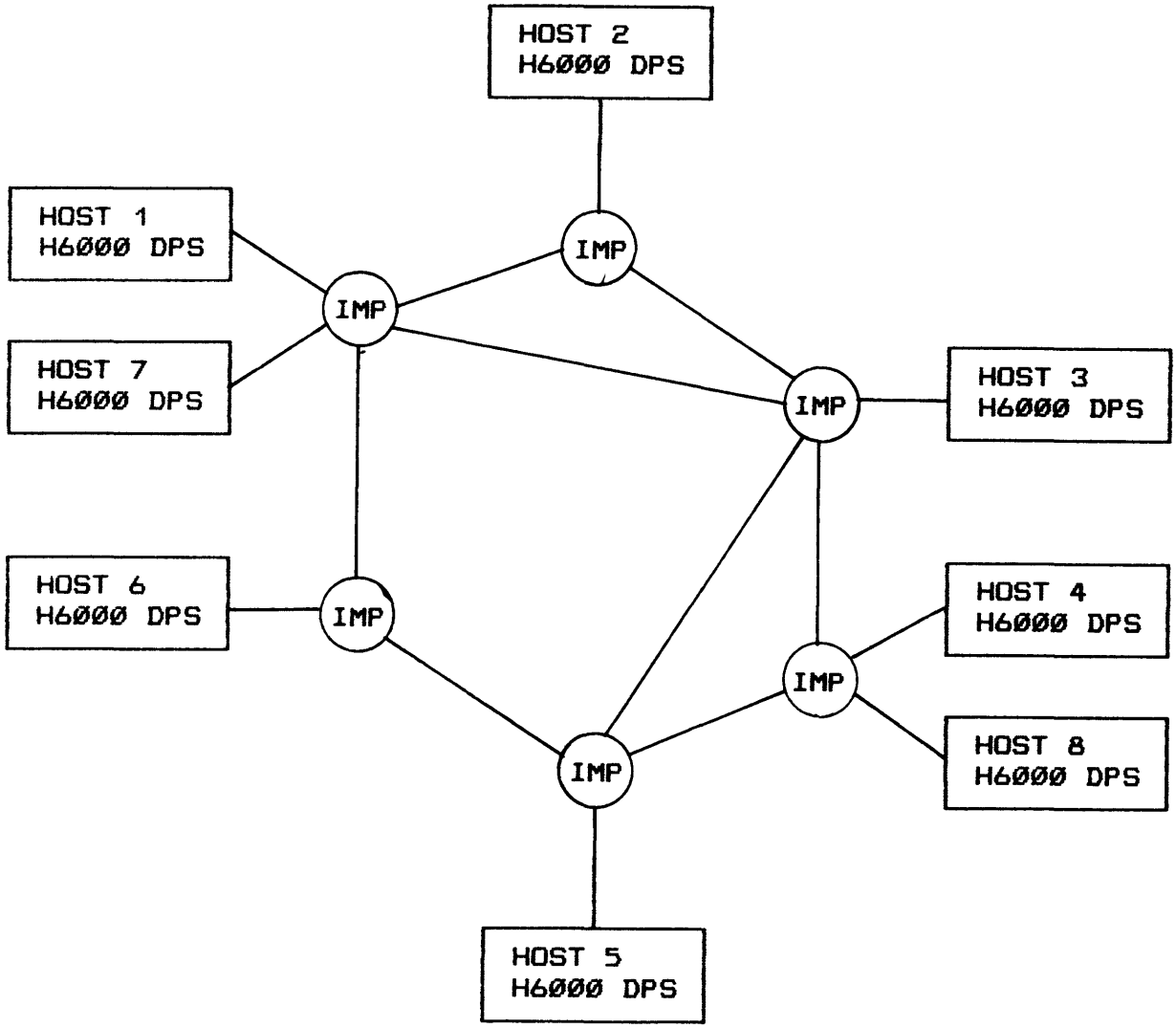

PACKET SWITCHING

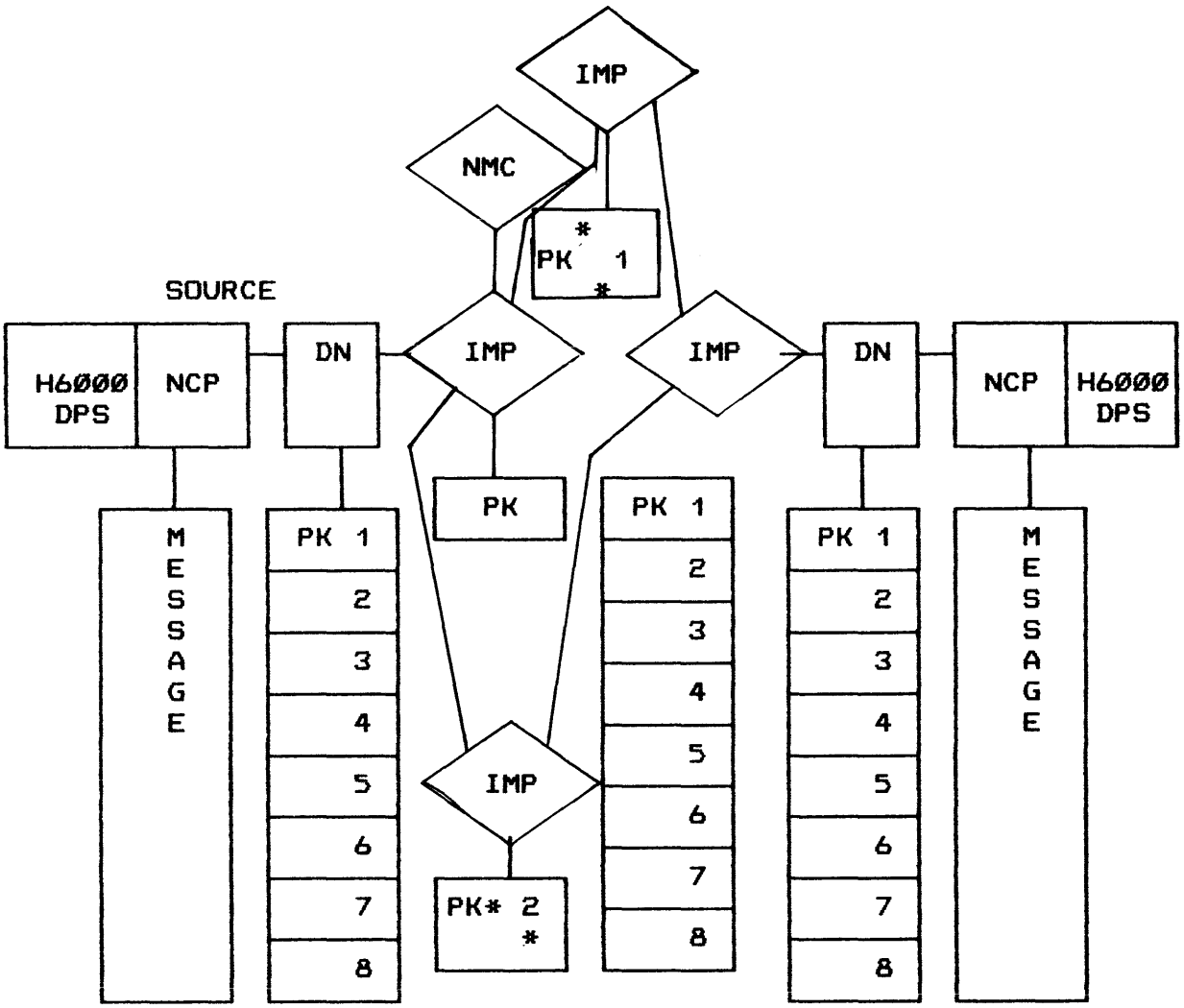

WIN CONFIGURATION

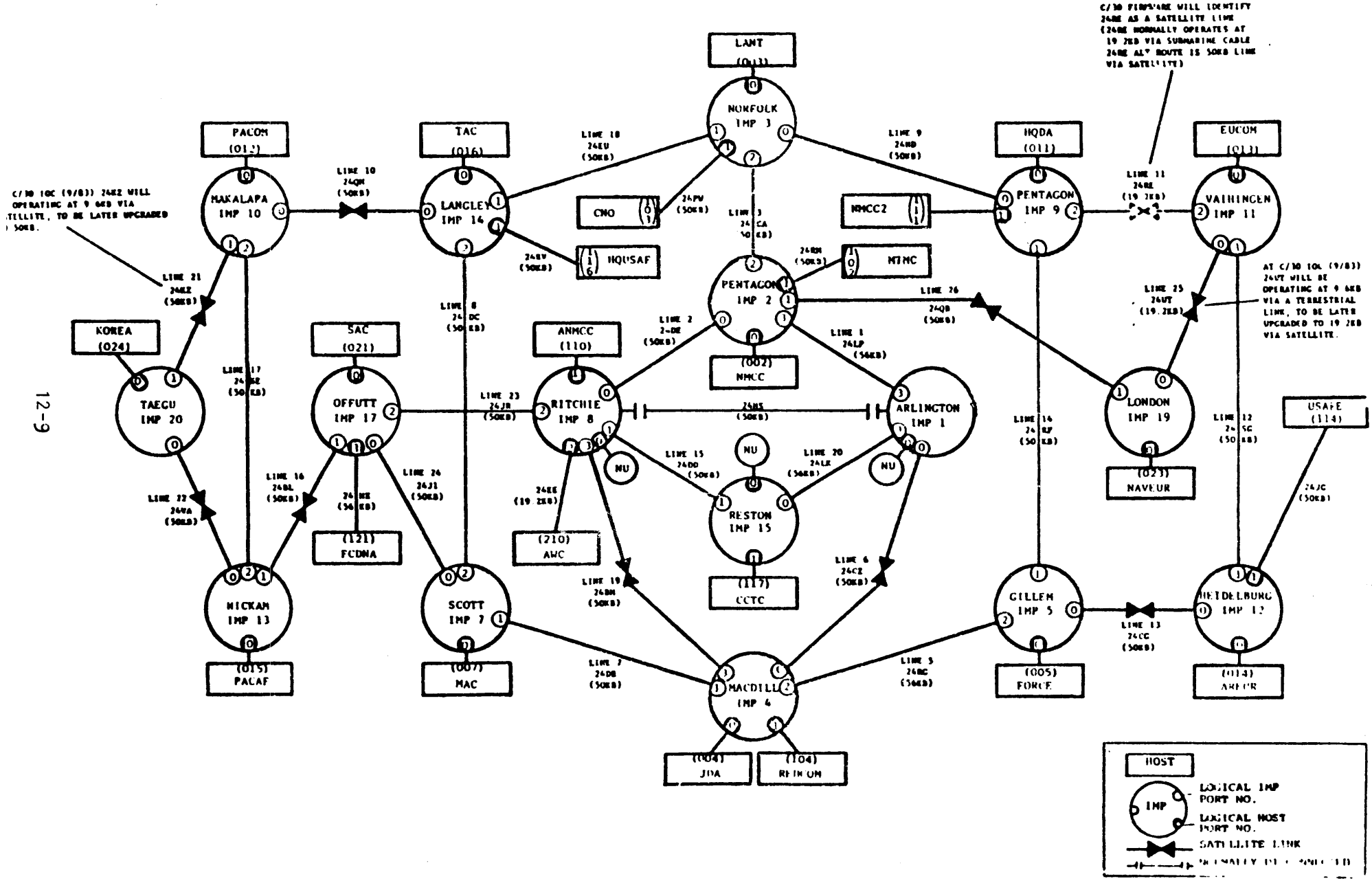

SECURITY VIOLATIONS

- LOCAL SECURITY VIOLATION BEFORE/AFTER CONNECTION
  - PER
  - PIC
- NETWORK SECURITY VIOLATION DURING CONNECTIONS

NETWORK SECURITY

WHAT DOES IT DO?

WHAT CHECKS ARE PERFORMED?

WHAT HAPPENS IF A VIOLATION OCCURS?

WIN SOFTWARE

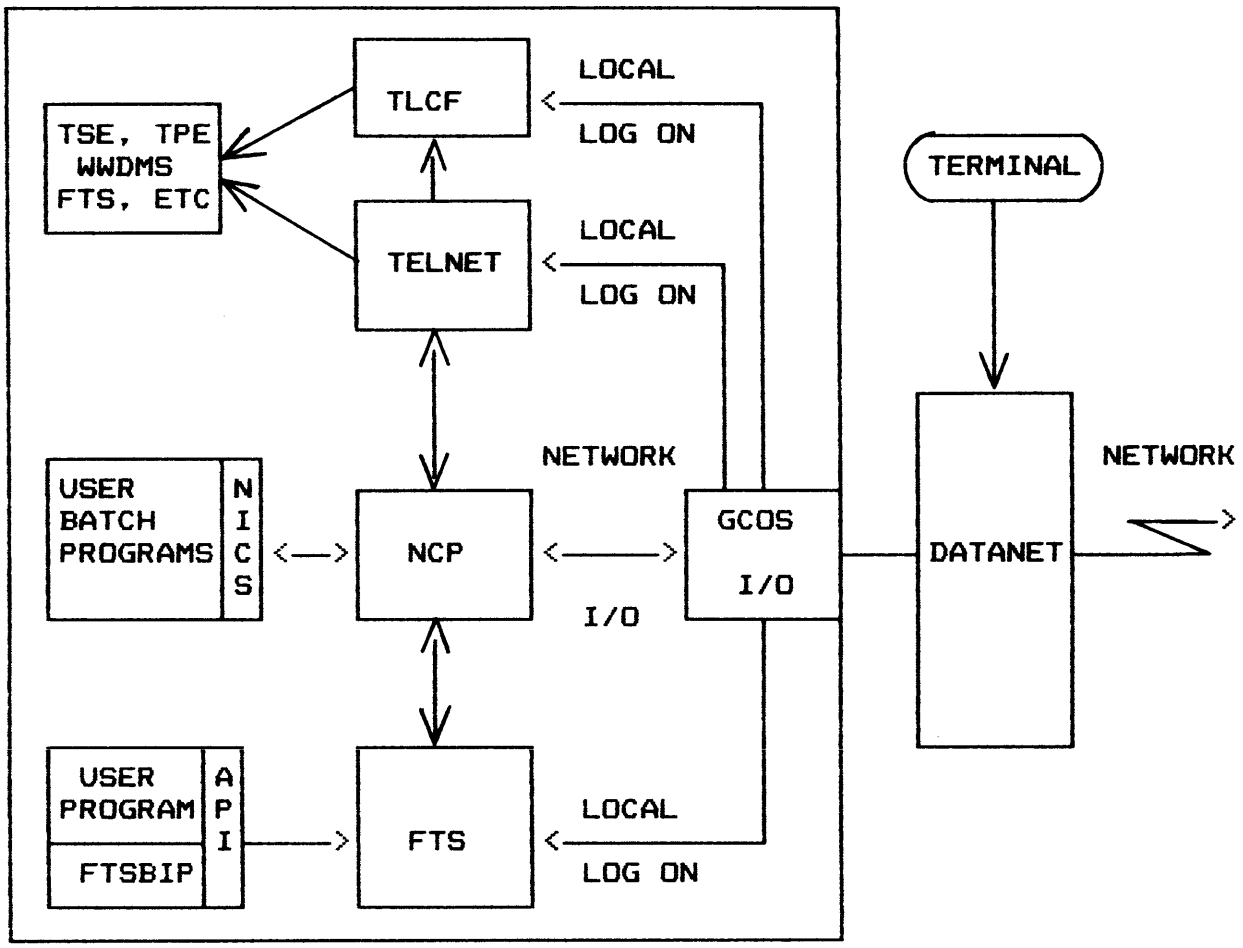

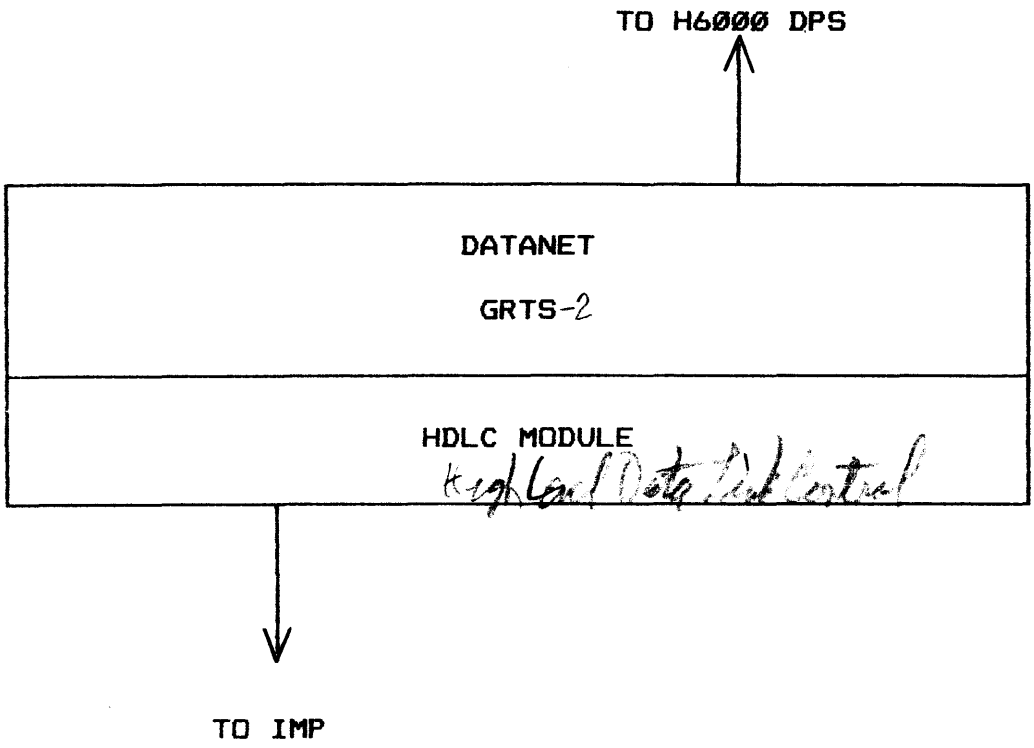
TO H6000 DPS
DATANET
GRTS-2
HDLC MODULE
TO IMP

TELE CONFERENCING (TLCF)

- MULTIPLE USERS
- MESSAGE ORIENTED
- CONFERENCE CHAIRMAN & SIX alternates
- PARTICIPANT
- CONFERENCE NAME
- PDAC CAPABILITIES
- AUTOMATIC MESSAGE DISPERSAL
- MESSAGE QUEUING
- TRANSCRIPT
- FLOOR

TERMINAL NETWORK INTERFACE

(TELNET)

- ALLOWS TERMINAL/USER TO BECOME PSEUDO TERMINAL AT REMOTE SITE.
- SUPPORTS 63 PSEUDO TERMINALS.
- ALLOWS USER TO UPDATE DATA FILES REMOTELY.
- ACCESS TO ANY DAC PROGRAM AT ALLOWABLE SITES.
- VOCAB TELNET TO LIST & EXPLAIN COMMANDS.

WWMCCS INTERCOMPUTER NETWORK (WIN)

FILE TRANSFER SERVICE (FTS)

FILE TRANSFERS send/receive programs files, etc

JOB EXECUTION

MESSAGE EXCHANGE

NETWORK CONTROL PROGRAM (NCP)

NCP IS THE HEART OF NETWORKING CAPABILITY.

- CONTROLS ALL NETWORK'S I/O
- ESTABLISHES AND MAINTAINS NETWORK CONNECTIONS FOR USER PROGRAMS
- CONTROLS ACCESS TO THE NETWORK
- COMMUNICATES WITH REMOTE HOST
- ACCOMMODATES MULTIPLE SIMULTANEOUS USERS:
  - BATCH PROGRAMS
  - TERMINAL USERS

OPERATOR INPUT MESSAGES

??? NET STRT [MODULE] (EOM)

START WIN module(s)

MODULE = NCP

TLNT

FTS

TLCF

OPERATOR INPUT MESSAGES

INFORM [SNUMB] [OPTION]

SNUMB = NCP (NETWORK CONTROL PROGRAM)

FTS (FILE TRANSFER SERVICE)

TLNT (TELNET)

TLCF (TELECONFERENCE)

SNUMB (USER PROGRAM)

OPTION = With the exception of TLCF each program has its own set of options.

EXAMPLE:

OPERATOR INPUT: ???INFORM FTS (EOM)

SYSTEM RESPONSE: OPTION???

Enter option at this time.

EXAMPLE:

OPERATOR INPUT: ???INFORM NCP (EOM)

SYSTEM RESPONSE: NCP: OPTION???

OPERATOR INPUT MESSAGES

Workload Sharing

??? WLS [verb] (EOM)

Verb = Auto disposal of workload

DSI Disable Share In

DSO Disable Share Out

ESI Enable Share In

ESO Enable Share Out

MAN Manual disposal of workload

TEST check status of WLS @ site, status/disaster, e

VOCAB list of verbs

SYSTEM OUTPUT MESSAGES

SAMPLES:

*BCR MT i cc dd FTS L = nnnnn F = nnnnn, CEA?
Block count error

*BTIH MT i cc dd FTS NA?

Blank tape in Header

FTS: PLEASE MOUNT PACK xxxxx FOR CMID nnnn

*GET,F#pp CMID#nnnn TAPE#xxxxx-sss FOR userid

SYSTEM OUTPUT MESSAGES

SAMPLES (Cont'd.)

```
*LOCATE NEXT inout REEL FOR FTS xxxxx-sss
 MT i cc dd TAPE = xxxxx FCB = xxxxx EA#?


 NCP:  LOCAL IMP DISCONNECTED


 NCP:  MESSAGE FROM OPERATOR AT XXXXXXXX
       MESSAGE ........


 NCP:  REMOTE HOST xxxxx IS UNREACHABLE (tt.ttt)


 NCP:  STARTUP, (N)ETWORK OR (W)RAPAROUND?
```

SYSTEM OUTPUT MESSAGES

SAMPLES (Cont'd.)

TCLF: ENTER MESS-

:WLS: snumb, jclass CAN FIND NO SHARE-IN
HOST ENTER RESPONSE:

[SPAWN, END, RECOVER]-

:WLS: (SNUMB) host, jclass, REQUESTS SHARE IN
ENTER RESPONSE: [YES, NO, (EOM) = "YES"

TOPIC XIII

FILE MANAGEMENT SYSTEM (FMS)

Objectives: Upon completion of this topic, the student will be able to:

1. List the capabilities of FMS.
2. Perform saves and restores of selected catalogs and files.
3. Perform recoveries during save or restore operation.

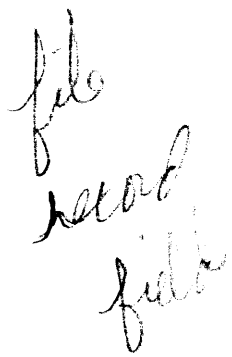

OVERVIEW AND CONCEPTS

SPACE AND ACCESS MANAGEMENT

ONLINE MASS STORAGE

PERMANENT USER FILES

TEMPORARY USER FILES

PERMANENT SYSTEM FILES

TEMPORARY SYSTEM FILES

FILE SYSTEM STRUCTURE

SYSTEM MASTER CATALOG

USER MASTER CATALOG

CATALOGS/SUB CATALOGS

FILES

FILE SYSTEM STRUCTURE

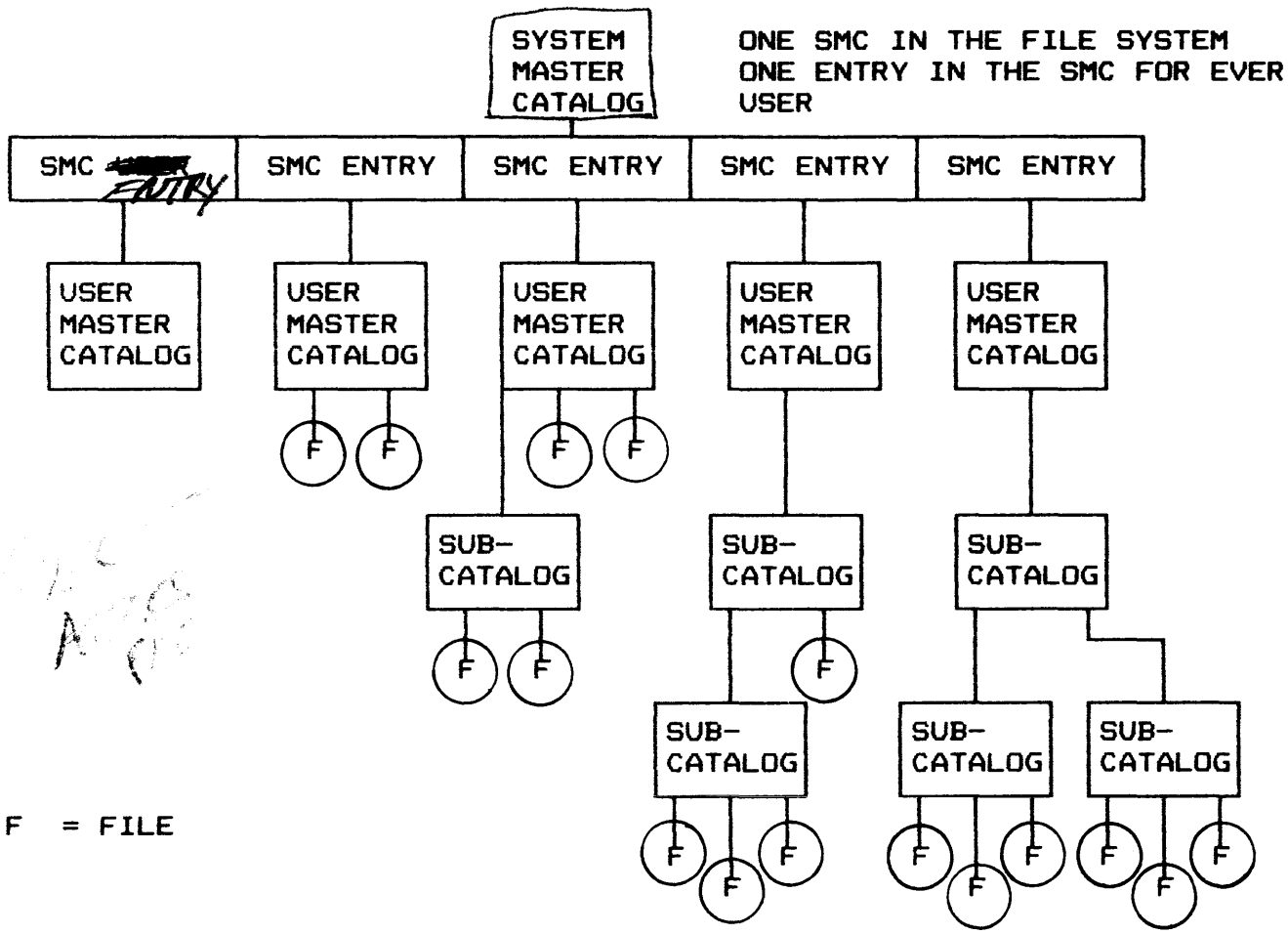

FMS SAVES

SPAWNED BY OPERATOR

TYPES

- SYSTEM
  - MASTER SAVE/RESTORE
  - USER SAVE/RESTORE

- TOTAL everything
- FULL one UMC
  - . RANGE from-to
  - . DONTDO/DOONLY
  - . DEVICE perm/tmvol
- PARTIAL
  - . SINCE if free acty since certain date
  - . INCREMENTAL set up by user

SAVE REPORTS

TYPES OF SAVES

TOTAL EXAMPLE

```
$ SNUMB
$ IDENT
$ USERID
$ FILSYS
$ PRIVITY
SAVEMAST  LISTOPT/YES/
$ TAPE9 PS,X1D,,,,PERM-SAVE
$ TAPE9 XS,X2D,,,,PERM-COPY
$ ENDJOB
```

TYPES OF SAVES

RANGE

HASHING CONCEPT

OPTIONS ON SAVEMAST DIRECTIVE

SEQUENTIAL/CONCURRENT PROCESSING

ADVANTAGES

TYPES OF SAVES

RANGE EXAMPLE

```
$ SNUMB
$ IDENT
$ USERID
$ FILSYS
$ PRIVITY
SAVEMAST RANGE/00,16/,LISTOPT/YES/
$ TAPE9   PS,X1D,M,99999,,RNGSAVE
$ ENDJOB
```

TYPES OF SAVES

DONTDO EXAMPLE

```
$ SNUMB
$ IDENT
$ USERID
$ FILSYS
$ PRIVITY
SAVEMAST  DONTDO/HONEYWELL/,LISTOPT/YES/
$ TAPE9  PS,A7D,99999,,DONTDOSV
$ ENDJOB
```

TYPES OF SAVES

DEVICE EXAMPLE

```
$ SNUMB
$ IDENT
$ USERID
$ FILSYS
$ PRIVITY
SAVEMAST DEVICE/ST1/,LISTOPT/YES/
$ TAPE9   PS,R3P,,99999,,DEVSAVE
$ ENDJOB
```

FOR REMOVABLE PACK:

```
SAVEMAST DEVICE/181PK,P3454/,LISTOPT/YES/
```

TYPES OF SAVES

SINCE capturing new data since last save

DATE AND TIME OPTION ON SAVEMAST DIRECTIVE

ADVANTAGES OF SINCE SAVE

RETENTION site-specific

TYPES OF SAVES

SINCE EXAMPLE

```
$ SNUMB
$ IDENT
$ USERID
$ FILSYS
SAVEMAST SINCE/MMDDYY,HH.MMM/,LISTOPT/YES/
$ TAPE9  PS,X1D,,,,PARTIAL-SAVE
$ TAPE9  XS,X2D,,,,PARTIAL-COPY
$ ENDJOB
```

TYPES OF SAVES

INCREMENTAL

SAVEMAST OPTIONS

USER OPTIONS REQUIRED

ADVANTAGES

DISADVANTAGES

RETENTION OF SAVE TAPES

TYPES OF SAVES

INCREMENTAL EXAMPLE

```
$ SNUMB
$ IDENT
$ USERID
$ FILSYS
$ PRIVITY
SAVEMAST INCR,LISTOPT/YES/
$ TAPE9  PS,B3D,,99999,,INCRSAVE
$ ENDJOB
```

TYPES OF RESTORES

APPLIES TO PERMANENT FILES

- SITE RESTORES
  - TOTAL
  - FULL
  - PARTIAL
- USER RESTORES
  - STRUCTURE
  - RESTRICTIONS
  - ADVANTAGES

TYPES OF RESTORES

REMOVING RESTORE-LOCK

RERUN JOB

USE OF DOONLY AND DONTDO OPTIONS ON DIRECTIVE

SPECIFY RESTORE-LOCK FILES OPTION ON THE USER DIRECTIVE "RESTORE"

RESTORE REPORT

TYPES OF RESTORES

FULL

THERE ARE FOUR CATEGORIES OF A FULL RESTORE

RANGE

DONTDO

DOONLY

DEVICE

TYPES OF RESTORE

DEVICE

THERE ARE TWO APPROACHES TO RESTORING FILES AND CATALOGS TO A DEVICE

FIRST APPROACH:

INPUTS GENERATED VIA A SAVEMAST DIRECTIVE WITH DEVICE OPTION.

RESTORE DIRECTIVE WITH NO OPTIONS SPECIFIED

PROCESSING INCONSISTENCIES MAY OCCUR DUE TO:

- HASH CONTENTION
- MULTIDEVICE FILES
- FILE JOURNALING AND DUPLICATING
- RESTORING CATALOGS
- RESTORING FILES

TYPES OF RESTORES

RANGE OPTION

MORE FLEXIBLE AND EFFICIENT

RESTOREMAST OPTION "RANGE /M,N/

RANGES FROM ONE TO 32 SMC CLASSES

USES ANY MASTER SAVE TAPE AS INPUT

TYPES OF RESTORE

DEVICE

SECOND APPROACH TO RESTORING CATALOGS AND FILES TO A DEVICE:

SAVE TAPES GENERATED VIA SAVES OTHER THAN DEVICE

DEVICE DIRECTIVE THAT SPECIFIES A SPECIFIC DEVICE

PROCESSING INCONSISTENCIES MAY OCCUR DUE TO:

CATALOG RESTORING

RESTORING FILES

REMOVABLE DEVICES

TYPES OF RESTORES

PARTIAL

SINCE RESTORES ONLY

OPTIONS AVAILABLE

ORDER OF RESTORE newest files first (LIFO)

FREQUENCY

TYPES OF RESTORE

ROLLFWD

TOPIC XIV

DPS 6 ARCHITECTURE AND CONCEPTS

Objectives: Upon completion of this topic, the student will be able to:

1. Explain the use and format of the File System.

TASK GROUPS

a way of identifying a user to the sys

GROUP: A SUBSET OF THE SYSTEM'S RESOURCES THAT ARE AVAILABLE TO A USER.

RESOURCES:
- MEMORY SPACE
- PERIPHERAL DEVICES
- DATA
- PROGRAMS

everything pertaining to a job

USER: A PERSON, USUALLY, ASKING FOR ONE OR MORE PROGRAMS TO BE RUN.

TYPES OF GROUPS:

- USER - USED FOR APPLICATION PROGRAMMING
- SYSTEM - USED FOR SYSTEM FUNCTIONS

TASK GROUPS (Cont'd.)

GROUP-ID: A UNIQUE TWO-CHARACTER IDENTIFIER OF THE GROUP. SYSTEM GROUPS USE THE "$" AS THE FIRST CHARACTER.

EX:

SYSTEM	USER
$S - EXECUTIVE	AB
$H - USERS	LØ
$P - PRINT	L9
$B - BATCH	XY
$L - LISTENER	

USER-ID: A UNIQUE IDENTIFIER OF THE USER OF A TASK GROUP. MADE UP OF THREE ELEMENTS: PERSON, ACCOUNT, MODE.

EX:

HIS.D6.A
SMITH.INVENTORY.ABS
JONES.EDUCATION.INC

FILE SYSTEM

FILE: A UNIT OF STORAGE THAT SUPPLIES DATA TO AND/OR RECEIVES DATA FROM A TASK. CAN BE A DEVICE OR A COLLECTION OF DATA ON A MAGNETIC DEVICE, SUCH AS TAPE OR DISK.

DIRECTORY: A SPECIAL FILE THAT CONTAINS A DESCRIPTION OF OTHER FILES AND/OR DIRECTORIES.

ROOT DIRECTORY: THE PRIMARY DIRECTORY ON A MASS STORAGE VOLUME.

PATHNAME: A CHARACTER STRING USED TO REFER TO A FILE OR DIRECTORY.

WORKING DIRECTORY: A GROUP'S CURRENT WORKING POSITION IN THE FILE STRUCTURE.

HOME DIRECTORY: LOCATION IN THE FILE STRUCTURE THE USER IS PLACED AT LOGIN.

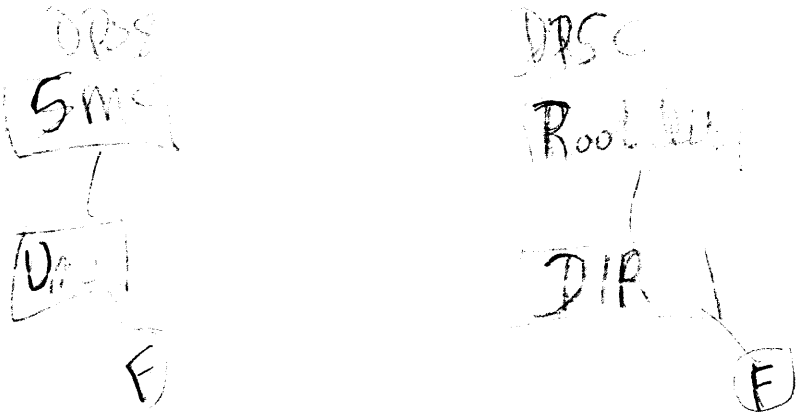

PATHNAMES

NAMES

- 1-12 CHARACTERS (1-6 FOR ROOT DIRECTORY)
  - A-Z (UPPERCASE)
  - Ø-9
  - UNDERSCORE (_)
  - PERIOD (.)
  - DOLLAR SIGN ($)
- 1ST. CHARACTER MUST BE A LETTER OR $

EX:

FILEA

DIR1

DATE_TIME

PROG.A

$CWDIR

PATHNAMES (Cont'd.)

CONSTRUCTION

- SYMBOLS:
  - CIRCUMFLEX (^) - IDENTIFIES ROOT DIRECTORY
  - GREATER THAN (>) - IDENTIFIES A SUBORDINATE LEVEL IN A STRUCTURE
  - LESS THAN (<) - INDICATES THE SUPERIOR LEVEL IN A STRUCTURE

- TYPES OF PATHNAMES:
  - ABSOLUTE
    - FULL - BEGINS WITH ^
    - PARTIAL - BEGINS WITH >
  - RELATIVE - DOES NOT BEGIN WITH ^ OR >. ("RELATIVE" TO THE WORKING DIRECTORY.)

EX: ^SYSVOL>UDD>AUTHORS>SMITH
>UDD>AUTHORS>SMITH
BOOKS>A
<JONES>A
<SMITH>E

PATHNAMES (Cont'd.)

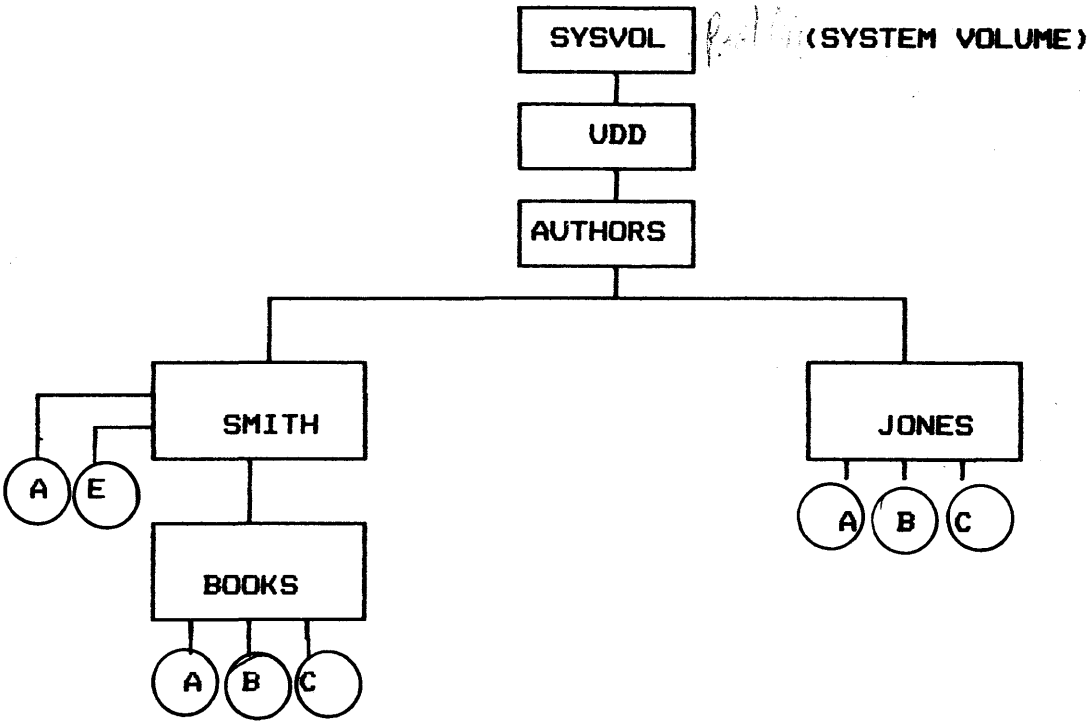

NOTE: RECTANGLES DENOTE DIRECTORIES
CIRCLES DENOTE FILES

PATHNAMES (Cont'd.)

DEVICE PATHNAMES

1. DEVICE FILES: !DEV_NAME

   EX: !LPTØ1

   !CONSOLE

   !VIPØ1

2. TAPE FILES: !DEV_NAME [>VOL-ID[>FILENAME]]

   EX: !MTØØ2

   !MTØ01>VOL3

   !MTØØØ>VOL1>DATA_FILE

3. DISK DEVICE FILES: !DEV_NAME [>VOL-ID]

   EX: !DSKØ2

   !RCDØ1>V23K

TOPIC XV

DPS 6 HARDWARE/PERIPHERALS

Objectives: Upon completion of this topic, the student will be able to:

1. Power-up and power-down of mainframe.
2. Operate peripheral devices.
3. Clear device malfunction.
4. Mount/dismount tapes and disk packs.

DPS 6 MINICOMPUTER SYSTEM MODELS

- microsystem 6/10
- microsystem 6/20
- DPS 6/40
- DPS 6/45
- DPS 6/75
- DPS 6/95

DPS 6 UPGRADE

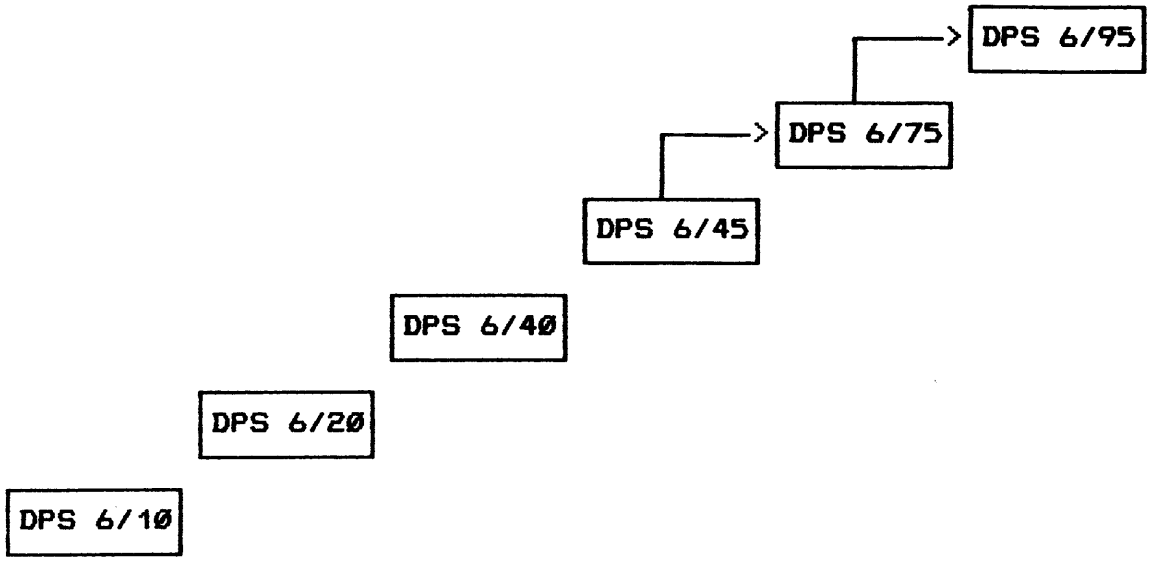

- No change in software

DPS 6 HARDWARE/PERIPHERALS

SAMPLE DPS 6 SYSTEM CONFIGURATION

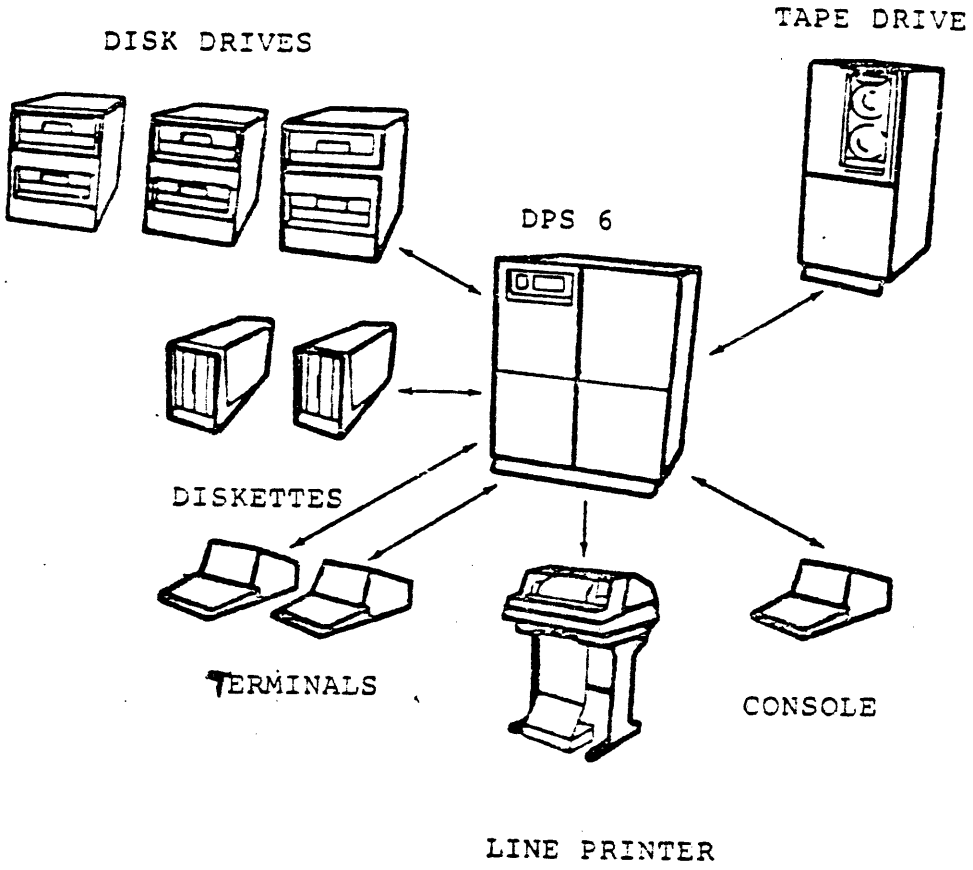

- Defines a specific system environment

- Peripherals interact with Central Processor

DPS 6 SYSTEM COMPONENTS

- o Central Processor Unit (CPU)
- o Multiple Device Controller (MDC)
- o Magnetic Tape Controller (MTC)
- o Mass Storage Controller (MSC)
- o Cartridge Disk Controller
- o Multiline Communication Controller (MLC-16)
- o Memory
- o Power Distribution Unit (PDU)
- o Memory Save
- o MEGABUS – data & power supply gates thru it
  [illegible] slots

MEGABUS CONFIGURATION

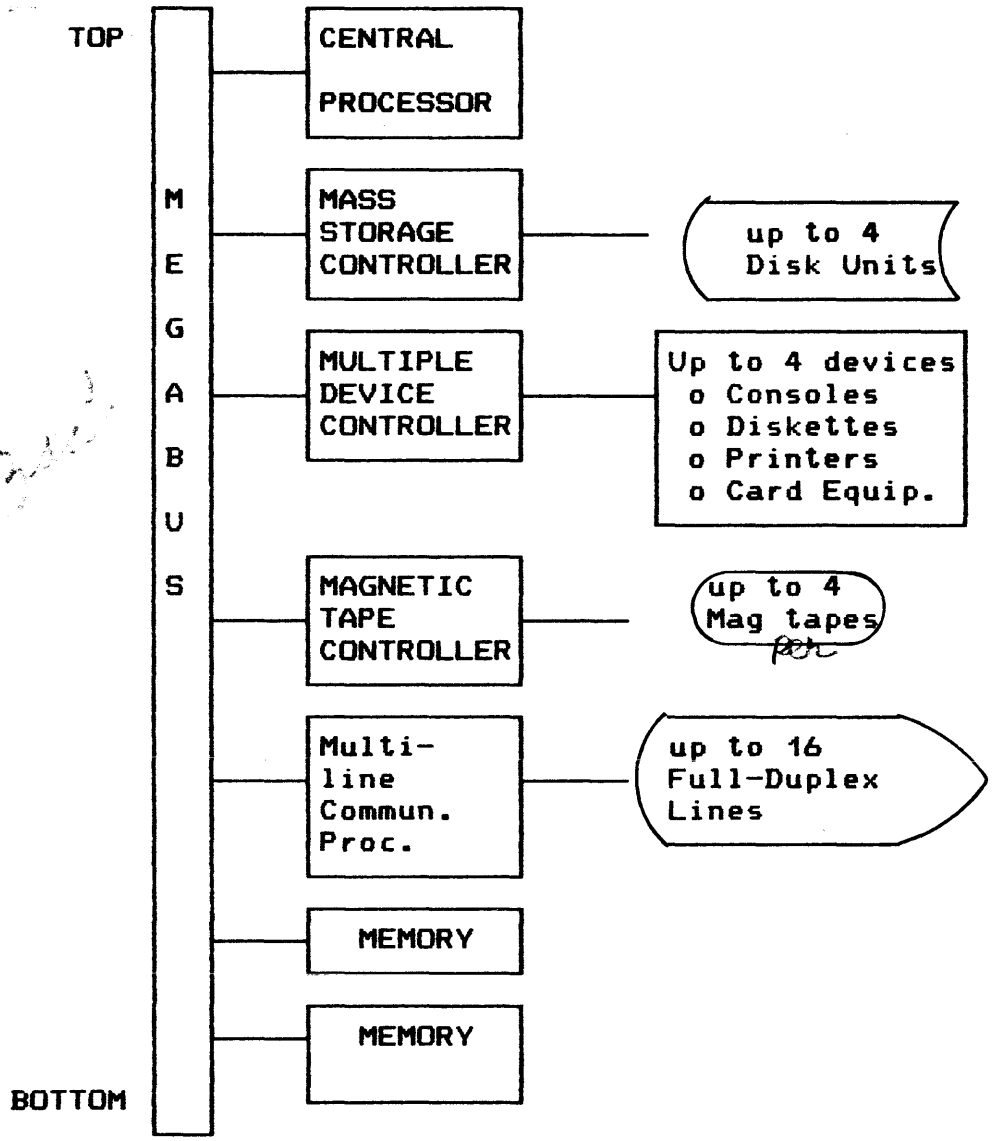

MEMORY SAVE AND AUTO RESTART UNIT (OPTIONAL)

- 2 HOUR BATTERY BACKUP
- AUTOMATIC RESTART
- REFRESHES TWO BOARDS
  - 64K (STANDARD)
  - 256K (HIGH DENSITY)

DPS 6 SYSTEM PERIPHERALS

- TERMINALS
  - CRT
  - Printing Console
  - Operator Console
- Card Reader
- Disk Drives
  - Mass Storage Unit
  - Cartridge Module Unit
- Tape
  - 9 track
  - 800/1600 BPI
  - 1600/6250 BPI
- Printers
  - Line
  - Band or Drum
  - Letter quality
- Diskettes
  - 650K-bytes
  - Maximum of 2

TERMINAL CHARACTERISTICS

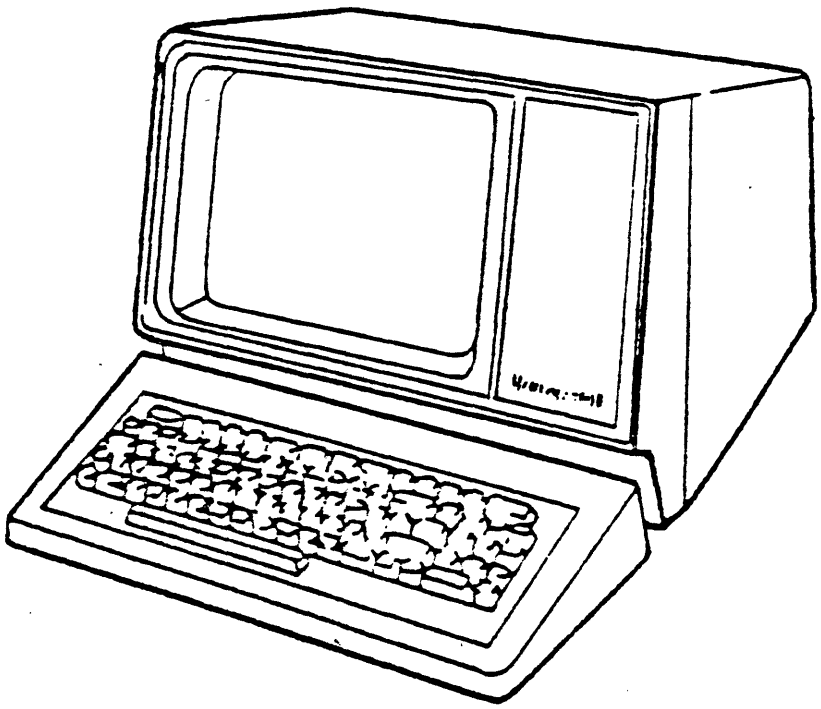

- o Asynchronous mode
- o 12 inch diagonal screen
- o Various keyboard features
  - Standard -- no special functions
  - Data Entry Facility-II (DEF-II)
  - Word Processing (OAS) type
- o Upper/lower case character set
- o Blinking cursor
- o 80 characters per line
- o 24 lines per page
- o Function keys

CONTROLS

- Rear control panel
  - Power ON/OFF
  - Brightness

- Keyboard control keys
  - Shift
  - Control (CTRL)
  - Clear (CLR)
  - Cap lock
  - Return
  - Break (BRK)

TERMINAL PROCEDURES

- Power up
  - Power switch to ON
  - Adjust brightness knob

- Power down
  - Power switch to OFF

- Normal operation
  - All commands may be entered in upper-case mode
  - Only LOGIN command must be entered in upper-case

SPECIAL CONSIDERATIONS

- Do not obstruct any of the vents on the terminal
- Do not place manuals, print-outs, etc., on top of terminal
- Liquids can severely damage the CRT terminal; do not drink around the terminal
- Food should not be consumed around the terminal area
- Be certain that the unit is powered down when performing maintenance
- Screen should be cleaned at least weekly per maintenance requirements

TERMINAL MAINTENANCE

- Maintenance performed weekly

- Procedures
  - Wipe screen with lint-free cloth
  - Check cable connections

MASS STORAGE DEVICE

- MSU9602
  - 67MB capacity
  - Single drive
  - 5-platter surface disks (tracks)

- MSU9604
  - 256MB capacity
  - Single drive
  - 19-platter surface disks (tracks)

- MSU9607
  - 134MB capacity
  - Two 67MB units
  - 5-platter surface disks (tracks)

MSM CONTROLS/INDICATORS

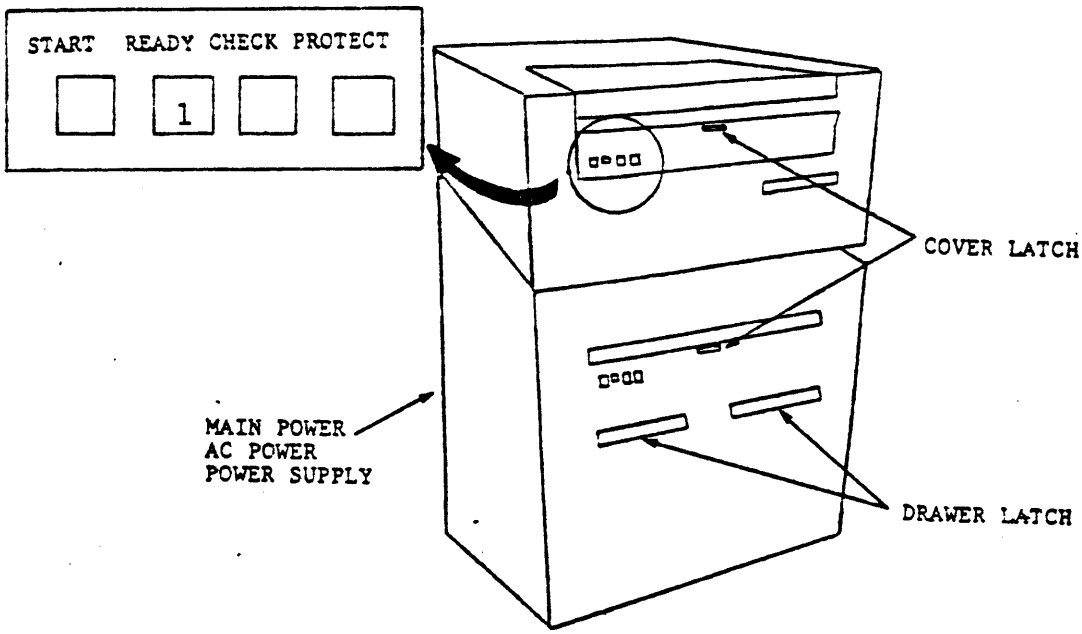

- Controls
  - START
  - READY
  - CHECK
  - PROTECT

- Circuit Breakers behind rear door
  - MAIN POWER
  - AC POWER
  - POWER SUPPLY

- Drawer and cover latch

- Logical address plug

MSM POWER UP/DOWN PROCEDURES

- Power Up
  - Open rear cabinet door
  - Set MAIN POWER/MAIN AC circuit breakers to ON
  - Observe the fans start
  - Wait 2 minutes
  - Close rear cabinet door

- Power Down
  - Depress START button
  - Wait for START/READY indicators to extinguish
  - Open rear cabinet door
  - Set MAIN POWER/MAIN AC circuit breakers to OFF
  - Close rear cabinet door

DISK HANDLING PROCEDURES

- Disk loading procedures
  - Make sure START indicator is extinguished
  - Pull out drawer carefully if lower device
  - Press latch and open access cover
  - Remove bottom cover from pack
  - Mount pack and turn handle clockwise until it stops
  - Remove dust cover
  - Close access cover and drawer carefully
  - Press START and wait until READY lights
  - Press PROTECT (if desired)

- Disk unloading procedure
  - Press START (READY and START lights go out)
  - Pull out drawer carefully
  - Open access cover and wait until spinning stops
  - Place dust cover over pack
  - Turn handle counter-clockwise until a click is heard
  - Carefully remove pack
  - Place bottom cover on pack
  - Close access cover and drawer carefully

MSM MAINTENANCE

- Perform quarterly (Every 1500 hours of power-on time)

- Procedures
  - Power down disk drive
  - Remove disk pack
  - Set main circuit breaker to OFF
  - Clean interior with damp lint-free cloth and alcohol
  - Remove filter by sliding the primary filter from under device
  - Wash filter with warm soapy water
  - Rinse and dry filter thoroughly
  - Reinstall filter
  - Reinstall disk pack making sure no alcohol remains in disk pack cavity

DISK SPECIAL CONSIDERATIONS

- Always keep a disk in its carrying case whenever it is not on a disk drive
- The top cover of a disk pack carrying case is designed so that it cannot be removed until the disk pack is mounted on the spindle
- Never touch disk pack recording surfaces or the spindle mating surface with anything
- Do not expose a disk pack to stray magnetic fields, excessive pressure, sharp impact, or direct sunlight
- Return each disk pack to its own carrying case
- Always store a disk pack in an environment identical to the disk pack drive operating environment
- Store a disk pack flat, resting on its bottom cover
- Packs are identified by a serial number etched on the bottom of pack

CARTRIDGE MODULE DISK CHARACTERISTICS

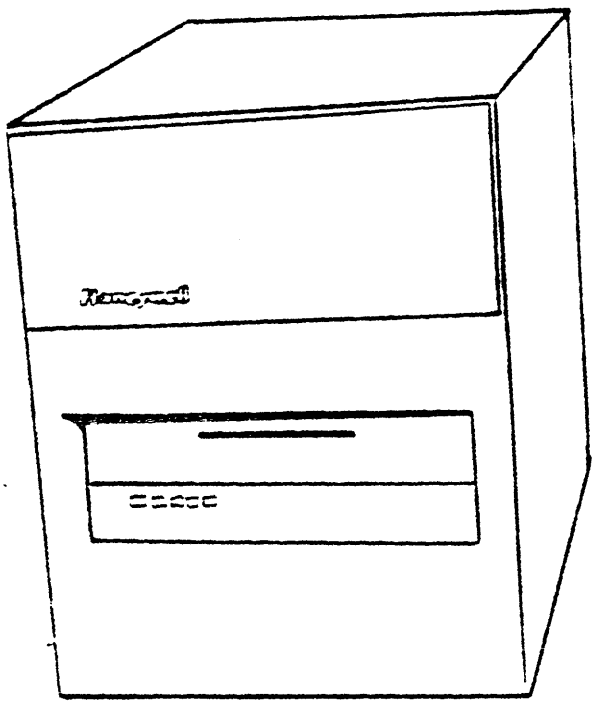

- 26 M-byte type
  - Single/single platter unit
  - 13 M-byte fixed and removable

- 80 M-byte type
  - Single/triple platter unit
  - 13 M-byte removable
  - 67 M-byte fixed

CMD CONTROLS/INDICATORS

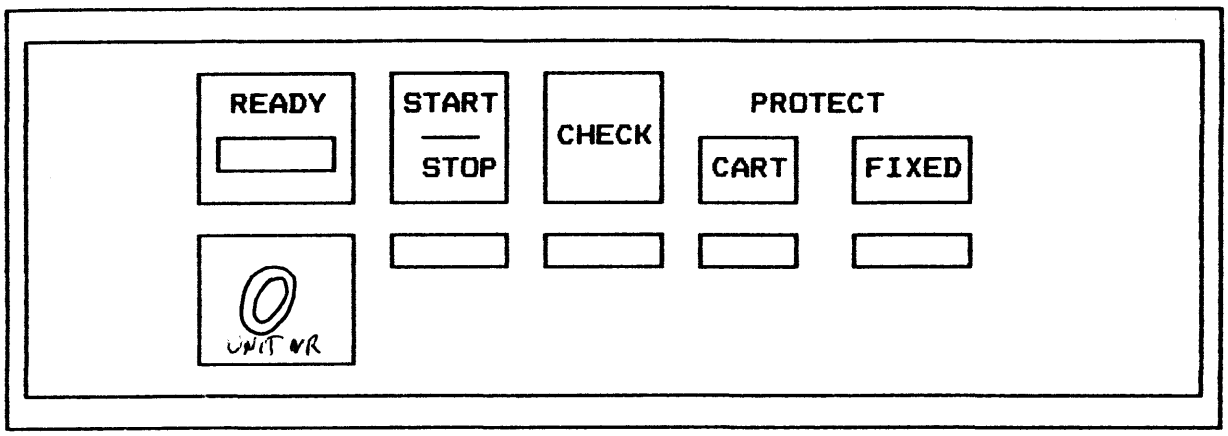

- Controls
  - READY
  - START/STOP
  - CHECK
  - PROTECT CART
  - PROTECT FIXED

- Indicators
  - Ready
  - Start/Stop
  - Check
  - Protect Cart
  - Protect Fixed

CMD POWER UP/DOWN PROCEDURES

- Set main power switch to ON to power up device

- Set main power switch to OFF to power down device

NOTE:

This power switch is generally not turned off unless required by a Honeywell Systems Field Engineer or installation authorized personnel.

DISK LOADING PROCEDURES

- Power-up disk drive
- Press door access latch and open disk pack access door
- Remove disk pack dust cover
- Slide disk pack into drive in direction of arrow, guiding top of pack onto alignment pins
- Close disk access door
- Push START/STOP button to START mode
- READY indicator glows steady when ready

DISK UNLOADING PROCEDURES

- Push START/STOP button to STOP mode
- Wait for ready light to extinguish
- Press door access latch and open disk access door
- Slide disk pack out a few inches and grasp pack handle and pull out
- Place disk pack in dust cover
- Close drive access door

CMD MAINTENANCE

- Performed weekly

- Procedures
  - Set main power to OFF
  - Inspect/replace foam external filter when required (7-14 days)
  - Wipe outside of cabinet with a lint-free cloth
  - Set main power to ON

DISK SPECIAL CONSIDERATIONS

- Prior to loading a disk on the drive, visually check the physical condition of the cartridge disk

- Never touch disk pack recording surfaces or the spindle mating surface with anything

- Do not expose a disk pack to stray magnetic fields, excessive pressure, sharp impact, or direct sunlight

- Return each disk pack to its own cover

- Always store a disk pack in an environment identical to the disk pack drive operating environment

- Store a disk pack flat, resting on its bottom cover

MAGNETIC TAPE CHARACTERISTICS

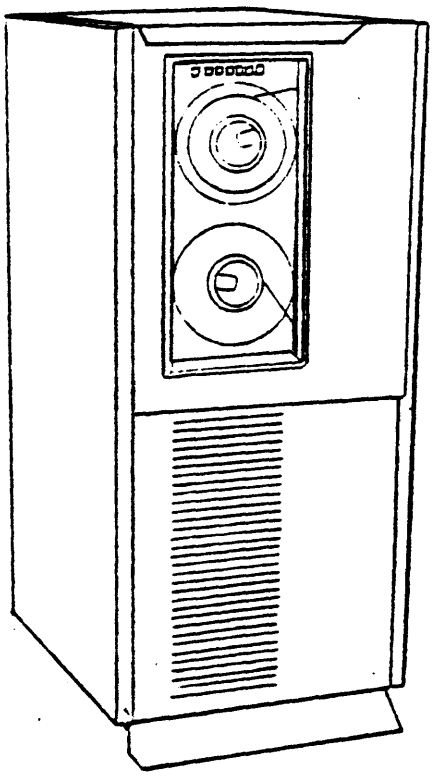

- MTU9609, 10
- 9 track
- DUAL density (NRZI/PE) NON RETURN ZERO INVERTED 800 bpi PhaseEncoded
- 800/1600 BPI
- 45IPS/75IPS
- Transfer rates to a high of 120KB/sec

CONTROLS AND INDICATORS

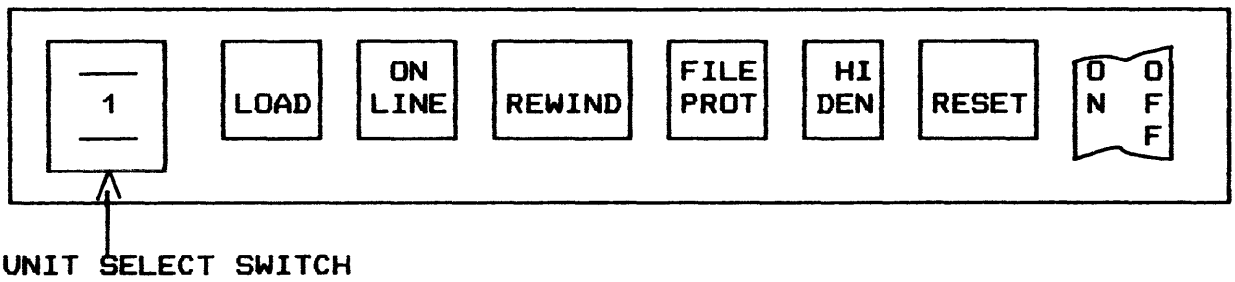

- Unit Select Switch
- LOAD
- ON LINE
- REWIND
- FILE PROTECT
- HI DENSITY (inoperative) on single density units
- RESET
- ON/OFF

POWER UP/DOWN PROCEDURES

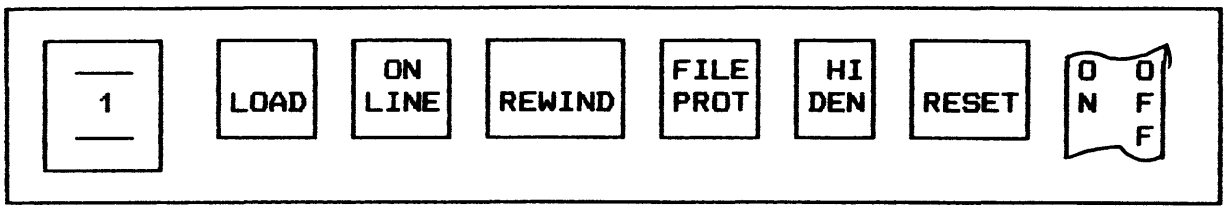

- Power-up
  - Press ON/OFF button to ON
  - ON/OFF lights

- Power-down
  - Press ON/OFF button to OFF
  - ON/OFF extinguishes

LOADING/THREADING TAPE PROCEDURES

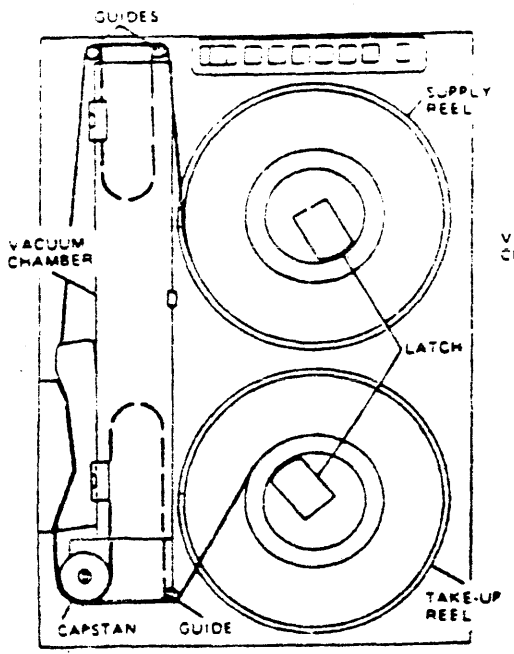

MTU9609

45 IPS TAPE UNIT

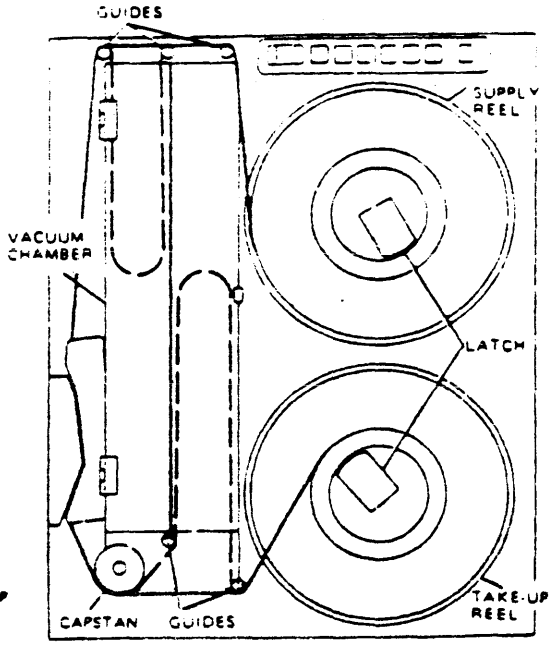

MTU9610

75 IPS TAPE UNIT

- Loading Tape
  - Open front door
  - Remove tape cover strip
  - Open supply reel hub latch
  - Place tape on hub and close latch

- Threading Tape
  - Unwind tape leader clockwise
  - Thread tape
  - Over upper roller guides
  - Through head shield slot
  - Under capstan and lower roller guide
  - Wind clockwise on take-up reel 4 or 5 times
  - Close door
  - Press LOAD
  - Press ON LINE

UNLOADING TAPE PROCEDURES

- Tape (not at BOT)
  - Press ON LINE
  - Press REWIND

- Tape (at BOT)
  - Press ON LINE (above step not done)
  - Press REWIND
  - Open door and hub latch
  - Remove tape
  - Close hub latch
  - Close door
  - Place tape cover strip on tape

SPECIAL CONSIDERATIONS

- Keep tapes clean
- Dust and dirt can reduce the intensity of reading or recording signals by altering the distance between the head and the tape
- Never touch the tape's oxide coating; body oils on tape attract dust and lint
- Keep tape in its dust-free container until just prior to use on the tape drive
- Keep tape containers clean and dust-free inside and out
- Don't leave containers open when tape is in use
- Keep tape transport door closed when the tape drive is not in use
- Avoid dangling the free end of the tape on the floor when changing reels
- Identify reels with adhesive stickers, which are easily removed and leave no residue
- Eraser particles are dirt; change the label - DO NOT erase it

MAINTENANCE

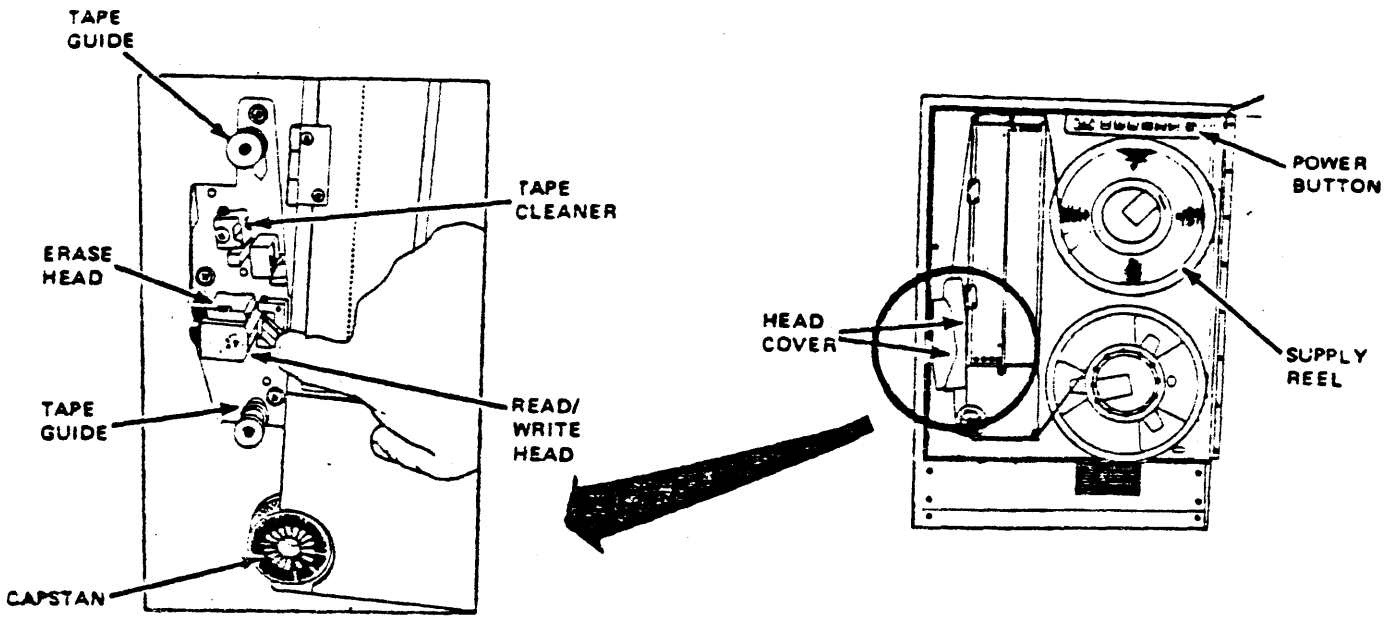

- To be performed daily
- Procedures
  - Open front glass door
  - Remove both head covers
  - Clean entire tape head assembly with a lint-free cloth and approved solvent
  - Use cotton swabs to clean all heads
  - Replace both head covers
  - Open vacuum chamber door
  - Clean with a lint-free cloth and solvent
  - Check all air holes
  - Clean glass door with lint-free cloth and non-spray liquid window cleaner
  - Close glass door

PRINTER CHARACTERISTICS

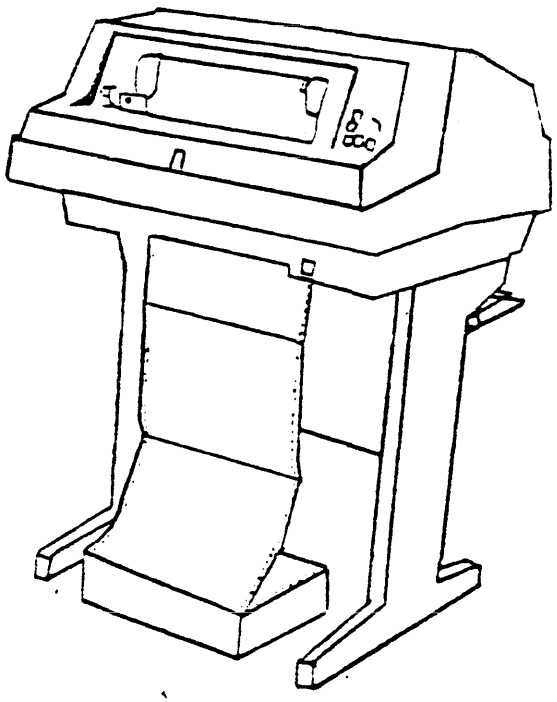

- Band type
- 300/600 LPM
- 132 characters per line
- 64/96 character set
- Maximum 6 copy capacity

BAND PRINTER CONTROLS/INDICATORS

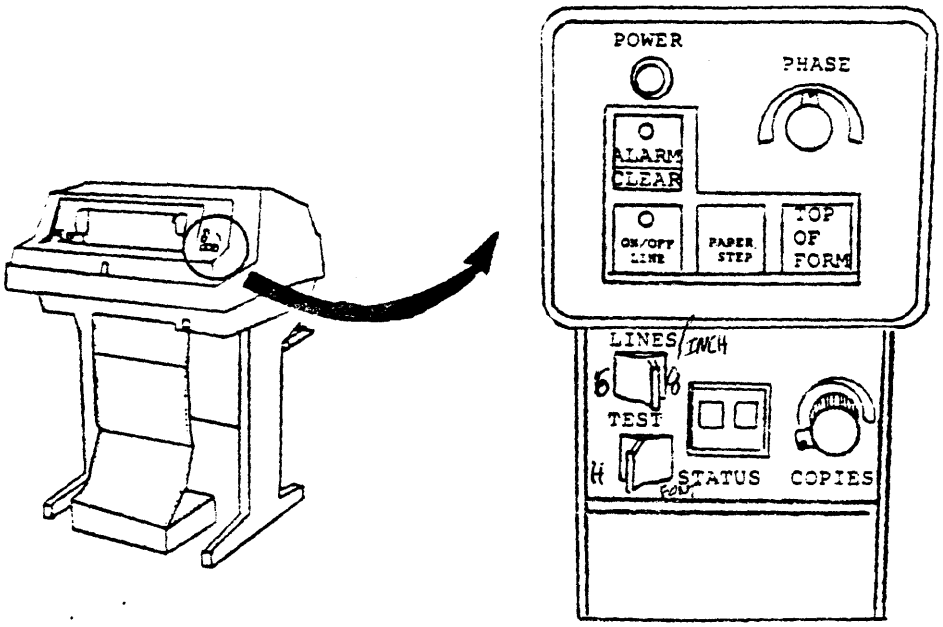

- Operator Control Panel
  - Power ON/OFF switch
  - Power On indicator
  - Alarm/Clear
  - ON/OFF Line indicator
  - Paper Step
  - Top of Form switch
  - Phase control
  - Lines 6 or 8
  - Test switch
  - Status display
  - Copies control
  - FLS/VFU Switch

PRINTER POWER UP/DOWN PROCEDURES

- Power Up
  - Test Switch in OFF position
  - Close all covers
  - Power switch to ON (left)
  - Alarm/Clear indicator must clear in 3 seconds

- Power Down
  - ON/OFF Line switch to OFF
  - Power switch to OFF (right)
  - Power On indicator extinguished

PAPER CONTROLS

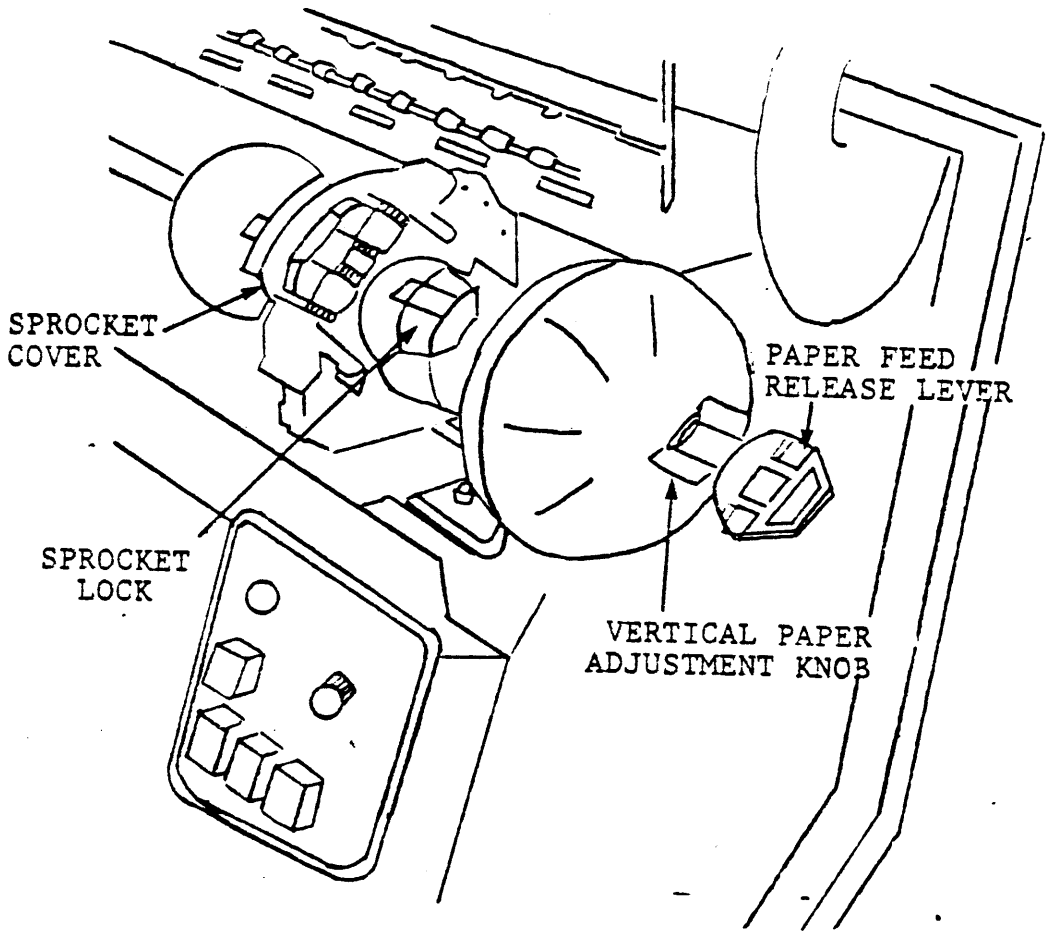

- Paper
  - Paper width controls
  - Paper advance (course or fine)
  - Horizontal positioning
  - Forms thickness
  - Phasing control

INTERLOCKS

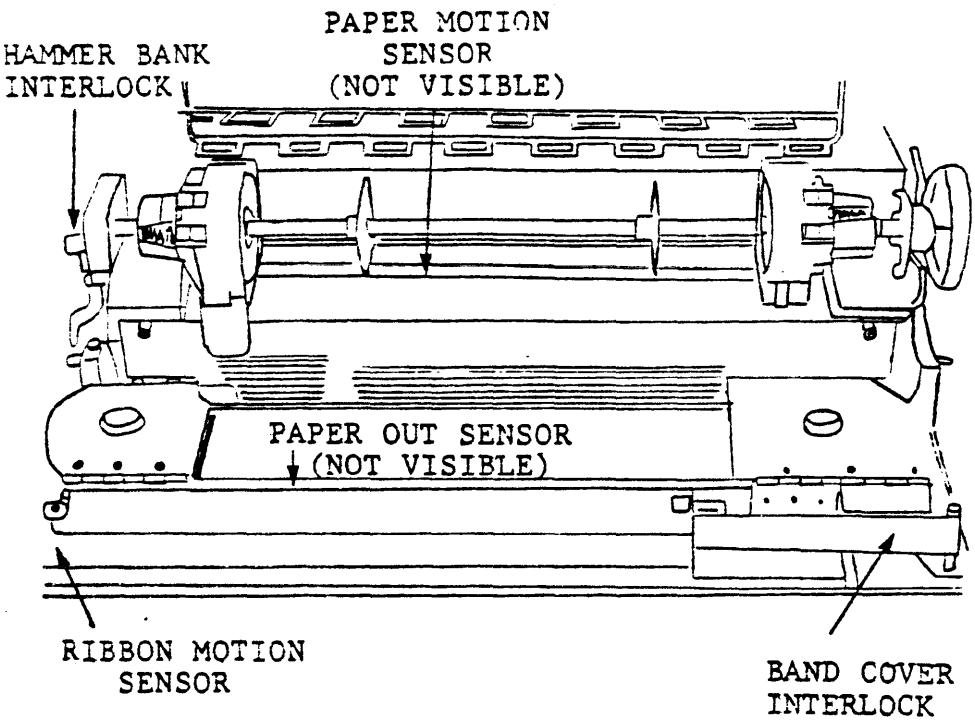

- Hammer Bank
- Paper out
- Paper motion
- Band cover
- Ribbon motion

LOADING PAPER

- Procedures
  - Raise front hood cover
  - Put printer OFF LINE
  - Press TOP OF FORM
  - Paper Feed Release lever to adjust position
  - Open Hammer Bank
  - Position sprockets for paper width
  - Open both tractor (Sprocket) covers
  - Feed paper through underside slot up to sprockets
  - Align paper in sprockets
  - Adjust paper width at right sprocket
  - Adjust form position by left/right sprocket movement
  - Align top of form by vertical paper adjust knob
  - Close Hammer Bank
  - Paper Feed Release lever to RUN position
  - Press Alarm/Clear switch
  - Put printer ON LINE
  - Close front hood cover

REPLACING RIBBON

- Removal
  - Set printer OFF line
  - Set main power switch to OFF (optional)
  - Raise front hood cover
  - Disengage Hammer Bank
  - Open Ribbon Drive Roller arm
  - Grasp cartridge and slide right
  - Remove ribbon and cartridge

- Installation
  - Install new ribbon cartridge on guides
  - Thread ribbon between drive rollers and around first guide
  - Slide cartridge to left and lock in place
  - Thread ribbon around 3 corner guides between mask and band
  - Close drive roller
  - Spin right pulley counter clockwise
  - Engage Hammer Bank
  - Set power switch ON (optional)
  - Close front hood cover

VERTICAL FORMAT UNIT

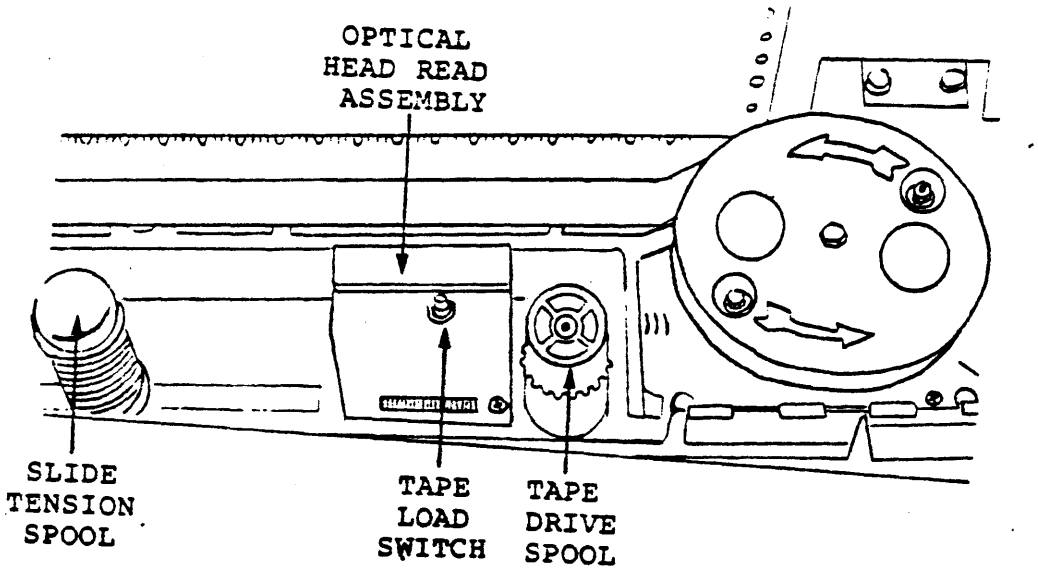

- Device off-line
- Disengage Hammer Bank latch
- Open print band cover
- Loosen slide tension spool
- Place tape around both spools and tension tape
- Press tape start
- Close band cover
- Position paper
- Make printer ready

BAND PRINTER ERROR CONDITIONS

- Power indicator ON not lit
  - Check main power

- Paper jam
  - Clear jam
  - Press Alarm/Clear

- Status error conditions
  - 01 Paper supply low
  - 03 Printer band not locked
  - 04 Hammer Bank open
  - 06 Ribbon Motion fault
  - 09 No tape in VFU reader
  - 10 VFU Memory not loaded
  - 17 Loss of print synchronization
  - 40 Band speed fault
  - 50 System status fault
  - 88 Off-line and ready
  - 77 On-line

BAND PRINTER MAINTENANCE

- Daily
  - Check for print quality
  - General appearance of device

- Weekly
  - Vacuum device

DIU9607 DISKETTE CHARACTERISTICS

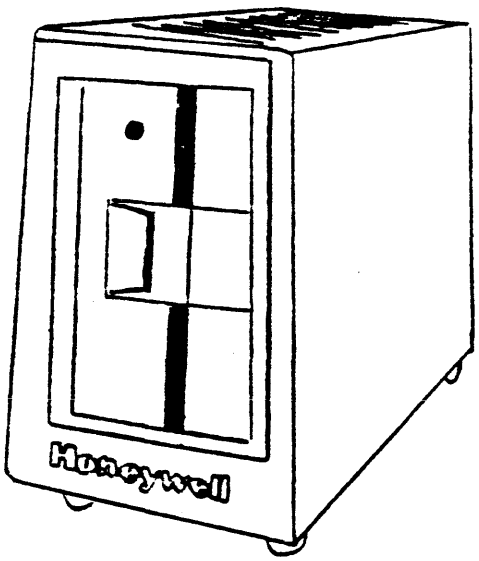

- 5 1/4 inch media
- Single or double-sided
- 256 byte sectors
- 655K byte capacity
- Double density

DISKETTE DEVICE CONTROLS/INDICATORS

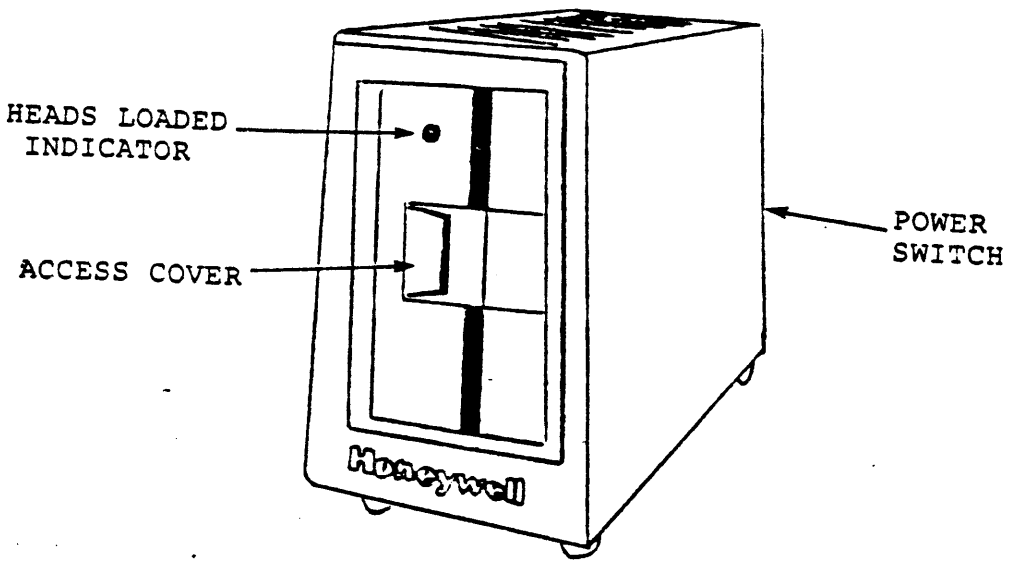

- Operator Control Panel
  - Power switch
  - Access cover button
  - Heads loaded indicator

DISKETTE LOADING/UNLOADING PROCEDURES

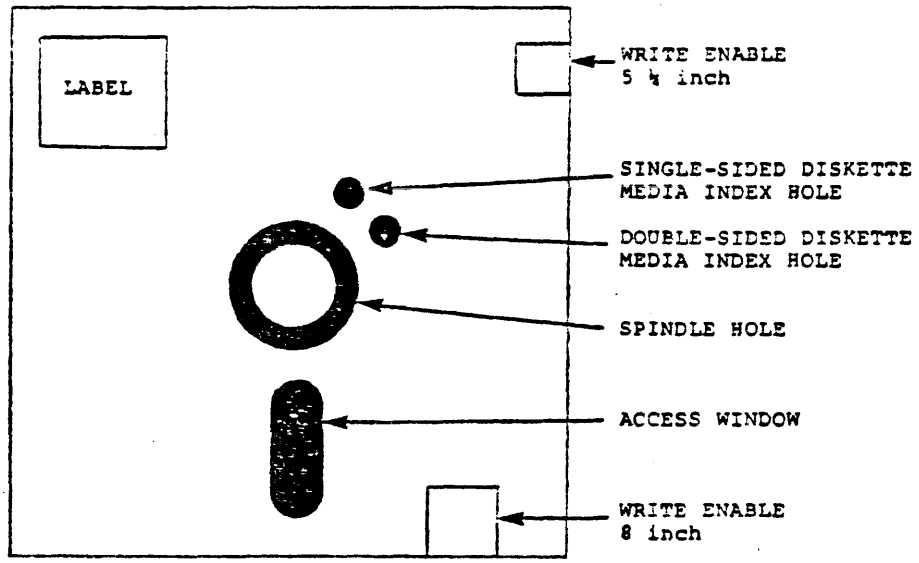

- Loading procedures
  - Set power switch ON
  - Press Access Cover button
  - Insert diskette
  - Close cover
- Unloading procedure
  - Press Access Cover button
  - Remove diskette
  - Close cover
  - Set power switch OFF

DISKETTE DEVICE MAINTENANCE

- Performed monthly

- Procedures
  - Power down diskette
  - Vacuum outside of unit
  - Open access door, vacuum under cover
  - Clean outside of unit with damp cheesecloth
  - Observe any damage to diskette chamber

DISKETTE SPECIAL CONSIDERATIONS

- Diskette material should be stored in an operating environment the same as the diskette device
- Abrupt changes in relative humidity must be avoided so as not to damage the diskette recording material
- Never bundle or use paper clips on diskette recording material
- Store each diskette in its provided envelope when not in use
- Do not expose diskettes to direct sunlight
- Labels affixed to diskette material must not obstruct the index sensing hole
- Keep diskette clean
- Dirt and smudges can reduce the intensity and accuracy of reading or recording signals

TOPIC XVI

DPS 6 BOOTSTRAP

Objectives: Upon completion of this topic, the student will be able to:

1. Power-up/power-down the DPS 6 system.
2. Perform bootstrapping procedures to the DPS 6 system.
3. Identify system halts and utilize correct operator response.

BOOTSTRAP PURPOSE

- SYSTEM START-UP
  - Bootstrapped into main memory
  - Configuration Load Manager (CLM)
  - System task group ($S)
  - Start_up.EC file

- STAGE 3: FULLY SPECIALIZED SYSTEM START-UP
  - CLM_USER file fully operational
  - Start_up.EC file permanent
  - Total hardware environment
  - Routinely performed

SYSTEM POWER-UP PROCEDURES

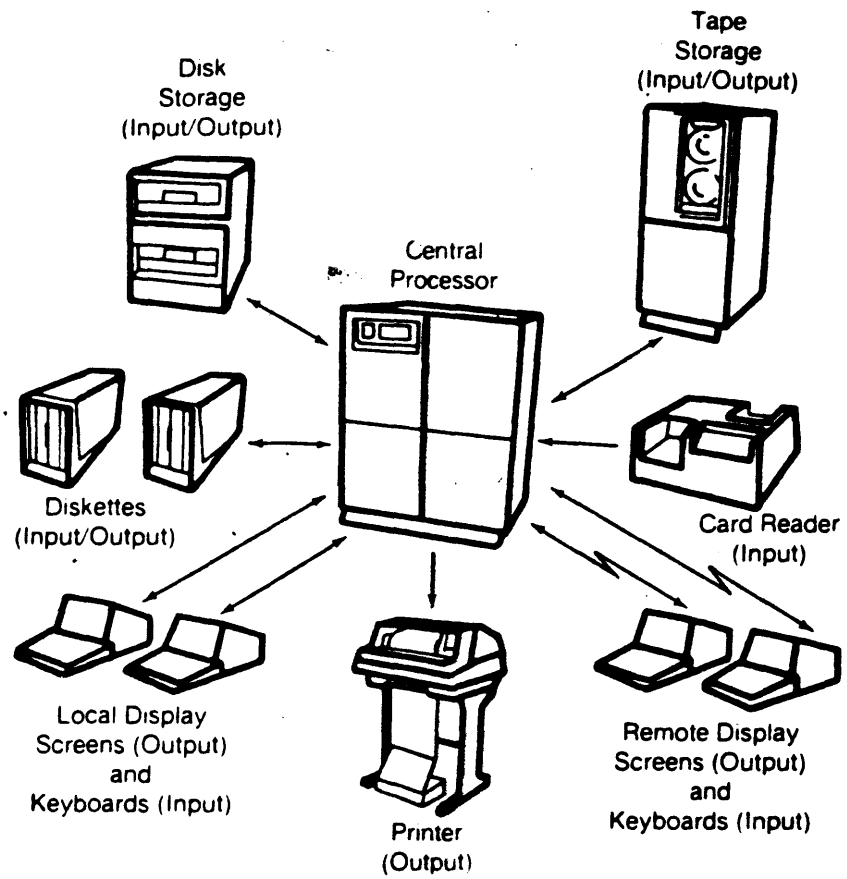

- Turn key in PANEL SECURITY keylock to the right
- Set system console power control switch to ON
- Set red central processor power control switch to ON
- Mount system pack on disk device designated as boot device
- Power up boot disk device
- Power up remaining peripheral devices (diskettes, printer, tape driver, etc.)

BOOTSTRAP DEFINITION

- Following power-up procedures, additional operator action is needed to get the system up and running

- These additional operator actions are known as bootstrap procedures or boot procedures

- During bootstrap operation, the system will:
  - Perform internal checks and tests to be sure all is well internally
  - Read bootstrap and intermediate loader records from system disk pack into memory
  - Read configuration file that defines all system hardware
  - Read and execute start up files for various components required for a proper operating environment
  - Nofity operator via the console that the above actions are occurring

- Bootstrap procedures are performed by utilizing either:
  - Central Processor Control Panel, or
  - Operator's Console with System Control Facility (SCF)

CENTRAL PROCESSOR CONTROL PANEL

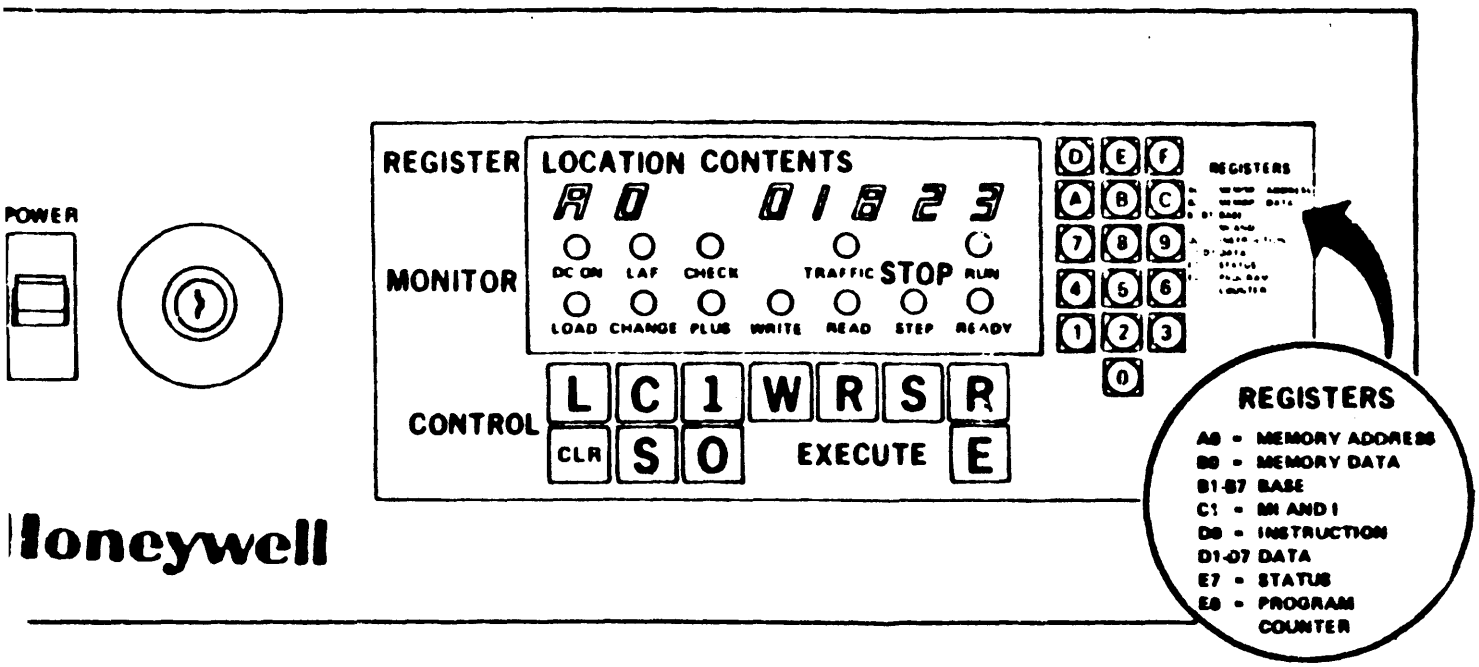

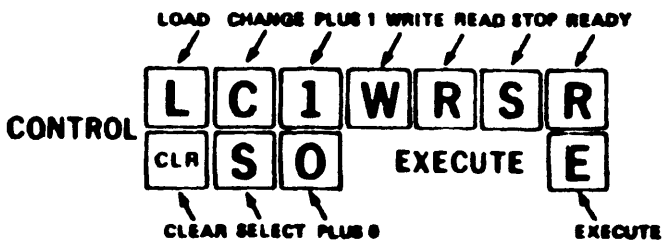

CONTROL KEYS IDENTIFIED BY FUNCTION

CONTROL PANEL

- CONTROLS/INDICATORS
  - Power
  - Panel Security
  - Register Display
    - Location
    - Contents
  - Monitor Indicators
    - DC on
    - Check
    - Traffic
    - Run
    - Load
    - Change
    - Stop/Step
    - Ready

BOOTSTRAP PROCEDURES

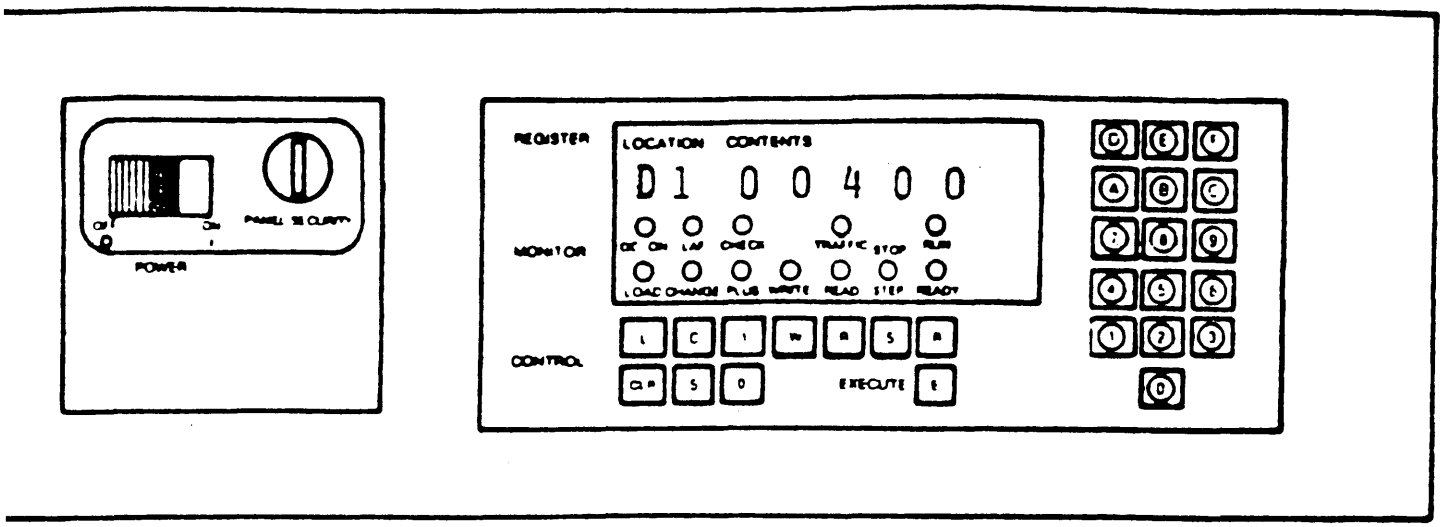

CENTRAL PROCESSOR CONTROL PANEL

- STOP Rod
- CLEAR
- LOAD
- EXECUTE

— QLT (Quality Logic Test)
(Memory Check)

- STOP
- SELECT (Location) 01
- CHANGE (Contents)
- READY
- EXECUTE

OPERATOR CONSOLE KEYBOARDS

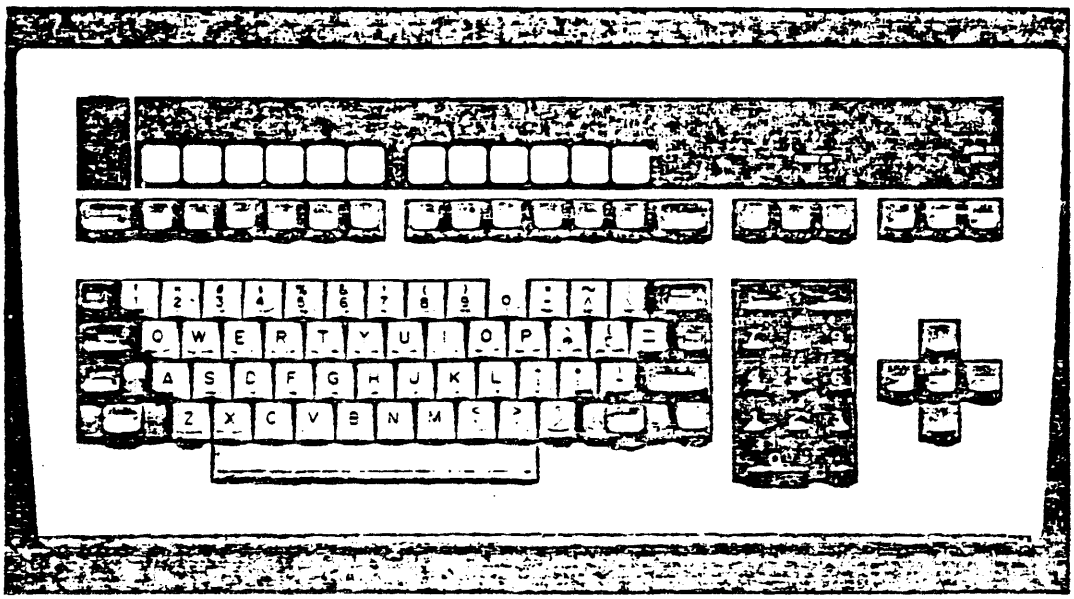

VIP7301 Standard Edit Keyboard

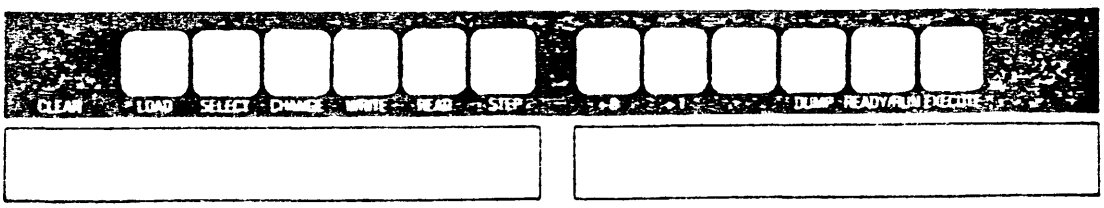

SCF Overlay for the VIP7301 Standard Edit Keyboard

NORMAL SCF BOOTSTRAP PROCEDURES

- Performed after system power-up

- Check that word "PANEL" is displayed in status line at bottom right of console screen

- Bootstrap key sequence:
  - STEP
  - CLEAR - wait for CHECK indicator to extinguish
  - LOAD
  - EXECUTE - wait for TRAFFIC and CHECK indicators to extinguish
  - EXECUTE
  - ESC ESC # c/r - change to CONSOLE mode

- To reboot the system:
  - Change from CONSOLE to PANEL mode using ESC ESC # c/r
  - Perform bootstrap key sequence shown above

CONSOLE OPERATION

- Set Date
  - SD "YYYY/MM/DD HHMM" Return
  - TIME
  - NOW

- $S
  - Executive System Group
  - Command response

- $H
  - User Group

POWER-DOWN PROCEDURE

- Press red STOP key on central processor control panel
- Power down all storage devices
- Unload and store the media, if applicable to site
- Power down all peripheral devices
- Press POWER Switch on central processor unit to OFF position

TOPIC XVII

DPS 6 OPERATOR COMMANDS AND FILE SYSTEM UTILITIES

Objectives: Upon completion of this topic, the student will be able to:

1. Define different types of storage media.
2. Create a disk volume.
3. Determine disk space usage.
4. Initialize a tape volume.

COMMAND LINE STRUCTURE

FORMAT:

command-name [arg 1 arg 2 ...arg n]

RULES:

1. Command line has up to 252 characters.
2. Arguments are separated by one or more spaces (No space before command name).
3. Two (or more) commands may be entered on a single line by using ";" between each command.
4. A single command may be continued (on another line) by ending the previous line with "&".

ARGUMENTS:

- Types: Positional and Keyword
- Arguments with embedded spaces must be enclosed with quotes (' or ").

ARGUMENTS

POSITIONAL

CONTROL

COMMAND arg1 -arg2 [-opt1]

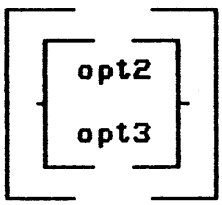

- Individual item of data passed to command
- Optional arguments represented by brackets
- Position in command line indicates which variable data is passed
- Keyword whose value specifies command option preceded by hyphen

MULTILINE COMMANDS

```
DP MYFILE.L &
-DESTINATION "A SITE"
```

```
DP IT &
&
DP MYFILE.L &
-DESTINATION "A SITE"
```

- & as last character of physical line indicates continuation
- First character of continuation line may not be a blank
- & alone overrides preceding lines with &
- Maximum 252 characters

CREATE VOLUME (CV)

```
CV path [ctl_args]
```

- Create or make change to a disk volume

- Path is a positional argument
  - !device_name[>vol_id]
  - Device upon which volume is mounted

- The following control arguments CANNOT be used in the same command line

  -FT vol_id Formats the volume

  -RN vol_id Changes the volume and root directory

  -BT Creates bootstrap records

  -MD n Creates a memory dump bootstrap record and a file DUMPFILE to contain a dump of memory

  May be used with -BT argument

DISK SPACE USAGE

```
GQ !RCM00>FSD

GQ ^FSD>UDD>PAT

GQ

SHRINK ^GSD>UDD>PAT>TEST
```

- Space used on disk or within a directory
- Defaults to working directory
- Total number of sectors and amount used
- Available areas
- Shrink-disk files only

CREATING TAPE VOLUMES

```
IT !MT900 -VOL TAPEA
IT !MT900 -VOL TAPEB -FSET TAPEB
IT !MT900 -VOL TAPEC -FSET TAPEB
```

- Formats and labels tape volume for output
- Multivolume set
- FSET continuation feature
  - Set name remains the same
  - Volume names must be unique
- Volume and set names 1-6 characters in length

DETERMINING WORKING DIRECTORY

User enters:

LWD

System Response:

^WKVOL>MARGE>COURSES

LWD – list working dir

- Full pathname of working directory

- No arguments

CHANGING LOCATION IN FILE SYSTEM

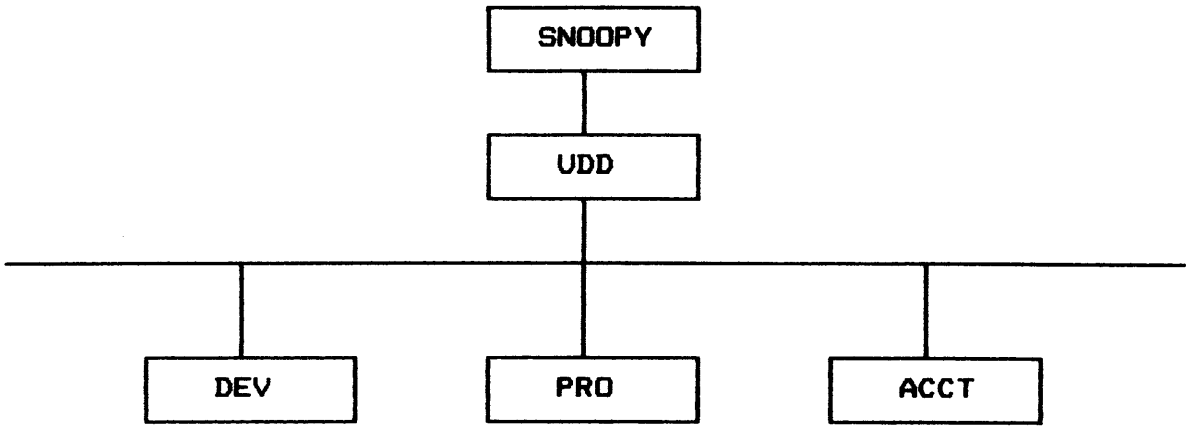

- Change Working Directory (CWD) command

- Any valid pathname

- Examples:

  CWD ^SNOOPY>UDD>DEV

  CWD <PRO

  CWD <<

  CWD UDD

LIST NAMES (LS)

```
LS [ctl_args]  [entry_name]
```

- List information about one or more files and/or directories contained in the working directory of specified directory

- Control arguments

-PN path	Any valid pathname other than working directory (default)
-F	List only file entries
-D	List only directory entries
-DTL	Detailed listing for each entry

- [entry-name] file or directory name

- Directives

  <cr> - display next screen of output

  Q - quit

LIST NAMES EXAMPLES

```
RDY:
LS

Directory:    ^DATA2>UDD>BOWERS>H408
Time:    1985/05/11 1129.02

    DATA2          IND      40
    DATA2          INX       8
    MASTER         SEQ       8
    NEW_MAST       SEQ       0
    P1             F_R      24
    P2             F_R      24
    PROG1.C        SEQ      16
    PROG1.L        SEQ      24
    PROG1.O        SEQ       8
    PROG2.C        SEQ      24
    PROG2.L        SEQ      48
    PROG2.O        SEQ      24
    SAM1.EC        SEQ       8
    SAMPLE.EC      SEQ       8

Total Sectors:       264
RDY:
```

FILES SYSTEM CONTROL (Cont'd.)

LIST SEARCH RULES - display the currently-defined search rules.

FORMAT: LSR

EX: LSR

RESPONSE: ^SYSVOL (working directory)

^SYSVOL>SYSLIB1

^SYSVOL>SYSLIB2

FILE SYSTEM CONTROL (CONT'D)

LIST MOUNT REQUESTS - display all outstanding mount requests.

FORMAT: LMR

EX: LMR

POSSIBLE RESPONSES:

(AA) MOUNT SYSPK3

(AB) MOUNT A VOLUME ON MSMØØ

(BB) MOUNT TLABL ON MT9Ø1

FILE SYSTEM CONTROL

CANCEL MOUNT REQUEST - Cancel a mount request.

FORMAT: CMR [path] [ctl-arg]

path: volid

^volid

!device [>volid]

ctl-arg: -GID gp_id

EX: CMR

CMR SYSPK3

CMR -GID AA

STATUS SYSTEM (STS)

```
STS  [ctl_args]
```

- Display general system status

- Control arguments

  -ALL List the active files and volume identifiers for all devices

  -SYMPD dev_name List the status of a specific device

  -GROUP List all task groups by group and memory pool identifier, current state of the group and current user_id

  -LBR List all entries on the batch request queue

-AVAIL list all available

SYSTEM STATUS EXAMPLES

- Example 1 (STS -ALL)

```
STS -ALL
SYMPD_NAME CHANNEL DEVICE VOLUME USAGE AVAILABLE_SECTORS VOL/FILE MEMBER
                    TYPE    ID          PHYSICAL  LOGICAL SET_NAME NUMBER
 MSM00      0400     4361 ^S010A   98      3112      389
 MSM01      0480     4361 ^DATA2    3     22856     2857
 MSM02      0500     4363 ^RDC      3    695360    43460
 MSM03      0800     4361 ^DATA3    0    178792    22349   DATA3
 MSM04      0880     4361 ^DATA4    1    168528    21066
 DKS00      1200     2017 ^         D
 DKS01      1280     2011 ^         D   } = dormant
 DKS02      1300     2011 ^         D
 SILENT     C000     3A00 ^         0
 CONSOLE    C000     3A00 ^        23
 LPT00      1380     2000 ^         D
```

- Example 2 (STS -SYMPD MSM00)

```
STS -SYMPD MSM00
 SYMPD_NAME CHANNEL DEVICE VOLUME USAGE AVAILABLE_SECTORS VOL/FILE MEMBER
                     TYPE   ID          PHYSICAL  LOGICAL SET_NAME NUMBER
 MSM00      0400     4361 ^S010A   98      3112      389
```

- **Commands entered at the operator's console**

- **Issued from either $S or $H**

STATUS SYSTEM - OPERATOR ONLY

- Example 1 (STS -GROUP)

```
STS -GROUP
GROUPS:                    mem
L5  STATE:  A  POOL: IE  USER ID:  FRICK.INSTRUCTOR.FSD
L4  STATE:  A  POOL: IB  USER ID:  MOORE.INSTRUCTOR.FSD
L2  STATE:  A  POOL: ID  USER ID:  BOILES.ADMIN.FSD
LØ  STATE:  A  POOL: IF  USER ID:  OCL.DEV.FSD
LF  STATE:  A  POOL: AB  USER ID:  FORSYTH.SYS_ADMIN.ADM
RB  STATE:  A  POOL: AB  USER ID:  RBF_PULL.DSS
$L  STATE:  A  POOL: AB  USER ID:  LISTEN.SYS_ADMIN
NB  STATE:  A  POOL: AB  USER ID:  N_RBF.DSS
NF  STATE:  A  POOL: AB  USER ID:  N_RFF.DSS
SF  STATE:  A  POOL: AB  USER ID:  N_RFF.DSS
SS  STATE:  A  POOL: AB  USER ID:  SWITCHER.SUBSYSTEM.SYS
PQ  STATE:  A  POOL: PQ  USER ID:  OAS.DAEMON
MR  STATE:  D  POOL: AB  USER ID:
MS  STATE:  A  POOL: AB  USER ID:  SEND_MAIL.DAEMON
$P  STATE:  A  POOL: AB  USER ID:  IO.DAEMON
TM  STATE:  A  POOL: AB  USER ID:  NTM.NTM.NTM
$N  STATE:  A  POOL: $N  USER ID:  CP.ADMIN.
$O  STATE:  A  POOL: $N  USER ID:  NOI.ADMIN.
$E  STATE:  A  POOL: $$  USER ID:  OPERATOR.SYSTEM.OPR
$B  STATE:  D  POOL:     USER ID:
$H  STATE:  A  POOL: AB  USER ID:  HIS.L6.A
$S  STATE:  A  POOL: $$  USER ID:
```

- Example 2 (STS -LBR)

```
STS -LBR
BATCH REQUESTS:
USER ID:   >>UDD>MOORE>BATCH.EC
CMD_IN:    >>UDD>MOORE>BATCH.EC
```

- Commands entered at the operator's console

- Issued only from $S

UTILITIES

SAVE - save specified directories and/or files.

FORMAT: SAVE path out_path [ctl_arg]

ctl_arg: -LEV n

EX: SAVE ^SYSVOL !MT900>SAVTAP>SYSVOL.SV

SAVE DIR1 >UDD>JONES>SAVFIL -LEV 3

RESTORE - restore the specified files previously saved.

FORMAT: RESTORE save_path [start_dir] [ctl_arg]

ctl-arg: -MERGE

EX: RESTORE !MT900>SAVTAP>SYSVOL.SV ^SYSVOL

RESTORE >UDD>JONES>SAVFIL DIR2

RESTORE !MT900>SAVTAP>SYSVOL.SV ^SYSVOL &
-MERGE

DATE/TIME

SET DATE - set system clock to specified date and time.

FORMAT: SD 'yyyy/mm/dd hh [mm [:ss]]'

EX: SD '1981/10/13 1351:35'

SD '1981/11/12/ 0000'

SD "1982/01/05 12"

TIME - display current date and time.

FORMAT: TIME

EX: TIME

response: 1981/01/13 1351 :35.016

STATUS GROUP (STG)

```
STG group_id [ctl_args]
```

- Display the status of the issuing task group or specified task group

- Group_id is a positional argument

- Control arguments

  -TASKS List the status of each task in requested group

  -FILES List names of all files currently associated with the group

STATUS OF GROUPS EXAMPLES

- Example 1 (STG $H)

```
STG $H
$H  STATE:  A   POOL: AB  USER ID:  HIS.L6.A
ERROR OUT:!CONSOLE
USER OUT: !CONSOLE
TASKS:
ST    049  D  AMT
LT    048  W  EC
 CMD IN:  !CONSOLE
 USER_IN: !CONSOLE
```

- Example 2 (STG $L -FILES)

```
STG $L - FILES
$L  STATE:  A   POOL: AB  USER ID:  LISTEN.SYS_ADMIN
ERROR_OUT:!CONSOLE
USER_OUT: !CONSOLE
FILES:
FILE:   ^S010A>ML>MLFILE.EN
 2  4FB3          0
FILE:   ^S010A>USER_REG>TERMINALS
 1  4FB1  0015    0
FILE:   ^S010A>USER_REG>PROFILES
 3  6FB2  0014    0
```

FORMAT OF MESSAGES

OUTPUT MESSAGES

1. (gp-id) message

   Ex: ($H) RDY

2. #n (gp-id) message

   Ex: #3 (AA) WHAT TIME IS PM?

   (requires operator responses)

INPUT MESSAGES

- must begin with a space and end with a carriage return (C/R) on the command line.

INPUT RESPONSE MESSAGE

1. n text

   n: Ø-9

   text: message_response (≤14Ø char.)

   EX: 3 PM IS AT 17ØØ!

2. text (This is the response for message #Ø)

   Ex: YOUR SCRATCH TAPE IS READY.

NOTE: A numbered output message must have been received prior to the response.

INPUT TASK GROUP MESSAGES

1. message

    EX: RDN
        CWD >UDD>JONES;LWD

NOTE: This form is used with the commands, either operator or user, depending on the operator's default task group.

---

2. gp-id message

    EX: $H RDN

        $S CSD -LIB2 >SYSLIB2

NOTE: This is intended for use with an operator group that is not the default task group.

; = semi-colon separates commands

OUTPUT MESSAGE CONTROL

1. Halt Output

   - Enter one space only with no C/R.

2. Resume Output

   - Enter @ with C/R.

3. Entering input while output is still being displayed do the following steps:

   - Enter 1st character of input
   - Wait until the output stops displaying
   - Enter rest of message

DIRECTIVES TO OIM

1. C

   - Display all unanswered numbered messages.

2. C :qp-id:

   - Changes the operator default task group.

   Ex: C :$H:

   C :$S:

3. C Pnnn

   nnn = 000 - 999 (tenths of a second)

   - Changes the pacing rate of output messages to nnn tenths of a second.

     Ex: C P030 (all output messages will be displayed no less than 3 seconds apart)

BREAK PROCEDURES

1. To break (suspend) a running command in an operator task group:

   C B gp-id

   Ex: sp C B$H

   Rules: 1. Gp-id cannot be $S

   2. Lead task of the group must be the command processor; i.e., the group must be designed to accept user commands.

BREAK PROCEDURES (Cont'd.)

2. RESPONSES TO A BREAK:

SR: resume execution of suspended command

UW: terminate the suspended command

NEW-PROC: terminate all commands and restart the group.

BYE: terminate the group ("logging off")

PI: terminate the current directive (used only when in the LINKER or EDITOR subsystems)

any other: execute the new command, but stay in break mode.

Ex: C B$H

BREAK (response indicating break mode)

UW

TOPIC XVIII

MISCELLANEOUS OPERATIONS

Objectives: Upon completion of this topic, the student will be able to:

1. Initialize a removable disk pack using the Removable Storage Initialization Program (RSIP).

2. Describe configuration requirements for printer operation.

REMOVABLE STORAGE INITIALIZATION PROGRAM (RSIP)

Freestanding utility program that can be used to format and initialize labels on permanent, structured removable and non-structured removable disk packs for MSU0400/0402/450 only.

Dialog

Concurrent execution

Functions

- Checks for vacant spindles
- Checks for device types/status
- Writes pack label
- Validates/formats alternate tracks
- Adds/deletes entries in defective llink directory/defective space history table
- Hard copy provided

RSIP

REMOVABLE STORAGE INITIALIZATION PROGRAM

THE RSIP PROGRAM INITIALIZES REMOVABLE, UNDEDICATED DISK PACKS FOR USE UNDER GCOS. THE FOLLOWING JOB STREAM CAN BE USED TO CALL RSIP INTO EXECUTION.

```
$ SNUMB
$ IDENT
$ USERID
$ OBJECT  ──┐
    .       │
    .       ├──> RSIP OBJECT DECK
    .       │
$ DKEND   ──┘
$ EXECUTE
$ PRIVITY
$ DATA     I*─┐
    .         │   OPTIONAL DEFECTIVE SPACE
    .         ├──> DATA CARDS
    .         │
$ SYSOUT   C*─┘
$ ENDJOB
***EOF
```

DISK STRUCTURE

A STRUCTURED DISK PACK HAS THE FOLLOWING FORMAT:

SECTOR #	CONTENT
Ø	DISK PACK LABEL
1	DEFECTIVE LLINK DIRECTORY
2	RECOVERY TABLE (ST1 ONLY)
3	ALTERNATE TRACK TABLE
4	DEFECTIVE SPACE HISTORY TABLE
5-n	AVAILABLE SPACE TABLE

A NON-STRUCTURED PACK WILL HAVE THE DISK PACK LABEL AND THE ALTERNATE TRACK TABLE.

The following is a quick reference list identifying RSIP questions and valid responses.

Note that most messages are displayed in two parts, comprising a message prefix identifying where the problem occurred, and the message itself. Only the messages are listed. However, they are grouped alphabetically according to the message type or prefix:

Type	Prefix
1	(None) Message is free standing.
2	S#ssss DP iccc-dd
3	S#ssss DP iccc-dd STATUS ERROR WAS xxxxxxxxxxxx SA = yyyyyyyyyyyy

where:

ssss	- SNUMB
i	- input/output controller port number (Ø-7)
ccc	- input/output controller channel number (8-31 for an IOM, Ø-127 for an IMX or IOX, 8-63 for an IMU or an IOP)
dd	- Device identifier
xx...x	- Status error code
yy...y	- Seek address of error

Note also that, unless specified otherwise, entering EOM (end of message) is identical to a NO response.

RSIP Messages And Responses

Type	Message	Response/Result
1	ENTER DEVICE IDENT (iccc-dd)	iccc-dd
1	INVALID DEVICE IDENT	reissues "ENTER DEVICE IDENT" message
1	DEVICE IS ALREADY ASSIGNED, WAIT?	EOM/Y
2	S#sssss DP iccc-dd	Message prefix for following messages
2	ANY ATT DATA?	D,O,A,L,Y images/EOM
2	CLEAR ALTERNATE TRACK TABLE?	EOM/Y
2	CLEAR DEFECTIVE LLINK DIRECTORY TABLE?	EOM/Y
2	CLEAR DEFECTIVE SPACE HISTORY TABLE?	EOM/Y
2	DEFECTIVE PACK-TOO MANY DEFECTIVE TRACKS ARE IN CATALOG. UNABLE TO UPDATE OR DELETE LLINK DIRECTORY TABLE	Refer to messag description following end c table
2	ENTER DEFECTIVE SPACE DATA	D,O.A,L,Y images/EOM
2	ENTER DELETE LLINK DATA	D,O,A,L,Y images/EOM
2	FORMAT?	EOM/Y
2	HARDCOPY?	EOM/Y
2	HEADER VERIFICATION FAILURE INDICATES FORMATTING REQUIRED TO CONTINUE, CONTINUE?	EOM/Y
2	IF DEVICE NAME NOT "nnn" ENTER NEW DEVICE NAME	xxx/EOM
2	IF LLINKS/AU SIZE NOT "nnn" ENTER NEW LLINKS/AU SIZE	mmm/EOM
2	IF PACK # NOT "ppppp" ENTER DEVICE PACK #	ppppp/nnnnn/EOI
2	IF PACK NAME NOT "xxxxxxxxxxxx" ENTER NEW PACK NAME	name/EOM

Type	Message	Response/Result
2	IF PACK SEQ. # NOT "nnnnn" ENTER NEW PACK SEQ. #	nnnnn/EOM
2	IF PACK TYPE NOT "ttttt" ENTER NEW PACK TYPE	NSTRUCT/STRUCT/EOM
2	IF RETEN. PERIOD NOT "99999" ENTER NEW RETN. PERIOD	Site-determined NNNNNN/EOM
2	INITIALIZE?	EOM/T
2	INVALID DATA	D,O,A,L,Y images/EOM
2	IS LABEL INFORMATION BAD?	EOM/Y/LONG
2	LABEL INFORMATION	information only
2	NAME OF DEVICE TYPE	information only
2	NO ALTERNATE TRACK TABLE	information only
2	NO DEF. LLINK DIRECTORY	information only
2	POWER OFF ON CHANNEL, CONTINUE?	EOM/Y
2	RELEASED, WANT IT ASSIGNED?	EOM/Y
2	SIMULATE NSTRUC PACK?	EOM/Y
2	STARTING LLINK # NUMBER OF LLINKS	Refer to message description following end of table
2	STILL PLAN TO CHANGE SWITCH?	EOM/Y
2	STILL PLAN TO MOUNT NEW PACK?	EOM/Y
2	STILL PLAN TO POWER UP CHANNEL?	EOM/Y
2	TEST TRACKS?	EOM/Y
2	UNABLE TO BUILD AST IMAGE/ETC. SPACE-xxxxxx MUST INITIALIZE ON SYSTEM STARTUP?	EOM/Y
2	UNABLE TO ERASE LLINK DIRECTORY TABLE, CONTIUNE?	EOM/Y
2	VACANT, WANT A NEW PACK?	EOM/Y
2	VERIFY TRACK HEADER?	EOM/Y
2	WILL PACK BE USED ON NPS SHARED UNIT?	EOM/Y

Type	Message	Response/Resul
2	WRITE INHIBITED, CHANGE SWITCH?	EOM/Y
2	WRONG DATA RECEIVED WHILE VERIFYING DEF. TRACK FORMAT, CONTINUE?	EOM/Y
2	WRONG DATA RECEIVED WHILE WRITING DEF. TRACK FORMAT, CONTINUE?	EOM/Y
3	S#sssss DP icce-dd STATUS ERROR WAS xxxxxxxxxxxx SA=yyyyyyyyyyyy	Message prefix following mess
3	EOF WHILE VERIFYING, MUST FORMAT TO CONTINUE CONTINUE?	EOM/Y
3	WHILE FORMATTING, CONTINUE?	EOM/Y
3	WHILE FORMATTING DEFECTIVE TRACKS, CONTINUE?	EOM/Y
3	WHILE READING ATT, CONTINUE?	EOM/Y
3	WHILE READING DEF. LLINK, CONTINUE?	EOM/Y
3	WHILE READING DEF. HISTORY, CONTINUE?	EOM/Y
3	WILE READING LABEL, CONTINUE?	EOM/Y
3	WHILE TESTING, CONTINUE?	EOM/Y
3	WHILE VERIFYING, CONTINUE?	EOM/Y
3	WHILE WRITING ATT, CONTIUNE?	EOM/Y
3	WHILE WRITING DEF. LLINK, CONTINUE?	EOM/Y
3	WHILE WRITING DEF. HISTORY, CONTINUE?	EOM/Y
3	WHILE WRITING IN AST IMAGE, CONTINUE?	EOM/Y
3	WHILE WRITING DEVICE AST IMAGE, CONTINUE?	EOM/Y
3	WHILE WRITING LABEL, CONTINUE?	EOM/Y
3	WHILE WRITING RCV/DISK SCF SPACE, CONTINUE?	EOM/Y

RSIP SAMPLE DIALOGUE

```
???spawn rsip

    *S#RSIP  ASKS PRIVITY,  ID =OPNSUTIL       ..GRANT?

???grant rsip

              *SRT   RSIP -01   @ 9.976   .MRSIP  (500)

S# RSIP  DP 0-08-05 INIT? (EOM=N) yes

S# RSIP  DP 0-08-05 IS LABEL INFO BAD? (EOM=N)
H-6000GE PHXdnnnn  DISC*PACK  NSTRUCT000000mmddyy000000000001 yes

S# RSIP  DP 0-08-05 IF PACK # NOT 00000  ENTER NEW # dnnnn

S# RSIP  DP 0-08-05 IF NAME NOT  DISC*PACK  ENTER NEW NAME

S# RSIP  DP 0-08-05 IF PACK TYPE NOT NSTRUC ENTER NEW TYPE struct

S# RSIP  DP 0-08-05 IS LABEL INFO BAD? (EOM=N)
H-6000GE PHXdnnnn  DISC*PACK  STRUCT000000mmddyy000000000001

S# RSIP  DP 0-08-05 LLINKS PER ALLOCATION UNIT? 1

S# RSIP  DP 0-08-05 FORMAT? (EOM=N) yes  (Takes appx. 15 min.)

S# RSIP  DP 0-08-05 SIMULATE NSTRUC PACK? (EOM=N)

S# RSIP  DP 0-08-05 REPLACE ALTERNATE TRACK TABLE? (EOM=N)

S# RSIP  DP 0-08-05 CLEAR DEF. LLINK DIRECTORY? (EOM=N) yes

S# RSIP  DP 0-08-05 CLEAR DEF. SPACE HISTORY TABLE? (EOM=N) yes

S# RSIP  DP 0-08-05 DEF. SPACE DATA?(EOM=N)

S# RSIP  DP 0-08-05 DELETE LLINK?(EOM=N)

S# RSIP  DP 0-08-05 TEST? (EOM=N) yes  (Takes appx. 20 min.)

S# RSIP  DP 0-08-05 VERIFY? (EOM-N) yes  (Takes appx. 10 min)

S# RSIP  DP 0-08-05 IF DEVICE NAME NOT ST4 ENTER NEW NAME rd5

S# RSIP  DP 0-08-05 WILL NPS DATA BE STORED ON THIS PACK?  (EOM=NO)

S# RSIP  DP 0-08-05 HARDCOPY? (EOM=N) yes

S# RSIP  DP 0-08-05 ENTER COMMENT? (EOM=N) none
```

```
S# RSIP  DP Ø-Ø8-Ø5 iNIT? (EOM=N) skip
S# RSIP  ALL CHECKED, DO YOU WISH TO INITIALIZE A NEW PACK? (EOM=N)
              *EOJ  RSIP -Ø1  @1Ø.529
```

PRINTERS

Device	Printer Type	Printer Capabilities	Characters Per Line	VFC/ VFU_{NIT}	Print Speed (LPM)
PRU1100	Drum	BCD	132	VFU	1100
PRU1200	Belt	ASCII, BCD	136, 160	VFC	1200
PRU1600	Belt	ASCII, BCD	136, 160	VFC	1600
PRU0901	Belt	ASCII, BCD	136	VFC	900
PRU1201	Belt	ASCII, BCD	136	VFC	1200
PRU0903	Belt	ASCII, BCD	136	VFC	900
PRU1203	Belt	ASCII, BCD	136	VFC	1200
PRU0908	Belt	ASCII, BCD	136	VFC	900
PRU1208	Belt	ASCII, BCD	136	VFC	1200

PRINTERS (Cont'd.)

STARTUP EXAMPLE

A SITE HAS TWO BELT PRINTERS CONFIGURED, ONE USING A STANDARD BCD PRINT TRAIN, THE OTHER USING A SITE UNIQUE ASCII PRINT TRAIN AND VFC. THE FOLLOWING EXAMPLE SHOWS THE AFFECTED CARDS IN THE SITE'S STARTUP RUN STREAM.

```
$ CONFIG

$         INFO    ASCII
$         IOM-Ø   PUB-3Ø,PR12ØØ,UNITS-1,UNIT-1,
$         ETC     TRAIN-113Ø,136,PR1

$         IOM-1   PUB-28,PR16ØØ,UNITS-1,UNIT-1
$         ETC     TRAIN-764,16Ø,PR2

$         TRAINS 4Ø1/764/GCOS,
$         ETC     LONG,4Ø2/113Ø,ASCII4

$EDIT

$         FILDEF  DS1,PRINTIMAGE,3
```

LINKS

PRINTERS (Cont'd.)

PTRAIN

CHANGING PRINT TRAINS IS A RELATIVELY SIMPLE PROCEDURE. THE OPERATOR CAN DIRECT LOADING OF THE CORRECT BELT IMAGE THROUGH THE USE OF THE PTRAIN CONSOLE VERB. THIS VERB IS USED TO INFORM THE OPERATING SYSTEM OF THE NEW PRINT TRAIN SO THE PRINTER'S BUFFER CAN BE FILLED WITH THE APPROPRIATE IMAGES. THE FORMAT OF THIS VERB IS:

```
PTRAIN    ICCDD    nnnn
      or
PTRAIN    ICCDD    xxxx
```

WHERE: ICCDD = MASS STORAGE DEVICE ON WHICH BELT IMAGE FILE RESIDES.
nnnnn = NAME OF BELT IMAGE FILE
xxxx = 4 DIGIT (OCTAL) BELT IMAGE FILE IDENTIFIER (IF THE 4-DIGIT IDENTIFIER IS USED TO DEFINE THE FILE, THE FIRST DIGIT MUST BE Ø OR 1 AND THE VALUE CANNOT EXCEED 1777)

THE NAME OR 4-DIGIT OCTAL IDENTIFIER MUST AGREE WITH THE INFORMATION ON THE TRAINS CARD AT STARTUP. THE APPROPRIATE IMAGES MUST RESIDE ON THE PRINTIMAGE FILE FROM STARTUP (IF STANDARD 1130,1,2,764) OR THE TRAIN/VFC IMAGE MAINTENANCE (TVIM) PROGRAM.

APPENDIX A

SAVE AND RESTORE

SAVE AND RESTORE FUNCTIONS - OVERVIEW

The save function copies permanent cataloged files from mass storage device(s) to offline storage on magnetic tape. The restore function copies saved cataloged files from magnetic tape to mass storage device(s). Note that the restore operation provides the version of the file at the time of the save; therefore, the file is generally out-of-date at the time a recovery operation is performed.

Save and restores can be exercised by either the site/system administrator or the user to save and restore files and catalogs. Depending on the objectives desired, a variety of save-and-restore combinations and time intervals can be employed. For example, if the installation is attempting to reduce mass storage fragmentation, the save-and-restore sequence can be performed on a scheduled basis. If the installation is using these functions to transport files to another installation for processing on an alternate system, the save-restore sequence can be performed as needed.

There are two levels for each save and restore function:

- master saves and master restores
- user saves and user restores

The remainder of this section discusses each level in detail. A further description of the FILSYS directives used to perform these functions will be covered later in this appendix.

Master Save And Restore Functions

Saves and restores performed by the site/system administrator are called master saves and master restores.

A master save function provides backup files and catalogs and serves as a base for maintenance and utility functions. The master save function is initiated by a SAVEMAST directive within a $ FILSYS activity. The SAVEMAST directive defines the type of save to be performed. Each SAVEMAST directive, regardless of the number and type of save options specified, generates one related set of save tapes.

NOTE: A total save of the installation data base should be performed periodically (e.g., weekly) as a preventive measure against loss of the data base.

Similarly, the master restore function is initiated by a RESTOREMAST privileged directive with a $ FILSYS activity. The RESTOREMAST directive defines the type of restore to be performed. Depending on the options included in the RESTOREMAST directive, the restore function writes all or selected subsets of the saved catalogs (except in the case of a device restore) and files from the save tapes to the appropriate mass storage catalogs and files.

Master saves and restores can be used in the following ways:

- Master save and restore functions can be used to reduce fragmentation of space on mass storage devices by compacting catalog structures, file content, and mass storage allocation tables into contiguous locations.

- The master save function can be used to facilitate the transfer of infrequently used mass storage files or magnetic tape. (The master restore function then can be used to write the files from magnetic tape to mass storage when they are required for processing.)

  The master save function can also be used to transport files and catalogs to another system for processing. (The restore function is then employed to copy files and catalogs from the save tapes to mass storage at the alternate installation.)

- The master restore function can be used to reinstate mass storage files and catalogs from save tapes, if part or all of the data base is destroyed.

The proper scheduling of save functions also provides backup for files and catalogs, thereby helping preserve the integrity of the installation's data base.

Master saves or restores apply to both permanent disk and removable structured disk packs. Saving and restoring is quite similar on the two device types, which are described separately later in this appendix.

User Save And Restore Functions

A master save or restore may encompass multiple files and catalogs for one or more user identifications. However, a user save and restore can be restricted to an individual file or to a single user identification. User saves and restores are initiated by the SAVE and RESTORE FILSYS directives, respectively. Unlike master saves and restores, user saves and restores do not require privileged FILSYS directives.

Tape Files For Saves And Restores

A tape file to be used for a save function (and, subsequently, in a restore function) is defined by a $ TAPE JCL statement, which must be included in a $ FILSYS activity.

File code PS must be included on the $ TAPE statement to specify the save tapes to be used. If this statement is not included in the activity or is out of sequence in the job stream, the message

NO PRIMARY SAVE DEVICE FURNISHED

is printed on the save report (see "Output Reports From Save Processing" later in this section).

Save tapes created during the save function must be submitted as related sets during the restore function. Note that the $ TAPE statement identifying the save must specify file code PR in the restore function.

SAVE TAPE FORMAT

The save tape is composed of the following elements in the sequence indicated:

1. Task block - The task block is the first record on the save tape and contains the save options specified in the directive. This record is used by the restore function for analysis and verification.

2. SMC record - This record follows the task block and contains, for every master save, the SMCs from device ST1 specified to be saved. System Master Catalogs are not saved from other devices.

3. Catalogs - SMCs are followed on the tape by the user catalogs specified to be saved, for every master and user save. Catalogs are saved only from device ST1.

4. File content - This record contains, for every master and user save, the content of all the user files specified to be saved.

DUPLICATE SAVE TAPES

Duplicate save tapes can be created in case a faulty magnetic tape is encountered during the restore function. The duplicate save tape is defined in the $ FILSYS activity by specifying file code XS on a separate $ TAPE JCL statement.

Hash Contention Among Contesting Jobs

During a save or restore function, System Master Catalog (SMC) classes are locked and unlocked by FMS, as required. When a job updates catalog structures in a specific SMC class, FMS locks that class to prevent access by any other job(s). When updating is successfully completed, the class is unlocked and made available to the next job that requires access.

Locking of SMC classes can create processing delays during concurrent save or restore functions when two or more jobs attempt to simultaneously access user identification within the same class. (The first job to gain access to a user identification locks the entire class. Therefore, other jobs seeking access to user identifications within that class are delayed from executing.) This conflict is referred to as hash contention.

Hash contention causes the jobs to execute serially as a series of single jobs. As a result, the multiprogramming advantages offered by concurrent processing are negated to a great degree.

Hash contention can also result when a save or restore operation contends with other jobs (either batch or Time Sharing) for the same SMC class. This is especially true in the case of a restore operation. During save operations the effect is not as great, because the hash is not shut for extended periods of time.

During a restore operation, the substructure is restored first, then the content is restored. The hashing (assignment of entries to classes) is shut while the substructure restore function is process, but it is frequently open during the content restore function. As a result, contention between the restore operation and other jobs is reduced, and system throughput is increased during content restoration.

Device Contention

Contention can also occur during:

1. a save or restore function when the save or restore tries to access the same device as other jobs executing in the system

2. a restore function when requests are made for mass storage allocation modules.

This form of contention is referred to as device contention and, like hash contention, also affects concurrent saves and restores.

Serial And Concurrent Save And Restore Processing

Multiple saves or restores can be performed as a series of jobs run serially (i.e., tandem) or concurrently. The advantages offered by serial and concurrent processing apply equally to saves and restores (refer to "Full Restores" later in this appendix).

Serial saving and restoring occurs when each save or restore job is executed separately. Concurrent saving and restoring occurs when two or more save and restore jobs are executed simultaneously.

Concurrent saving and restoring takes full advantage of the multiprogramming feature of GCOS 8 software. This approach not only reduces the total amount of processor time required to execute one or more save or restore jobs serially, but also uses the processor more efficiently by reducing the amount of time the processor is idle during I/O operations.

Only one SAVEMAST or RESTOREMAST directive need be specified in each job for concurrent saves and restores.

Effective concurrency is contingent on the degree of prevailing hash contention and device contention.

To prevent hash contention, each directive must specify a different subset of the installation's file system with no overlap in hashes. Also, SMC classes in a series of concurrent save and restore functions must not be duplicated when using the "RANGE" option. For example: ranges Ø-6, 7-14, 15-22, and 23-27 do not produce hash contention because the classes are not duplicated. However, ranges Ø-6, 4-14, 15-22 and 23-31 will produce hash contention because classes 4, 5, and 6 are duplicated.

To prevent device contention, each SAVEMAST directive must specify a different subset of the installation's permanent devices with no duplication of device names. Also, device names in a series of concurrent device saves must not be duplicated when using the "DEVICE" option. For example: the subsets /ST1,ST2/, /ST3,ST4/, and /ST5,ST6/ do not produce device contention because the device names are not duplicated. However, the subsets /ST1,ST2,ST3/, /ST3/ST4,ST5/, and /ST5,ST6/ will produce device contention because the device names ST3 and ST5 are duplicated.

NOTE: The DEVICE option on the RESTOREMAST directive is not intended to perform a total restore by a succession of concurrent restores. See "Master Restore On Permanent Devices" later in this appendix.

Avoidance of duplicate classes does not eliminate device contention, and avoidance of duplicate device names does not eliminate hash contention. However, both hash and device contention can be eliminated between concurrent saves or restores.

If all files of all user identifications of an exclusive range of FMS hashes are placed on a subset of devices, which does not contain any files from a different range of hashes, and this step is performed for all ranges of hashes in the system, no contention occurs when concurrent RANGE saves or restores, or concurrent device saves are executed. This type of file placement is done by using the "RESET" and "RENAME" options on the RESTOREMAST directive. No options need be specified on the RESTOREMAST directive if a complete restore of what was saved is required. If options are specified, these must apply to a subset of the save data. Whether options are used or not, the degree of concurrency in the restores is the same as that obtained in the saves from which the restores were made.

MASTER SAVE PROCESSING ON PERMANENT DEVICES

Master saves apply to permanent disk packs, volume sets, and removable structured disk packs. Saving is quite similar on the device types, which are described separately.

Because the save function applies to permanent files, it is commonly referred to as a "perm save". Save functions fall into three categories: partial saves, full saves, and total saves. Each save type can be initiated by a SAVEMAST privileged directive.

- A partial save copies only those files that were updated or created during a specific time from mass storage to save tapes. Partial saves, as the name implies, are interim functions to total saves. (See "Partial Saves - Since And Incremental" below.)

- A full save copies all files for a specified subset of a data base from mass storage to the save tape. The subset can be user identification, class, or mass storage devices. A full save can serve as an alternative to either a partial or total save (see "Full Saves On Permanent Devices" later in this section).

- A total save copies all files for all users from all permanent mass storage devices to the save tape. A total save provides a basis for the next series of partial saves and normally is performed less frequently than partial saves. The term "total save" usually refers to one job saving all permanent cataloged files on a set of related magnetic tapes. However, under certain circumstances, this term could refer to multiple full and partial saves as those achieved by a total save. An entire catalog and file structure can be saved by a series of related full and partial saves, when each full and partial save copies a portion of the structure that is not copied by any other full or partial save. An example of this is the results that can be achieved by the RANGE option on the SAVEMAST directive. By specifying a series of ranges (i.e., hashes), all files for all user identifications can be copied to the save tape (e.g., specify ranges Ø-6, 7-15, 16-25, and 26-31).

  Unless otherwise stated, total save discussed in this text refers to either of the preceding definitions, that is, a single job or multiple saves (see "Total Saves On Permanent Devices" later in this section.

On an ST1 device save, only: all SMCs, catalogs, and file content to be saved for the specified user identifications are saved for each partial, full, and total save.

Partial Saves - Since Incremental

Partial saves are subordinate to a total save. A series of partial saves usually is preceded and followed by a total save. Partial saves often are coordinated between total saves to provide a set of backup tapes containing current versions of files that were updated subsequent to the last total save.

Restore time can be affected by the options specified on the SAVEMAST directive for partial and total saves. Less time is consumed if the same options are used for both the partial and total saves.

Site personnel can establish a pattern for performing the save sequence. Among the factors to be considered are (1) the volume of changes to be allowed between saves; (2) the criticality of the user's data; (3) the degree of security sought; and (4) the amount of overhead allowed with respect to the time required and the number of magnetic tape reels involved when performing save functions. For example, some sites may wish to perform partial saves on a daily basis and total saves on a weekly basis. Other sites may find it desirable to perform multiple partial saves throughout the day and to perform one total save during a period when no file updating is permitted.

When using partial saves, it is of primary importance to carefully manage the resulting save tapes and listings to that the most current versions are available when a restore function is required. It is quite time consuming to track files through the listing to determine which save tape contains the appropriate files.

Partial saves are divided into two categories: since saves and incremental saves. Each of these categories provides an alternative to total saves and full saves, as described below.

SINCE (PARTIAL) SAVES

Since saves are specified by the SINCE/date,time/ option on the SAVEMAST directive. This option permits selective file saves. When a since save is performed, only the following files are copied to the save tape:

- files updated during the specified save period
- files created during the specified save period
- files restored since the last total SAVEMAST (even if before the specified save period), unless RESET/RFILES/ was used at restore time or in an intervening "since" SAVEMAST.

Since saves are particularly effective in providing current versions of files in the event an unplanned restore function is required (e.g., when file restoration is the result of a malfunction rather than as the result of a site-initiated mass storage maintenance procedure). Files copied to the save tape as the result of since saves are more current than those copied as the result of a total save or a full save that preceded the since saves.

Unless the "BUSY" option is used in the save function, any files that are busy when a since save is performed are not saved. Each busy file is identified by file name on the save report (the letter B is printed following the file name to indicate that the file was busy). A busy file subsequently can be saved by another since save (provided the file is not busy at that time).

The date and time fields can be used to achieve the following results:

- Date And Time Field Constant

  If the date and time fields are constant from one since save to another, it is recommended that the beginning of each since save period be the date and time the most recent total or full save job was begun.

  This approach results in redundant saving. All files that were restored, updated, and created during the save period (i.e., during the period between the most recent total save and the current since save) are copied to the save tapes generated by each since save. However, while redundant saving requires additional time during the save functions, it can save time during a subsequent restore function. Only the save tapes from the most recent since save and from the most recent full or total save are required as input to the restore function. All other save tapes can be disregarded.

- Date And/Or Time Field Change

  By changing the date and/or time fields, the since save period can be reduced. When doing so, it is recommended that the starting point of each since save be the date and time the previous since save job was begun.

Additionally, the RESET/RFILES/ option can be included on a SAVEMAST...SINCE directive to eliminate redundant saving in all subsequent since saves. Files that were restored during the since period that is specified on the SAVEMAST...SINCE directive are saved for that period. When the RESET/RFILES/ option is specified, the files are not saved during the next save period if they were restored during the preceding period. (RESET/RFILES/ has no effect on files that were updated or created during the period.)

If the RESET/RFILES/ option is not included on the SAVEMAST... SINCE directive, all files that were restored during each save period since the total restore are copied to the save tapes with each since save.

Figure A-1 compares the amount of redundant saving that can be avoided by using the RESET/RFILES/ option, with the amount of redundant saving that results if the option is not used. The arrows between identifiers represent the period over which restored files are saved.

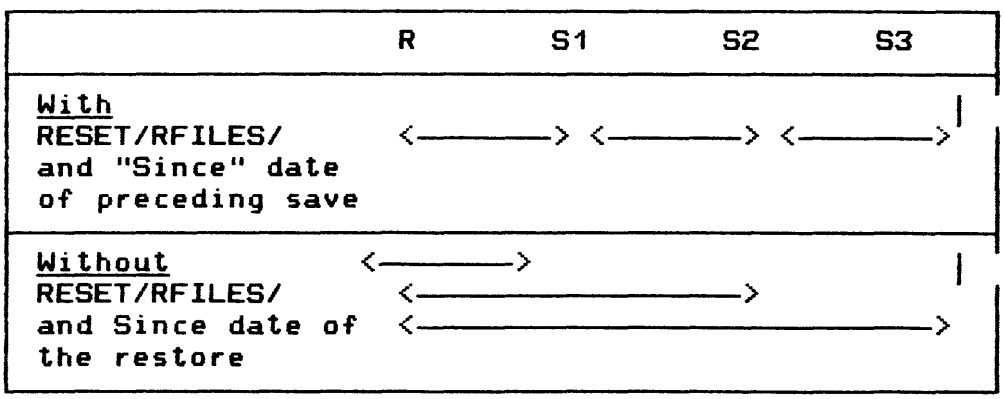

where:

R - Total restore

S1 - First since save following total restore; when used, RESET/RFILES/ option specified on this directive

S2 - Second since save following total restore

S3 - Third since save following total restore

Figure A-1. Effect Of RESET/RFILES/ Option

By using the RESET/RFILES/ option, less time is required to complete the subsequent save functions. If a restore is performed subsequently, the output (i.e., save tapes) from each since save and from the most recent total save are required as input (in reverse chronological order).

The use of the RESET/RFILES option should be governed by the following rules:

- To avoid redundant saving of files, use this option when the date and/or time fields change. Once is enough to save restored files, because all "since" saves are required as input in a subsequent restore.

- Do not use this option when the date and time fields are constant; in this case, only the latest "since" save, plus a full or total save, is required as input in a subsequent restore.

INCREMENTAL (PARTIAL) SAVES

Incremental saves are specified by the "INCR" option on the SAVEMAST directive and, like since saves, are based on a period of time. This option allows site techniques personnel to execute a save job at any time (e.g., every few hours, daily or every few days). All files that were updated, created, and restored since the last save function, including any type of save, are copied to the save tape.

An incremental save is similar to a since save when the date and time specified are that of the last save. However, an incremental save does vary in other respects, as shown:

- The user can inhibit incremental saves of specific files. Unless overridden by the user, all permanent cataloged files are subject to incremental saves when the "INCR" option is specified on the SAVEMAST directive. To exclude an individual file from the save function, the user can specify the INCRTSAVE/NO/ option on the FCREAT directive when the file is created or on the FMOD directive when the file is modified. The INCRSAVE/NO/ option has no effect on since saves.

- Because the starting point of the save period can be a variety of save types (e.g., a since save, a device save, or a range save), the results of two successive incremental saves may not have continuity. For example, if there are several other kinds of saves performed between two incremental saves, there may be little relationship between the results of the incremental saves. Conversely, since saves provide sequential, related results.

- When an incremental save aborts, the "INCR" option should not be used to rerun the save, because the files that were saved in the aborted save cannot be saved again. If used, only those files not saved before the abort will be saved.

Full Saves On Permanent Devices

A full save preserves a subset of the system user identification residing on permanent devices. There are three categories of full saves:

- range saves
- don't-do or do-only saves
- device saves.

By executing a series of full saves, it is possible to obtain a total save of the system user identification, which is the sum of the full saves of the subsets of system user identifications. Each additional full save that is executed concurrently with other full saves reduces the time required to perform the overall save function.

As with other types of concurrent saves, the full save reduces total amount of processor time required to perform the save function. Also, the processor is utilized more efficiently because the amount of time it is idle during I/O operations is reduced.

A subsequent total restore requires a set of restores, each having a full save as input. The input to the restore function can also be a partial save and a full save. In this instance, if the partial save applies to all user identifications in the system, the restore directive options must specify the subset of user identifications that were saved in the full save. Another method is to execute a set of partial saves, each specifying a subset of user identifications that correspond to a subset in a full save. In this instance, no options need be specified in the restore function.

When full saves and partial saves are used as input to a restore function, the subset restored must be the same for the full save and for the partial save.

RANGE (FULL) SAVES

Range saves offer more versatility than any other type of full save. A range save is specified by the RANGE/m,n/ option on the SAVEMAST directive (where m is the number (Ø-31) of the SMC class at which the save function is to begin and n is the number of the class at which the save is to end). A range can define from 1-32 classes. All SMC entries, catalog structure, and file content for all user identifications within the specified classes are copied to the save tape.

Range saves can be performed sequentially or concurrently. By specifying two or more ranges on the same SAVEMAST directive (e.g., SAVEMAST...RANGE/2,5/,RANGE/1Ø,13/), the save is performed sequentially. Concurrent saves require that each range be specified in a separate job. For example, the directives SAVEMAST...RANGE/2,5/ and SAVEMAST...RANGE/1Ø,13/ should be included in separate jobs to initiate simultaneous copying of files within SMC classes 2-5 and 1Ø-13.

When performing concurrent range saves, it is recommended that approximately the same amount of data is saved by each job. An even distribution of data across these jobs reduces the amount of overall time required to complete the full save.

Using the information from the reports generated by a MASLST directive, it is possible to determine a division of classes that yields approximately the same amount of data from each range. Note, that each range will not necessarily comprise an equal number of classes. For example, ranges Ø-9, 1Ø-14, and 15-31 could constitute an equal division of the total data to be saved.

Erroneously specifying the same class in more than one job nullifies the advantages gained from concurrent saves. This results in the concurrent saves being run as sequential saves, which require as much processor time, more main memory, and more save tapes than a total save.

DON'T-DO AND DO-ONLY (FULL) SAVES

The Don't-Do And Do-Only saves are two types of full saves that can be specified to allow selective exclusion or inclusion of user identifications from or in the save function.

These two types of saves are selected by including the following options in the SAVEMAST FILSYS directive.

- DONTDO/user name,.../
- DOONLY/user name,.../

The DONTDO option identifies the user whose files and catalogs will not be saved by the save function to be performed. This option can be used to reduce the amount of input necessary when a majority of the users are to be included in the save function. For example, if the save function is to include files for 8 of 10 user identifications, the DONTDO option can be used to identify the two users who are to be excluded from the function.

The DOONLY option specifies the user identification whose files are to be included in the save function. This option is often used when the save function is to encompass only a few users. For example, if the save function is to include files and catalogs for only 2 of 10 user identifications, the DOONLY option can be used to identify those two users.

NOTE: The DONTDO and DOONLY options are not intended for use as full saves or total saves. Such use of these options is time consuming. (For example, hash contention can result if a DOONLY restore is being performed from different save tapes. Also, serial processing often results.) Therefore, it is recommended that these two options be used with discretion to exclude or to include specific user identifications in the save process.

DEVICE SAVES FOR TOTAL RESTORE

The output from device saves can be used as input to a total restore without significantly affecting the time required to complete the restore (i.e., if the files for user identifications are organized by subset of devices). Otherwise, selective restores from device saves will take considerable time, because files for specific user identifications usually are spread across most devices, and a restore function must be executed from every device save in order to restore the files.

In addition, if device saves are not organized as described under "Total Saves On Permanent Devices" below, they are subject to hash contention, which slows the save process. Nevertheless, device saves can significantly reduce the time required to restore files when properly used in association with device restores.

Device saves are specified by the DEVICE/device name/ option on the SAVEMAST directive. As indicated, this type of save can be used as an alternative to other types of full saves or as a form of total save.

A device save and subsequent device restore can be quite effective when a mass storage device malfunctions. The following procedure can be used to save and restore the content of the malfunctioning device.

1. Perform a device save immediately following the malfunction, if possible.

2. Initialize the malfunctioning device.

3. If the device save was successful, perform a device restore. If the device save was not successful, restore files to the device using save data from the most recent full saves (e.g., if six range saves were performed, six device restores must be run using data from each save).

A series of device saves encompassing all configured mass storage devices can be run as an alternative to a total save. For example, if the system configuration includes nine disk drives, a series of three saves, each identifying three different devices, will yield results comparable to those of a total save. This is inefficient because the same results are generated by a total save using an option-free SAVEMAST directive or by a range save that identifies all 32 SMC classes.

The format of the save tape generated by a device save can differ from that of other types of saves. If ST1 is not among the devices identified on the SAVEMAST directive, only the file content is saved from the identified device(s). However, when ST1 is named on the SAVEMAST directive, all SMC entries, all catalog structures for all user identifications, and file content from ST1 and other specified devices are saved.

If a file spans two or more devices, FMS saves the entire file from all devices on which the file resides, even though only one device may be specified on the SAVEMAST directive. Only one of the devices need be specified to save the entire file, which is referred to as a multi-device file. This device can be the one on which the file begins, ends, or partially resides.

The "ONLY" option can be included on the SAVEMAST...DEVICE directive to restrict the save function to only those devices identified on the directive. This option overrides saving of an entire multidevice file. The "ONLY" option is used to best advantage when a device is used as a full save (as opposed to a total save) to restrict the save function to the content of the named device.

The RDERR/JOURNAL/ and RDERR/DUP/ options on the FCREAT directive have the same effect as the ONLY option on multidevice files (i.e., only that portion of the file residing on the device that is identified on the SAVEMAST directive is saved).

Total Saves On Permanent Devices

In a total save, one job executes until the entire data base (the SMC, the entire catalog structure, and all permanent cataloged files) is copied from mass storage to a single set of save tapes. A total save is specified by a SAVEMAST directive that includes no options requesting either partial or full saves.

Total saves are often the most advantageous type of saves for sites with small mass storage subsystems (i.e., from one to four devices). Under these conditions, a total save is the easiest to control, and results in less confusion when the restore is performed.

The most effective way to perform a total save is to execute concurrent range saves. This technique almost entirely reduces the problem of hash contention.

One of the disadvantages of a total save is the time required, which often necessitates substitution of alternative approaches. As previously indicated, concurrent processing of multiple full saves can yield the same results as a total save, in much less time.

A second disadvantage of a total save is that, if the save job terminates abnormally, the entire job must be rerun.

COMBINATIONS OF SAVE OPTIONS

Combinations of save options can be included on the SAVEMAST directive to provide the installation personnel with additional flexibility. The options can appear in any sequence on the directive.

Save options in combination must be used with caution. Table A-2 and its related notes provide some guidelines for using combinations of save options. Number 1 through 9 in the table correlate with the Notes that follow it.

Table A-2. Combinations Of Save Options

	INCR	DONTDO	DOONLY	RANGE	SINCE	DEVICE
INCR	-	1	1	2	4	1
DONTDO	1	-	3	5	1	6
DOONLY	1	3	-	7	1	8
RANGE	2	5	7	-	2	9
SINCE	4	1	1	2	-	1
DEVICE	1	6	8	9	1	-

Notes For Use Of Save Option Combination Table

1. Though these options are compatible (i.e., they do not result in an error condition), normally they are not used in combination. The INCR or SINCE option usually is intended to generate an all-inclusive save that emcompasses all file-updates, file-create, and file-restore activity during a specific time frame.

2. The INCR or SINCE option frequently is used in combination with the RANGE option. If a series of serial or concurrent range saves encompasses all 32 SMC classes, it is recommended that the save period be the same for each RANGE option. Incompatible save periods may make it difficult to use the resulting save tapes in subsequent restore functions.

3. These options are incompatible. The message "ILLEGAL USE OF OPTION" is written to the save report and the job is aborted.

4. These options do not cause an error condition. They are not intended to be used in combination, but instead as alternatives to each other.

5. These options are compatible only if the user identifications defined with the DONTDO option are within the SMC classes idenfified with the RANGE option. If the user identifications are outside the specified range, the DONTDO option has no effect. For example, if RANGE/Ø,5/ is specified and the user identifications to be excluded from the save function are in classes 12-14, files for all user identifications within classes Ø-5 are saved.

6. If the DEVICE option is used as a full save (i.e., all configured devices are specified on the SAVEMAST directives), DONTDO option can be used to exclude specific user identifications from the save function. However, the DONTDO option must be included on each directive specifying the DEVICE option for the exclusion to be effective.

   If the DEVICE option is not included on all directives, portions of files for that user identification are saved:

   a. if the files span more than one device, and

   b. if the files reside on a device for which the DONTDO option was excluded.

7. If the DOONLY and RANGE options are used in combination, the RANGE option has no effect. Only user identifications specified with the DOONLY option are saved.

8. If the DOONLY option is included with the DEVICE option, only files residing on the named device(s) are saved for user identifications specified with the DOONLY option.

9. Only files for user identifications within the specified range are saved from the specified device (as well as from nonspecified devices if the files span multiple devices).

More than two options can be used in combination for a single save function. However, the circumstances requiring more than two options are much less frequent than those requiring only two options. The preceding table notes can help identify permissible combinations. For example, the RANGE, SINCE, and DEVICE options can be used in combination to save files for users within a specified range (RANGE), that reside on a specific device (DEVICE), and that had file activity during a specific time period (SINCE).

RERUNNING SAVE JOBS

Though system failure or abnormal job termination seldom occurs during a save function, either can require that the entire job/activity be rerun. When either occurs, processing of the job/activity halts. Because there is no means of restarting at the point of interruption, the entire save function must be rerun.

If only one job terminates abnormally during a concurrent save function, only that job must be rerun. All other jobs included in the concurrent save continue to execute to normal termination.

If an incremental save terminates abnormally, the "INCR" option of the SAVEMAST directive must be changed to the "SINCE" option, and must specify the date and time of the previous save before the job is rerun. The save tapes that were produced up to the time the abort occurred can be used in a subsequent restore. To make use of these tapes, the save can be rerun with the "INCR" option to save those files that were not saved before the abort. In a subsequent restore, both sets of tapes should be used as input to the restore.

Output Reports From Save Processing

A listing of the contents of the save tape is printed for each save function (i.e., for each SAVEMAST directive processed) and is referred to as the save report. This listing is printed following the Execution Report. To specifically override printing of the save report, the LISTOPT/NO/ option must be specified on the SAVEMAST directive.

The save reports, as well as all save tapes, should be maintained in a safeguarded area for subsequent restore functions. Information on the save report appears in the following sequence: (1) all SMC entries are listed first; (2) the catalog structure for each user identification in the SMC then is listed in the same sequence as the SMC entries were printed; (3) finally, information for each saved file (e.g., the file name, the device on which the file resides, and the amount of space allocated for the file) is printed for each catalog structure entry.

Whenever a reel of save tape fills and copying of file content switches to another reel, the following message is printed on the save report:

***START REELrrrrrFILE SER.#fffffREEL SEQ.nnnn

where:

rrrrr - reel serial number
fffff - file serial number
nnnnn - reel sequence number

If a JCL statement of the form $ FILE PX,lud,1L is included in a STAK save activity, the contents of the file will be printed at the beginning and end of the save report. For an example of the PX file format, refer to "PX Processing During STAK Save" at the end of this section.

The Execution Report contains definitive information regarding the reel serial, reel sequence, and file serial numbers.

Two methods can be used to process tape during a restore function. The first method includes the use of every tape generated during the save function to restore file and catalog content. The second method reduces processing time by using only those tapes containing files being restored. (This latter method requires use of the save report to determine which tapes contain the needed files.)

1. Identify the hash (i.e., SMC class) in which the user identification for this file resides.

2. Refer to the file content portion of the save report to locate the correct hash and to determine if the correct user identification was included in the save function.

3. Scan the files listed with the user identification to determine if the required file was included in this save function. If the file was included, the required save tape is identified by its reel serial number. If file content resides on more than one tape, the ***START REEL rrrrrFILE SER.#fffffREEL SEQ.nnnnn message is printed immediately preceding the file name to indicate a reel that occurred, and to indicate that the file may begin on the preceding reel.

As each save function is completed, the save report should be reviewed to verify that all files intended to be saved were saved, and those files have no exception statuses. The possible save function exception statuses are "R", "A", and "B".

- "R" status - An attempt was made to save a file that is in restore-lock status; the file is not saved and the letter R is printed following the file name on the save report.

- "A" status - An attempt was made to save a file that is in abort-lock status; the file is saved and the letter A is printed following the file name on the save report. The file is inaccessible until recovery procedures are taken to remove the status.

- "B" status - An attempt was made to save a file that is busy; the file may be partially updated when the save is completed. Each busy file is identified on the save report (the letter B is printed following the file name).

In addition, the save report should be reviewed to determine whether an error occurred during the save function. The report page number on which an error diagnostic is printed is identified at the top of each save report page.

A summary of the error messages can be obtained at the end of the execution report by submitting a $ SYSOUT ER JCL statement with the save activity.

MASTER RESTORE ON PERMANENT DEVICES

The restore function reverses the procedure of the save function by copying System Master Catalog, catalogs, and file content from a save tape to mass storage. Like the save functions, the restore functions fall into three categories: partial, full, and total restores:

- A partial restore copies from the save tapes to mass storage only those files and catalogs that were allocated since the specified date. Partial restores are restricted to use of the SINCE option.

- A full restore copies a specified subset of the data base from the save tapes to mass storage. The subset be user identifications, classes, and mass storage devices.

- A total restore copies all files for all users contained on the save tapes from the tapes to mass storage. For example, use of the same options on the RESTOREMAST directive to restore files as were used on the SAVEMAST directive to save the files is considered a total restore.

  As with the term "total save", two definitions apply to the term total restore. A total restore can refer to one job restoring all permanent cataloged files from a set of related save tapes, or to multiple full restores. An entire catalog and file structure can be restored by a series of full restores when each full restore copies a portion of the structure that is not copied by any other full restore. Unless otherwise stated, total restore refers to either of the preceding definitions. Each of these functions can be initiated by the RESTOREMAST privileged directive.

  NOTE: Only save tapes created by a SAVEMAST directive can be used as input to master restore.

SMCs, Catalog, And File Content Restore Processing

The following describes processing common to all types of restores for System Master Catalogs (SMC), catalogs, and file content.

SMCs are first restored from the save tapes for the specified user identifications - except in device restores, or when restoring from device saves which did not have ST1 specified. If these catalogs exist in the system, they are replaced with those of the save tapes; otherwise, they are created. Duplicate SMCs are created or replaced if SMCDUP is specified during startup.

Catalog structures are restored from the save tapes for the specified user identifications, except in device restores or when restoring from device saves which did not have ST1 specified. The following procedure is observed when restoring catalog structures:

1. The catalog structure (if present) and the subordinate catalogs are first scanned for busy files. If the user identification files are busy during the restore, these files are bypassed and pertinent messages are printed on the execution report. If no busy files are encountered, the catalog structure and the file space are returned to the system.

2. Next, the catalog structure is restored to a device specified as a catalog device during startup. If CATDUP was also specified at Startup, a duplicate structure will be restored on a different catalog device.

3. Once the catalogs for the files are found, they are set restore locked and the restore lock status remains in effect until the file content is restored. Restore locked files will be restored on a different catalog device.

Restoration of file content must always be preceded by restoration of SMCs and catalogs. When SMCs and catalogs have been restored, then all file content can be restored from the save tapes (except in device restore, when duplicate files are used to restore file content). The follow procedure is observed when restoring file content:

1. Unless a device name or a device type was specified when the file was created, file content is restored to the mass storage device containing the most available space. Note that this device may not be the device from which the file was saved. If a file was restricted to a specific device or to a device type when the file was created and the device is not configured at the time file restoration is attempted, corrective action can be taken by specifying (on the RESTOREMAST directive) one of two options to allow the restore: RESET/DEVICE/ or RENAME.

   a. The RESET/DEVICE/ option can be included to remove the device name restriction, thereby permitting restoration of the files to any mass storage device.

   b. The RENAME option can be specified to assign the name of another mass storage device to the files, thereby permitting restoration of the files to that device.

2. When the file content restore is successfully completed, the restore lock is removed and the files become available for immediate use.

   Any file whose content was not restored will remain restore locked. The file catalog is then unusable until the busy indicators are cleared (RESET/BUSY/ is discussed later in the FMOD directive), the system is rebooted or the file is released using a FILSYS activity run with $ PRIVITY.

Restoring From Since And Incremental Saves

Restoring the correct versions of catalogs and files from multiple sets of save tapes that were created by since or incremental saves can be ensured when performing any type of restore function by submitting the sets in a specific order. The order is the reverse chronological sequence and requires processing the most current set of save tapes first and going backwards in sequence until reaching the oldest set of tapes.

Once a file or catalog is restored during a restore function, it is not replaced when a less recent version of the file or catalog is encountered during processing of a subsequent set of tapes.

Restoring Save Tapes

The following procedure is recommended to restore one or more sets of save tapes:

1. Process the most current set of save tapes created by a since or incremental save. Within this set, submit the tapes in reel sequence number order.

2. When the set of save tapes has completed processing, the console message SSSS PREV. SINCE, INCR, OR TOTAL SAVE TAPE #, OR (E)ND is issued (where sssss = SNUMB). One of the following actions may be taken:

   a. If there are additional sets of tapes to process from other since or incremental saves, enter the file serial number of the next most current set of tapes and process those tapes as previously described.

   b. If there are no additional sets of since or incremental save tapes, enter the file serial number of the tapes generated by the most recent total or full save and process those tapes.

   c. If there are no additional sets of save tapes to be processed, enter "E" or END at the console in response to the preceding message.

3. If the date or time option was charged for each since save, all since saves and the total save must be used as input to the restore. The same applies to incremental save. If the date or time remained constant for each since save, only the last since save and the total save need be input to the restore.

Duplicate Save Tape For Restore

A duplicate save tape can be created for use in the event that the original save tape cannot be read during a restore function. When a read problem occurs during a restore function, the following message is issued to the console:

```
sssss***READ TAPE ERROR*** COPY # IS UNKNWN (A)BORT,
(C)ONTINUE, COPY#
```

The console operator should take one of the following alternative actions:

- Enter "A" at the console to abort the activity; the restore job must be rerun.

- Enter "C" to continue the activity. This results in bypassing restoration of the file tht was being restored at the time of the read error. The restore function resumes with the next file. Bypassed files are not restored to mass storage and are left in a restore locked status.

- Enter the file serial number of the duplicate tape (COPY #) to indicate that the duplicate save tape replaces the original save tape. System software then issues the following message to identify the device on which the duplicate save tape is to be mounted:

  ```
  *MNT TAPE S#sssss i-cc-dd REEL#
  ```

  where:

  sssss - SNUMB

  i-cc-dd - IOM number, channel number, and device number, respectively

The Restore program forward-spaces the tape to the location at which the original save tape was positioned when the read error occurred. If FMS is unable to correctly position the duplicate tape, one of the following messages is written to the restore report and the job is aborted:

```
***UNABLE TO POSITION COPY TAPE***  or

***READ ERROR DURING COPY POSITIONING***
```

Partial Restores

Partial restores are restricted to since restores only; the INCR option is not permitted on the RESTOREMAST directive. A since restore is specified by the SINCE/date/ option on the RESTOREMAST directive. Although the SINCE option on the SAVEMAST directive permits a time field as well as a date field, since restores do not include the time field.

The date field can include one of two options (TODAY or a specific date). This field defines the beginning of the restore period. The end of the restore period, which is not specified on the directive, is the date the restore job is begun.

Only files that were created, updated, or allocated during the restore period are written from the save tape to mass storage. Catalogs are restored only if corresponding file content is restored. Since restores provide the opportunity to monitor the demand for files and for using mass storage space more efficiently.

By employing the restore period as an aging technique, infrequently used files are retained on the save tapes, but do not occupy mass storage.

Full Restores

Full restores produce a specific subset of the SMC entries being written from the save tapes to mass storage. Full restores are divided into several categories:

- range restores
- do-only restores
- don't-do restores
- device restores with no device options

By using the various options available on the RESTOREMAST directive, restore subsets can include users within a range (i.e., a hash), or include or exclude specific users in the restore.

Three methods can be used for full restores:

1. Specify the same options on the RESTOREMAST directive that were included on the SAVEMAST directive.
2. Specify different options on the RESTOREMAST directive from those included on the SAVEMAST directive.
3. Use multiple RESTOREMAST directives to produce a total restore.

If the desired options for the restore function are the same as those that were used on the SAVEMAST directive to create the save tapes (1. above), the RESTOREMAST directive need not contain any options. This produces restoration of all data that was saved for the individual subset.

Example: A RESTOREMAST directive with no options can be used to restore information that was saved by a SAVEMAST...RANGE/7,14/ directive.

Options on the RESTOREMAST directive can differ from those on the SAVEMAST directive that was used to create the save tapes (2. above). This results in restoration of a portion of the subset that was saved.

Example: A RESTOREMAST...DOONLY directive specifying several user identifications can be used to selectively restore files and catalogs SAVEMAST...RANGE/7,14/directive.

When save and restore options are not the same, the results of the restore may not be complete. For example, some of the users identified by the RESTOREMAST...DOONLY directive in the preceding example may not reside within SMC classes 7-14. Therefore, files and catalogs for those users will not be restored.

A series of full restore activities, each of which contains a RESTOREMAST directive, can be executed to produce results similar to those of a total restore (noted in 3. above); i.e., using a single RESTOREMAST directive with no options. If the options for the restore function are the same as those used on the SAVEMAST directives to create the save tapes, the RESTOREMAST directives need not contain any options. Compatibility between RESTOREMAST and SAVEMAST options helps ensure a valid restore.

If the options are different or if variations of the SAVEMAST options are used, the results of the restore are unpredictable. For example, if the ranges specified on the RESTOREMAST directive (see below) are different from those on the SAVEMAST directive, some ranges (and all user identifications within those ranges) on one or more save tapes may not be included in the restore function.

The degree of concurrent processing with multiple RESTOREMAST directives depends upon the degree of concurrency that occurred during the save function. For example, if four ranges with no SMC class overlap were used to effect concurrent processing during the save function, the restore function can include four jobs, each containing one RESTOREMAST directive, to achieve similar results.

If hash contention resulted in serial processing (rather than concurrent processing) during the save function, even greater contention may be anticipated during the restore function.

RANGE RESTORES

A range restore is specified by the RANGE/m,n/ option on the RESTOREMAST directive, where "m" is the number (Ø-31) of the SMC class at which the restore function is to begin abd "n" is the number at which the restore is to end. Range restores are more flexible and more efficient than any other type of full restore.

A range can define from 1 to 32 classes. All files and catalogs for all user identifications within the specified classes are copied to mass storage from the save tapes submitted with the restore job.

Save tapes from any type of save function can be used as input to a range restore. However, using save tapes from a device save can be quite time consuming. If a range is spread across several devices, a range restore must be performed for each device saved to obtain a complete range restore.

The most direct form of range restore is one that utilizes the same ranges as those defined on the SAVEMAST directive that was used to create the save tapes. In this case, the ranges do not require definition on the RESTOREMAST directive.

SMC classes also can be selectively restored from within a saved range. For example, if SMC classes 7-15 were saved by a SAVEMAST...RANGE/7,15/ directive, classes 8-11 could be restored from within that range by using the RESTOREMAST...RANGE/8,11/ directive. when selectively restoring SMC classes, it is permissible to specify a class that lies outside the saved range. If, in the preceding excample, the RESTOREMAST directive specified classes 6-8, only classes 7 and 8 would be stored and class 6 would be ignored.

Range restores can be performed as sequential functions or as concurrent functions. By specifying two or more ranges on the same RESTOREMAST directive, the restores are performed sequentially. Concurrent restores require that each range be specified in a separate job. For example, the directives RESTOREMAST...RANGE/2,5/ and RESTOREMAST...RANGE/1Ø,13/ would be included in separate jobs to initiate simultaneous restoration of files within SMC classes 2-5 and 1Ø-13.

When using a series of range restores to accomplish a total restore (i.e., all 32 classes), concurrent restoring is achieved by avoiding class overlap. If concurrency occurred during the save function, the same ranges that were specified on the SAVEMAST directive should be used in the restore function. As previously indicated, no options on the RESTOREMAST directives are required.

DON'T-DO AND DO-ONLY RESTORES

The Don't-Do And Do-Only restores are two types of restores that can be specified to allow selective exclusion or inclusion of user identifications from or in the restore function.

These two restore types are selected by including the following options in the RESTOREMAST FILSYS directive:

- DONTDO/user name,.../
- DOONLY/user name,.../

Either option can be used when restoring from save tapes that were created with any of the SAVEMAST options.

RESTORES FROM DEVICE SAVES

Restoring from device saves requires that the System Master Catalogs and catalogs be restored first from the device designated as ST1. If several sets of device saves occur, the device designated as ST1 is processed first; only then can the other device saves be processed. A console message will indicate when the catalog restore is completed.

Any attempt to restore a device save before the System Master Catalogs and catalogs are restored will fail.

A restore from a full device save is another form of full restore and can be used serially to accomplish a total restore. The degree of concurrency for the restores is the same that was obtained from the saves.

NOTE: The "DEVICE" option on the RESTOREMAST directive is not intended to perform total restores by a succession of concurrent restores. This option is specifically intended to restore failed devices.

TOTAL RESTORES

A total restore writes to mass storage all SMC entries, all catalog structures, and all file content included on the save tapes that are processed during the restore function.

Total restores are specified by using a RESTOREMAST directive without options. The restore function will then use the same options that were used to create the save tapes. For example, if range options were used in the save function, those same ranges are used when writing save tape content to mass storage during the restore function.

Before catalogs and file restoration begins, data may be deleted from mass storage in one of the following ways:

- Execute the restore job. All catalogs and file content for the first SMC entry are deleted from mass storage and then are restored from the save tapes. The delete-then-restore sequence is repeated for each SMC entry until all entries are restored. Catalogs and files for any entry that is not on the save tapes, as well as SMC entries with busy files, are unaffected by the restore function.

- Prior to executing the restore job, execute the initialization function of the System Startup program to delete the content of all permanent mass storage devices. Then, execute the restore job to restore SMC entries, catalog structures, and file content for each user identification.

  The System Startup initialization function produces a faster restore than the alternate approach because the FMS catalog and file clear function is bypassed. However, the initialization function does not discriminate when clearing mass storage devices. All user identifications are cleared, regardless of whether or not data for a user exists on the save tapes. Catalogs and files for some users can be lost.

COMBINATIONS OF RESTORE OPTIONS

Combinations of restore options can be included on the RESTOREMAST directive to provide the installation personnel with additional flexibility. The options can appear in any sequence on the directive. However, be aware that various combinations of options must be used with caution.

Although the options that were specified on the SAVEMAST (master save) directive to create the save tapes can affect the restore function (e.g., hash contention may result), the possible combinations of save and restore options are too numerous to adequately describe. Nevertheless, the effects of some save and restore combinations are indicated later in this section (see the discussions of the various restore options).

Table A-3 presents a matrix showing some of the possible combinations of restore options. The numbers in the table refer to the Notes listed after it.

Table A-3. Combinations Of Restore Options

	DONTDO	DOONLY	RANGE	SINCE	DEVICE
DONTDO	-	2	5	1	6
DOONLY	2	-	6	1	6
RANGE	5	4	-	1	3
SINCE	1	1	1	-	1
DEVICE	6	6	3	1	-

Notes For Use Of Restore Option Combinations Table

1. These options are compatible (i.e., they do not result in an error condition).

2. These options are incompatible. The message ILLEGAL USE OF OPTION is written to the restore report, and the job is aborted.

3. Only files for user identifications within the specified range are restored to the specified device (also to non-specified devices if the files span multiple devices).

4. Only user identifications specified with the DOONLY options are restored. The RANGE option has no effect.

5. All user identifications that are specified with the DONTDO option and that are included in the specified range are excluded from the restore function.

6. These options are compatible. If the DOONLY option is included with the DEVICE option, files residing on the named device(s) are restored for user identifications specified with the DOONLY option. If the DONTDO option is included with the DEVICE option, files residing on the named device(s) are not restored for user identifications specified with the DONTDO option. The intent of the DEVICE option is to generate an all-inclusive restore of all user identifications with files and catalogs on the device. If a DOONLY or DONTDO option appears in combination with the DEVICE option on one RESTOREMAST directive, the DOONLY or DONTDO option must be included on each RESTOREMAST directive that specifies the DEVICE option for the inclusion of exclusion to be complete.

RESTORE LOCK

When a file catalog structure is restored to a device, it is marked restore locked. While the lock is set, requests to allocate a file or to modify its structure are refused with an error. The restore lock is removed when the file content is restored.

If the file content is not restored, the restore lock remains in effect. A restore lock may occur because of several conditions. These conditions and the appropriate steps to overcome them are as follows:

1. The execution of a RESTOREMAST or RESTORE directive is terminated abnormally after the catalog structure is restored for the user identifications specified; all files not restored before the abort occurred remain restore locked.

   - Rerun the restore with the "RSTL" option on the restore directive. Only the restore locked files are restored. When the restore is rerun with this option, the intervening tapes between the first tape and the tape being processed when the abort occurred do not have to be processed again.

2. A device is initialized during startup; all files that have content on the device are set restore locked.

   - Execute a device restore to restore the initialized device.

3. Device specifications for the file cannot be met because the device is not in the system or lacks sufficient disk space:

   a. If the device is not in the system, rerun the restore with the RESET/DEVICE/, RESET/DENIED/, and RSTL options.

   b. If the condition is due to lack of disk space, add more devices to the system and rerun the restore with the RESET/DEVICE/, RESET/DENIED, and RSTL options. Then, perform a total system initialization edit followed by a total system restore to reclaim lost space.

4. A file has been deleted and re-created after a save and before a restore. Or, a save done on one system is restored to another system in which the file already exists. Remove the restore lock condition by using either of the following methods:

   - Use RESET/DENIED/ restore option.

   - Release the file, then restore it. To release the file, the busy counts must be cleared using the File Modify (FMOD) directive with the RESET/BUSY/ option or by a system boot. Or, the file can be released by using a FILSYS activity run with $ PRIVITY (RF, RELMAS, etc.) statement.

5. One or more tape reels from a set of save tapes are not processed during the execution of a RESTOREMAST or RESTORE directive; all files residing on the tapes not processed are restore locked.

USING THE RESTORE TO PLACE FILES ON DEVICES

Three RESTOREMAST and RESTORE directive options can be used to place files on specific devices or on devices of a specific type: RESET/DEVICE/..., RENAME/.../, and RESET/NEWDEV/.

Once a file is constrained to a specific device or device class, the constraint will remain in effect until it is changed by a subsequent restore. These three options are used for any master restore and, if files do not exist in the system, for any user restore:

- RESET/DEVICE/

  This option removes the constraint from the device name or class and places the file on the device with the most space available, unless the next two options are used.

- RENAME/.../

  This option allows: (1) specific files or all files with device name constraints to be restricted to a different device name; or (2) specific files or all files with device class constraints to be restricted to a different device class.

- RESET/NEWDEV/

  This option is used with the RENAME option and allows every file that has no constraint or the same constraint to be assigned to a different device name or device class.

When all three of the above options are used, any file can be assigned different constraints; see the RESTOREMAST and RESTORE directives for appropriate format.

Threshold Options To Control File Spreading

A site can set various threshold options to control spreading of a large file (greater than or equal to 32K) across the normal set of eligible devices when the file is created or restored.

If the file is duplicated, only devices covering approximately half of the total eligible disk space will be candidates for the original file create/restore. This guarantees that devices are available for the duplicate create/restore. In addition to the devices which have been selected for the original file, their associated logical devices (if MSU5Ø1, etc.) are ineligible for the duplicate file creation.

The following thresholds can be used to control the file spreading:

- o space threshold
- o catalog threshold
- o descriptor thresholds.

These thresholds may be specified via three separate $ INFO statements in the System Startup job stream. If the thresholds are not specified in the Startup job stream, default values are applied. The threshold values may also be modified or displayed via system console verbs.

SPACE THRESHOLD OPTION TO CONTROL FILE SPREADING

To control file spreading, the site/system administrator can specify a space threshold to indicate how long to stay on a given device for a large file (32K or larger) before crossing to another device. To establish this threshold, a $ INFO statement of the following format is included in the System Startup job stream.

```
$ INFO FMSST/nnn
```

where:

nnn - percentage (1 to 100) of the device size; default is 50. This value can be modified by using the FMS/STnnn console verb, and can be displayed by using the FMS DI console verb; for a complete description of these verbs, refer to the GCOS 8 OS System Operator Messages manual.

The file create and restore functions of FMS will always request space on the most available device from the mass storage allocator. The request is for a single descriptor (32K llinks maximum).

After each request, a test is made to check if the space threshold has been exceeded. If it has, a new device selection is made and the current device (and any associated logical device) is not a candidate for selection again until all other eligible devices have been selected.

CATALOG THRESHOLDS TO CONTROL FILE SPREADING

The site/system administrator can supply the following $ INFO statement in the System Startup job stream in order to specify the percentage of the catalog area of an FMS catalog device that can be used for file content in file create and restore:

```
$ INFO  FMSCT/nnn
```

where:

nnn – percentage (Ø to 1ØØ) of the catalog area. If Ø is specified, no space may be obtained in the catalog area; if 1ØØ is specified, the entire catalog area can be used for file content. The default is 1ØØ. This value can be modified by using the FMS CT/nnn console verb, and can be displayed by using the FMS DI console verb; for a complete description of these verbs, refer to the GCOS 8 OS System Operator Messages manual.

If the affected device is an FMS catalog device, a test is made after each space request to the mass store allocator to see if the obtained descriptor describes space in the catalog area. If it does and if the catalog threshold is exceeded, llinks above the threshold (maybe the entire descriptor) are returned to the mass store allocator and a new device selection is made. The current device will not be a candidate for selection again.

DESCRIPTOR THRESHOLDS TO CONTROL FILE SPREADING

The site/system administrator may specify a descriptor threshold for a selected device by supplying the following $ INFO statement in the Startup job stream:

```
$ INFO  FMSDT/nnn
```

where:

nnn – threshold value; i.e., number of space descriptors (Ø to 127). A specification of Ø means unlimited descriptors; default is 8. This value can be modified by using the FMS DT/nnn console verb, and can be displayed by using the FMS DI console verb. For a complete description of these verbs, refer to the GCOS 8 OS System Operator Messages manual.

The descriptor threshold is only in effect if the space threshold for the device is greater than the available space on the device. After each space request to the mass store allocator, a test is made to see if the descriptor threshold is in effect. If it is and it is exceeded, a new device selection is made. The current device and all associated logical devices are not eligible for device selection again until all other eligible devices have been selected.

Rerunning Restore Functions After Abnormal Termination

Although instances of abnormal termination during the processing of restore and save functions are infrequent, they do occur and halt the processing. To rerun a restore function that terminated prematurely as a result of system failure or abnormal termination:

1. Resubmit the job with the same options plus the RSTL option. The RSTL option will allow restoration only of those files that were not restored before the abrupt termination.

2. Next, use only the first tape of the save set that was being processed and the tape on which the abort occurred to continue processing (skipping all tapes between these two).

   NOTE: If the RSTL option is not specified when the job is resubmitted, the restored files will be restored again and all the tapes will have to be reprocessed.

OUTPUT REPORT FROM RESTORE FUNCTION

Each RESTOREMAST directive creates a restore report, which is printed following the Execution Report.

The restore report lists all user identifications, catalog structure, and file content that was restored. The 12-word SMC entries are listed first, followed by the catalog structure in user identification sequence. The report then lists all file content restored for each catalog.

The report also lists possible errors. A summary of error messages can be obtained by submitting a $ SYSOUT ER JCL statement with the restore activity. This summary will be printed at the end of the execution report.

If desired, the printing of the restore report can be suppressed by specifying the LISTOPT/NO/ option on the RESTOREMAST directive.

Recovery From Failed Permanent Device

USE OF SAVE TO RECOVER FROM DEVICE FAILURE

When a permanent device fails, an attempt should be made to recover and restore the data from the failed device.

Because the data may be retrievable from the failed device, a device save should be performed to recover the data for a subsequent restore. Such action will ensure that the data is completely up-to-date and, thus, dispense with the need to reconstruct the files with the changes that occurred after the latest save was performed.

If the device save is unsuccessful, the latest available save tapes must be used to restore the device. However, the device must be initialized before it can be restored.

INITIALIZE FAILED DEVICE BEFORE RESTORE

Once the data is retrieved from a failed device, the system must be booted and the device initialized before proceeding with the restore. The initialization phase encompasses:

- System Master Catalogs residing on the failed device are copied from the duplicate set of System Master Catalogs.
- If the device contains user catalogs, these catalogs are copied from the duplicate set of catalogs in existence on other devices. If a duplicate set of catalogs does not exist, the entire set of catalogs must be restored by some other form of restore. In such an instance, lack of duplicate catalogs may cause considerable loss of disk space, because it is not possible to determine the location of pertinent files spread over several devices in order to release the disk space.
- When the system boot and the initialization phase are completed, the catalogs and respective files that were on the failed device are available for use after the device is restored.

RESTORE A FAILED DEVICE

After the system boot is completed and the device has been initialized, the device is restored by specifying the failed device with the DEVICE option on the RESTOREMAST directive. The following considerations apply to the device restore process:

- Any type of save can be used as input to the restore.
- Only one device restore need be executed if the input is a device save that specifies the failed device.
- If the input is not from a device save, a device restore must be executed for all saves that constitute the total save. For example, if the total save is composed of six range saves, then a device restore must be performed from each of the six saves.
- Incremental and since saves can be used together with their respective total saves.
- Only restore locked files are restored (the device must have been initialized). Files created or restored after the device initialization, but before the device restore, are not affected.
- The SMCs and catalogs are not restored at this time because they were restored during the initialization process.
- The files are restored from the duplicate copy, if available; otherwise, they are restored from the save tape.
- Caution must be exercised to ensure that files containing related data are synchronized.

NOTE: Because of the time required to recover from a device failure, it is seldom possible to maintain a quiescent (inactive) system when attempting to restore an entire device. Therefore, other processes can (and may) access and acquire space on that device. As a result, there may not be sufficient available space remaining on the device to complete the restore operation. This potential problem can be averted by dedicating the device solely to the restore process, thus, preventing allocation of space to other processes until the restore has successfully completed.

Master Saves And Restores On Removable Structured Packs

Master save and master restore functions are similar in their application, both to permanent devices and to removable structured devices; however, some differences do exist as described below.

SAVE FROM A REMOVABLE STRUCTURED PACK MASTER

Permanent files and catalogs that reside on removable structured disk packs are saved by specifying the DEVICE/device type, pack serial number/ option on the SAVEMAST directive. This is accomplished according to the following criteria:

- All options and rules applicable to saving on permanent devices are also applicable to removable structured devices, except the device name option.
- The DEVICE/device name/ option is not allowed with removable structured disk pack saves.

RESTORE TO REMOVABLE STRUCTURED PACK MASTER

Permanent files and catalogs are restored to a removable structured disk pack by specifying the DEVICE/device type, pack serial number/ option on the RESTOREMAST directive. (This option can be omitted if the restore and save occur on the same disk pack.) The following rules govern the use of this procedure:

- Only one removable disk pack can be specified on the directive.
- The PMCs, catalogs, and file content are copied to the disk pack for specified users.
- Only save tapes processed by a SAVEMAST directive specified for a removable structured disk pack are valid as input to the restore function.
- When files are restored to a removable pack that is different from the pack from which files were saved, pack pointers within the structure on permanent devices are not modified to reflect the new pack. To delete pointers from one pack and to create pointers on another pack, iclude the following directives in a FILSYS activity. (A set of directives must be included for each pointer that is to be deleted and created.)

a. On a RPURGE directive, specify the catalog string that is to be removed.

b. On a CCREAT directive, specify the catalog string and idenfity the pack serial number.

- The packs can be online or offline at the time the FILSYS activity is run. However, the pack to which files are being restored must be online when the restore function is performed.

- All options and rules applicable to restoring on permanent devices are also applicable to removable structured disk pack restores, except the device name and RESET/RENAME options. (These two options are not allowed with removable structured disk pack restores.)

User Save And Restore Functions

Master save and restore functions are initiated by the site/system administrator to provide protection for specific substructures or all substructures.

User save and restore functions, however, are initiated by the user to provide protection for the user's substructure. The following rules are to be observed for this procedure:

- The save and restore functions are initiated by means of the SAVE and RESTORE directives, respectively.

- On a user save, only catalogs and files in the user substructure are saved on a separate save volume.

- On a user restore, only the user substructure is restored but it can be restored either from a user save or from a master save that includes the user substructure.

- If the catalogs and files to be restored do not exist in the system, the procedure for restoring is the same as that used for master restores of catalogs and file content.

- If the catalogs and files exist in the system, they are reused. The RESET and RENAME options do not apply.

- Because a user restore is controlled by existing catalogs (if there are any), a user can perform several forms of file modification by means of save and restore not otherwise available. In each instance of modification, a save is performed, the old file is modified and then the restore is done. For example, by specifying file duplication when the file description is modified, the file content can be restored to both an original and duplicate.

- Catalogs immediately subordinate to the UMC can be moved from a permanent device to a removable structured disk pack or vice versa. This is accomplished by saving the catalog, deleting the catalog, then recreating the catalog on the desired device and, finally, restoring the catalog.

- Use of the NEWNAM option allows the user to save catalogs and files, and to restore them to a different user identification with the same subordinate pathname to the User Master Catalog (UMC). This feature can be quite useful when the need arises to split large user identification structures. Privity is required for this option.

- The SINCE, INCR, and RSTL options are used in the same manner as for master saves and restores.

Volume Set And Restore Functions

The funtionality discussed above for permanent devices also applies to volume sets, including device save and restore. Master saves taken from perm devices, removable structured packs, or volume sets can be restored to any volume set through a restoremast activity, using the VOLSET/volset name/ option.

User saves and restores on volume sets follow the same rules discussed for user saves and restores on perm devices and removable structured packs. For example, a user catalog, such as a UMC, could be saved from perm devices, a removable structured pack, or a volume set, then released and recreated on a different set of device(s) (perm, removable structure pack, or volume set). A user restore could then restore the saved catalogs and files to the new set of devices.

PX File Processing During STAK Save

If multiple save directives with the STAK option are included in a $ FILSYS activity or job, a JCL statement of the following form should be included in each activity:

```
                    1
1       8           6
$       FILE        PX,lud,1L
```

The presence of this JCL statement will ensure that file serial numbers, reel serial numbers, and reel sequence numbers will always ve correct in the execution report and operator mount messages. The PX file is used to communicate this information between the different save ..., ,STAK directives. The file is read at the beginning of each save and updated at the end of each save. (The STAK option on a SAVE directive is described later in this appendix.)

The content of the PX file, in the following format, is reported at the beginning and end of the save report:

```
PX FILE IS PRESENT AND HAS THE FOLLOWING CONTENT

FSN = fffff  SER# = rrrrr  SEQ# = nnnn  FILE# = ØØØØ  (PS)
FSN = fffff  SER# = rrrrr  SEQ# = nnnn  FILE# = ØØØØ  (XS)
```

where:

fffff - file serial number of the tape for the first PS or XS save in the job

rrrrr - reel serial number of the current PS or XS tape

nnnn - reel sequence number of the current PS or XS tape

ØØØØ - file ordinal number; e.g., ØØØ1 for first save, ØØØ2 for second save, etc. Note that this ordinal number is for the <u>previous</u> save if at the beginning of the report, and for the save <u>just processed</u> if at the end of the report.

The (XS) line in the report will only be reported if a $ TAPE XS,... JCL statement is included in the activity.

NOTE: When the file is read at the beginning of the first save in the job, there obviously is no data in it. Therefore, the following line will be reported in lieu of the FILE IS PRESENT... message:

```
PX FILE IS PRESENT BUT HAS NO DATA
```

MASTER/USER SAVE AND RESTORE FILSYS DIRECTIVES

This section describes the master and user save and restore FILSYS directives (See Table A-4), and provides examples of their use. Special attention should be given to the notes applicable to each directive. These notes normally follow the options and include exceptions and restrictions that must be observed. Save and restore operations were discussed earlier.

Table A-4. Master Save And Restore Directives

SAVEMAST	-	Master File Save
RESTOREMAST	-	Master File Restore
REPLACE	-	Replace Defective Pages

The valid Master Save and Restore FILSYS directives are defined below in the order listed in Table A-4.

MASTER SAVE AND RESTORE DIRECTIVES

Master Save Directive

FORMAT

```
SAVEMAST    option(s)
```

REQUIRED

None

OPTIONS

1. LISTOPT/ { YES } /
            { NO }
            { NOSS }

   YES is assumed; if YES is assumed or specified, the names of all files saved are listed.

   If NO is spceified, only the names of saved files that are write busy, abort locked, with defective spaces, or wholly or partially unreadable are listed.

   If NOSS is specified, the listing of the catalog and file names is suppressed during substructure processing. The listing of names of restored files is controlled by the YES/NO parameter.

2. INCR

   Save only the files that have:

   a. INCRSAVE/YES/ specified or assumed for them.

   b. been written to or restored since their last save.

   c. not been eliminated because of DONTDO or DOONLY and/or RANGE, SINCE, and DEVICE options on the SAVEMAST.

   d. did not remain write busy during the save (unless journalizing is also specified).

   A file is regarded as having been written to if the allocation was marked by IOS to show that at least one write was issued during the allocation, or, if on system restart, the file description shows that a write allocation to the file was interrupted by the system failure. A test mode allocation is not interpreted as a write allocation.

SAVEMAST OPTIONS (Cont'd.)

3. DONTDO/user name,.../

   Files for named users are not saved.

4. DOONLY/user name,.../

   Save only the files for named users. DONTDO and DOONLY options must not be specified together in one use of the directive.

5. RANGE/32nd,32nd/

   Save only the files for users identified on the master catalog listing as belonging to 32nds (into which user names are hashed) in the inclusive range specified. The 32nds are numbered Ø,1....,31. For example, RANGE/Ø,5/ specifies that files for users hashing to any of the first six 32nds, those numbered Ø,1,2,3,4, or 5, are to be saved. More than one RANGE/.../ options may be given to specify several ranges.

   The RANGE option can be used to divide the work of saving all files among several concurrently executing save jobs. The DONTDO option may be used in conjunction with the RANGE to give a finer division of work, or to avoid the saving of files for some users in the range specified.

6. SINCE/ { TODAY }
          { date } [,time] /

   Date and time are in format mmddyy and hhmm, hh:mm, or hh.hhh, respectively. Unless their restore indicator is ON, only those files that have been written to since the date (and time) specified are saved. Files that remain write busy during the save are not saved, however, unless journalizing is specified for the file. If the restore indicator is ON for a file, the file is saved independently of the last change date or time.

   The difference between a SINCE and INCR save is that the SINCE data and time can be that of the last total save so that incremental saves are accumulated into one SINCE save. Furthermore, only files for which INCRSAVE/YES/ is specified or assumed are saved using the INCR option, while the SINCE option causes files to save regardless of the INCREASE specification. Use of both INCR and SINCE is possible but not often of value.

SAVEMAST OPTIONS (Cont'd.)

The RESET/RFILES/ option may be used in conjunction with SINCE saves to save a file, if the file restore indicator is set ON, and to turn OFF the restore indicator. Any save that is not a SINCE save unconditionally turns OFF the file restore indicator. During a SINCE save, the RESET/RFILES/ option can be used to turn OFF the file restore indicator and prevent redundant file saving in succeeding save operations. This may be accomplished when the succeeding SINCE saves have a different date and time parameter. Then, only files changed since the last time specified and files restored since the last save are saved. If the date and time parameters are not changed in succeeding saves, the option should not be used, because files saved on previous saves must be saved again.

When SINCE saves are used, if a total save is not taken following a total restore, the first SINCE save will save all the files, unless the RESET/RFILES option is used for the total restore.

A file is regarded as having been written to if the allocation was marked by IOS to show that at least one write was issued during the allocation, or, if on system restart, the file description shows that a write allocation to the file was interrupted by the system failure. A test mode allocation is not interpreted as a write allocation.

7. DEVICE/ [ONLY,] device name,.../

Save the files that are assigned to the named devices. Files assigned partially to devices named and partially to devices not named are saved entirely unless the optional word ONLY is present, or the file specifies duplication or journalizing. In such cases, only the portion of the file on the named device is saved. Catalogs are saved only if one of the devices names is ST1 (regardless of whether ST1 actually contains catalogs or not).

If a file is protected by journalizing of file changes and the DEVICE option is specified on the save, only the parts of the file contained on the specified device(s) are saved. It is assumed that the journal will be used to update the parts restored from the save so they will be compatible with parts not saved.

SAVEMAST OPTIONS (Cont'd.)

8. DEVICE/pack type,pack serial number/

   Save only the catalogs and files that are assigned to the specified pack, which must be mounted.

9. VOLSET/volset name/

   Save only the catalogs and files on the specified volume set. If the VOLSET option is specified for the SAVEMAST directive, specific volumes within the volume set may be saved by also specifying the DEVICE option. If the VOLSET and DEVICE options are both specified, then all devices listed in the DEVICE option must be members of the volume set named in the VOLSET option.

   All other options may also apply with the use of the VOLSET option except the DEVICE/pack type,pack serial number/ option.

10. RESET/RFILES/

    Turn OFF the restore indicator for each file after it has been saved. Normally, this option is used with the SINCE option (where the date/time specified is that of the previous SINCE save). The restore indicator for each file saved is automatically turned OFF if the save is without the SINCE option. In such an instance, this option is meaningless.

11. MULTIUSER

    Save all files for specified users, even if some users reside on permanent devices and others reside on removable structured packs. A subsequent RESTOREMAST from such a save restores all files to permanent devices. The files to be saved can reside on either permanent or removable devices; however, all removable packs to be accessed must be online as structured removable disk packs. The sequence in which the files appear on the save tape is determined by their position within the system master catalog.

    This option is valid only when the system master catalog entry references the removable disk pack; that is, all structures and files pertaining to the user are contained on the specified device. Other options can be used in conjunction with this option, but the DEVICE/pack option may produce undesirable results because of conflict between the intent of the two options.

One of the following conditions may occur with the MULTIUSER option:

- o If an error occurs while attempting to access a removable pack master catalog or pack user master catalog, an FMS error message is issued and the save is terminated.

- o Entries in pack master catalogs are not copied to the save tape; the tape will contain the system master catalog entry for the user. If the system master catalog entry does not specify sufficient space to permit the restoring of all the structures and files that reside on the removable pack, a subsequent attempt to do a master restore will cause the files to be truncated. To avoid this occurrence, either (1) increase the space specified for the system master catalog entries to permit a subsequent RESTOREMAST or (2) create the system master entries before the restore, then do a user restore of each individual user.

12. BUSY

    If this option is specified, a "write busy" status will not cause a file to be bypassed.

13. INCLSYS_

    Include system userids (i.e., those beginning with SYS) in the save. If any other selection criteria (DONTDO, DOONLY, RANGE, DEVICE, INCR or SINCE) is also specified, only the files under SYS_userids that also meet the other selection criteria will be included.

SAVEMAST NOTES

1. The only files saves are those that meet the selection criteria of DONTDO or DOONLY and INCR, RANGE, SINCE, and DEVICE (whichever of these options are specified). Ordinarily, it will not be necessary or use more than one option to select the files to be saved, but all can be used subject only to the constraint that both DONTDO and DOONLY are not specified. Often, none of these options will be necessary, as when all files are to be saved in a single sequence of save volumes.

2. If a file code XS is designated in the activity, a duplicate (backup) copy of file PS is recorded on file XS. File PS can be assigned one unit, or two units to allow unit switching depending on the number of volumes expected. If file XS is present, it should be assigned the same number of units as file PS.

SAVEMAST NOTES (Cont'd.)

3. All content of space currently assigned to each file is saved; however, if the file description indicates that the file has never been written to, no content is saved. In no case is a search made for an end-of-file mark to detect the last space written to.

4. Files are generally saved regardless of their condition - abort or security locked, write busy, or with one or more defective or unreadable spaces. If a file is write busy, an attempt is made to save the file later when it is no longer write busy, but when the attempt fails, the file is save just as it is encountered. An exception is the case where the INCR or SINCE option is used and journalizing is not specified for the file; the file is not saved if it remains write busy. Unless the BUSY option is specified when the file is saved during write busy, a warning is provided, in case it is considered desirable to specially save such files later, and the save is so marked.

5. If a file is found partially or wholly unreadable when it is being saved, it is saved just as it is read, but both the file description and the save record are marked defective and a warning is provided in case recovery is to initiated. If the file is duplicated, parts found unreadable from the original are read from the duplicate.

6. If the file is already marked as having defective space(s) or is abort locked, again the file is saved just as it is, but the save record is marked, and a warning is provided.

7. Files on removable structured disk packs are not saved unless the DEVICE/pack/ option is used and the specified pack is mounted, or the MULTIUSER option is used.

8. A file on magnetic tape or nonstructurted disk pack is not saved.

9. Multiple SAVEMAST directives must not be used within the same activity. Only the last SAVEMAST directive in the input stream is processed.

10. The SAVEMAST directive requires a $ PRIVITY JCL statement.

11. Certain user names are reserved for the system and cannot be saved. Even if specified in a SAVEMAST directive, neither structure nor content will be saved for those user names.

12. Users should postpone running any RESTOREMAST jobs of USERIDs or RANGEs which lie within the same set of USERIDs or RANGEs as those contained in any SAVEMAST jobs currently in the system until the SAVEMAST jobs terminate.

EXAMPLES

1. SAVEMAST

   Files and catalogs on fixed devices for all users are saved. Only exceptions are reported.

2. SAVEMAST DOONLY/CORPORATE/

   Only files and catalogs on fixed devices for the named user (CORPORATE) are saved.

3. SAVEMAST DONTDO/SALTRIVER/

   Files and catalogs on fixed devices for all users except the user named (SALTRIVER) are saved.

4. SAVEMAST DEVICE/450PK,P3715/

   Files and catalogs for all users on the named pack are saved.

5. SAVEMAST DONTDO/SALTRIVER/,DEVICE/DS1,DS2,DS3/

   Files on the named devices for all users except the user named are saved.

6. SAVEMAST RANGE/14,21/

   Files and catalogs on fixed devices for any users whose names hash to the 14th through 21st sections are saved.

7. SAVEMAST RANGE/22,26/,DONTDO/SALTRIVER/

   Files and catalogs on fixed devices for all users whose names hash to the 22nd through 26th sections, except the user named, are saved.

8. SAVEMAST RANGE/0,15/,DEVICE/450PK,P3715/

   Files and catalogs on the named pack for all users whose names hash to the first 16 (0 through 15) sections are saved.

9. SAVEMAST DOONLY/CHICAGO,CORPORATE,DOMESDAY,
   FIEF,INSTALL,J.P.JONES,OPERA-1,PRALINE/,LISTOPT/YES/

   Files and catalogs on fixed devices for the named users are saved, and a list is produced showing each file saved.

10. SAVEMAST SINCE/TODAY/

    Catalogs on fixed devices and all files on fixed devices that have been written to today are saved.

11. SAVEMAST SINCE/070679,17.500/,DONTDO/SALTRIVER/

    Catalogs on fixed devices and all files on fixed devices that have been written to since 5:30 P.M., 6 July 1979 are saved, except those for the named user.

12. SAVEMAST INCR,LISTOPT/YES/

    Catalogs on fixed devices and all files on fixed devices that have both been written to since the last save and have specified or assumed for them INCRSAVE/YES/ are saved. A listing of such files is also produced.

13. SAVEMAST DOONLY/CORPORATE,J.P.JONES/,
    DEVICE/450PK,P3715/,SINCE/070679,17:30/

    Catalogs on the named pack and files on that pack that have been written to since 5:30 P.M., 6 July 1979 for the users named are saved.

14. SAVEMAST LISTOPT/YES/

    Files and catalogs on fixed devices for all users are saved and listed.

Master Restore Directive

FORMAT

RESTOREMAST option(s)

REQUIRED

None

OPTIONS

1. LISTOPT/ { YES } /
            { NO   }
            { NOSS}

   YES is assumed; if YES is specified (or assumed), the names of all restored files are listed.

   If NO is specified, only the names of restored files are listed that are restored from a save marked write busy while saved, abort locked, with defective space, or wholly or partially unreadable.

   If NOSS is specified, the listing of the catalog and file name is suppressed during substructure processing. The listing of names of restored files is controlled by the YES/NO parameter.

2. DONTDO/user name,.../

   Do not restore files for named user(s).

3. DOONLY/user name,.../

   Restore only the files for the named user(s). DONTDO and DOONLY options must not be specified together in one use of the directive.

4. SINCE/ { TODAY } /
           { date }

   Date is given in mmddyy format. Only files are restored that are marked on the save as having been allocated or modified since the date specified. Allocated means that a request to use the file was granted; modified means the file description was modified by means of a File Modify directive. Notice that allocation or modification after the save is not considered; only dates of last allocation and modificatioin at the time of the save are considered.

RESTOREMAST OPTIONS (Cont'd.)

5. DEVICE/device name,.../

   Restore only the files that appear in existing as being assigned wholly or partially to one or more of the named device(s). If contents reside on the specified devices, duplicate copies must exist on unspecified devices.

   Only files which are in "restore-lock" status are restored; therefore the specified devices must have been initialized before restore can take place. During the initialization, system master catalogs and user catalogs are restored, if required, and the files on the initialized device are set restore locked.

   If an existing file description shows the file to be duplicated, the file content is restored from the duplicate and the one on the save is not used unless the duplicate file content is null or unavailable. A file description currently exists, however, only if catalogs are duplicated or a DEVICE restore is performed for device(s) that did not contain catalogs.

   The whole file is restored including parts on devices not specified, if any. An exception is made when FMS journalizing was specified for the file at the time of the save. Then only the part of the file on specified device(s) is restored, since rollforward using journals can be relied on to update the part restored. If a duplicate of the file is available, only the part of it duplicating the part of the specified device(s) is restored. For detailed information about rollforward refer to the GCOS 8 OS Integrity Control manual.

6. DEVICE/pack type, pack serial number/

   Restore catalogs and files to the specified pack, thus overriding the pack type and pack serial numbers from which the save was taken. Note that the save must have been taken from a removable structured pack.

   Only catalogs on that pack are restored, and existing catalogs on fixed device(s) and other packs are not affected. If references to catalogs on the restored pack do not exist on fixed device(s) or have been destroyed, they must be created before files on the pack can be used. The pack must be mounted at the time of the restore.

RESTOREMAST OPTIONS (Cont'd.)

7. VOLSET/volset_name/

   Restore specified catalogs and files to the named volume set. If the VOLSET option is specified for the RESTOREMAST directive, specific volumes within the volume set may be restored by specifying the DEVICE option. If the VOLSET and DEVICE options are both specified, then all devices listed in the DEVICE option must be members of the volume set named in the VOLSET (volset name) option. All the other options may also apply with the use of the VOLSET option except the DEVICE/pack type,pack serial number/ option.

8. RANGE/32nd,32nd/

   Restore files for users identified on the master catalog listing as belonging to 32nds (into which user names are hashed) in the inclusive range specified. For example, RANGE/Ø,5/ specifies that files for users hashing to any of the first six 32nds (those numbered Ø through 5) are to be restored.

9. RESET/RFILES/

   Set the file restore indicator in the OFF position. In the normal condition the file restore indicator is in the ON position.

   This option should be used when performing a total system restore. Use of this option prevents succeeding SINCE or INCR saves from saving the restored files unless they are updated.

10. RESET/ { DEVICE } /
            { DN1 [,DN2]...}

    Remove all constraints either from files being restored if device name or device class was specified, or from files restricted to specified device names if device name was specified (see Notes 16, 17, and 18).

11. RENAME/ { ALL } /
            { DN1 [,DN2]...=DNa [,DNb]...}

    The files that are constrained to any device specified to the left of the equal "=" sign are reassigned to any device in the specified group set to the right of the "=" sign. If "ALL" is specified, any files with a device name constraint are reassigned (see Notes 16, 17, and 18).

12. RENAME/ { ALL } /
{ CL1 [,CLK] ...=CLA:...}

Unlike the previous option, only one device class can be specified to the right of the "=" sign (e.g., CLK=MSU450.) (see Notes 16, 17, and 18).

13. RESET/NEWDEV/

Every file that either has no constraints or has the same constraints as specified in the RENAME option is eligible for reassignment (see Notes 16, 17, and 18).

Used only with the RENAME OPTION.

14. VERIFY/ { YES } /
{ NO }

NO is assumed; that is, the write command is used if the VERIFY option is not specified. If YES is specified, the write command and the VERIFY option are used when the catalog structure and file content are written to disk.

15. RSTL

Restore only the files in "restore lock" status. This option is used in a restart condition after a failed restore.

16. INCLSYS_/ {ALL } /
{uid-1,uid-2 ...}

Specify only system userids (i.e., those beginning with SYS_) in the USERID list. If ALL is specified, every system USERID will be included.

Files for system userids will be restored only if the userid is included in the list. Otherwise, system userids will be skipped during the restore.

17. SECURE

Used to indicate that the USERIDs and files on the tape may be classified. Save tapes created on a secure system will contain an indicator that marks the tape as secure.

This option is valid only if the GCOS 8 System Security Manager (SSM) is configured; for additional information, refer to the GCOS 8 OS Security User's Guide.

NOTES

1. In addition to the selection criteria expressed in RESTOREMAST options, it is obvious that the only files that can be restored are those that are contained on the save(s) being presented. Also, if the files so contained, only those meeting criteria expressed by the options are restored. If the save was only of files on specified devices or in specified SMC sections, for example, and the Restore specifies DOONLY, then only files cataloged under the user names specified and present on the save will be restored. No files may both meet the criteria and be present on the save, as when the save is of SMC sections not including DOONLY specified names. When inconsistencies between save contents and restore options are obvious, as in the example above, the error is reported so that a correct save or correct restore specifications can be provided.

2. If restoring is being done for a user, ordinarily all catalogs for the user (except those on structured removable disk packs) are also restored.

3. Restoring from save(s) performed under the INCR option requires that the installation present the most recently performed incremental save first, then less recently performed saves in reverse chronological order, and finally a total (not incremental) save. If catalogs are to be restored from the saves, the version of catalogs contained on the first save presented is the one that is restored. File content is restored from this sequence of saves only if the catalog shows the file existed at the time of the most recent save and if the file content has not already been restored from a previously presented member of the sequence of saves. When the DEVICE option is used, the existing original or duplicate catalogs control restoring of file content.

   In any case, file content is restored only for files existing either currently or at time of the most recent save and only the most recent version of the file is restored.

4. Restoring from save(s) performed under the SINCE option is similarly performed. The installation should present the most recent (or only) SINCE save first, followed by those less recently performed (if any), and finally a total save.

5. When file content is restored from a save and the file description that is used specifies that the file is to be duplicated, space is obtained for two copies of the file and the file content is written to both spaces.

RESTOREMAST NOTES (Cont'd.)

6. Device specifications in whatever file description is used - currently existing or restored from save - control where the file content for that file is restored. If the specifications cannot be met, the file content is not restored and a report is issued. Any device specifications can be overridden by the RESET/DEVICE/ option and/or RENAME/ option, alone or in conjunction with the RESET/NEWDEV/ option. Files restored from a device save are assigned space only on devices saved. That is, if the save included the option DEVICE/DS1,DS2,DS3, a restore from this save assigns space only on DS1, DS2, and DS3; however, if the RESET/DEVICE/ option is used, the files are placed on available devices.

7. When restoring from a device save, the first restore must be performed on the ST1 device save. The system master catalogs as well as the catalog structure are always on the ST1 device save and are the first file structures to be restored. After the catalogs are restored, restoring can be effected concurrently from the other device saves. If restoring is attempted from another device (not ST1) before the catalogs are restored, no restoring occurs.

8. When file content is not restored, the file description shown no space assigned to the file, which prevents any type of allocation to the file. Users can determine, by listing the file description, the cause of the no restore. The file description can then be deleted and re-created with a new device specification, and the file can be resorted. If a MASLST directive or a CLIST directive has SRSL specified for a file, the file must be restored from a previous save tape, because the file was already restore locked in the latest save tape.

9. If a file is abort locked when it is saved, the save is so marked. When file content for such a file is restored, the file description is marked to show that the file is abort locked. If the file description is so marked, but the save from which the file content is restored is not, the abort lock is removed. Similarly, a file with one or more parts marked defective when saved causes its file description to be marked accordingly, and a file description is so marked only when the save from which the restore is done is also marked.

   A report is made of such exceptions in case earlier saves are to be used or recovery action is to be initiated or discontinued.

RESTOREMAST NOTES (Cont'd.)

10. Saves done under INCR or SINCE options are not made while the file is write busy, unless journalizing is specified for the file or the BUSY option is specified. File restores from saves not done under these options, however, can be made while the files are write busy even though no journalizing is specified for them. A report of such restores is made in case restore from an earlier save is to be performed or recovery action initiated, and the file description is marked abort locked if any ABORT option is specified.

11. A RESTOREMAST uses only saves performed by means of SAVEMAST. If more recent saves have been performed by means of a SAVE directive or another save program, the user must note when restores from these are required and initialize them. The date and time of the last write to the file at the time of the save from which the file has been restored is set as date and time of last change in the file description to indicate what version is restored.

12. Restoring from a save of a removable disk pack to a permanent disk requires that the structures to be restored be released and the SMC and UMC on the permanent disk be re-created, followed by a user restore.

13. Multiple RESTOREMAST directives must not be used in the same activity. Only the last RESTOREMAST directive in the input stream is processed.

14. This directive requires a $ PRIVITY JCL statement.

15. Certain user names are reserved for the system and cannot be saved. Even if specified in a SAVEMAST directive, neither structure nor content will be saved for those user names.

16. If the RESET/DEVICE, RENAME/, and RESET/NEWDEV options are all used, every file is eligible for reassignment.

17. New constraints remain on the file until they are changed by a subsequent SAVE and RESTORE.

18. The options for the RESTOREMAST directive are effective for any RESTOREMAST, but do not apply to removable structured packs.

19. Users should postpone running any RESTOREMAST jobs of USERIDs or RANGEs which lie within the same set of USERIDs or RANGEs as those contained in any SAVEMAST jobs currently running in the system until the SAVEMAST jobs terminate.

RESTOREMAST NOTES (Cont'd.)

20. RESTOREMAST will override the file space limit in the master catalog if necessary. If this occurs, space used will exceed space allowed.

21. FILSYS will not restore a secure tape (i.e., a tape created when the SCC security option is active) when the SECURE option is not used.

EXAMPLES

1. RESTOREMAST

   Files and catalogs on fixed devices for all users are restored. Only exceptions are reported.

2. RESTOREMAST DOONLY/CORPORATE/

   Files and catalogs on fixed devices for the named user (CORPORATE) are restored.

3. RESTOREMAST DONTDO/SWEETWATER/

   Files and catalogs on fixed devices for all users except the user named (SWEETWATER) are restored.

4. RESTOREMAST LISTOPT/ALL/

   Files and catalogs for all users are restored and a list of each file restored is produced.

5. RESTOREMAST DEVICE/ST3/

   Files shown in existing catalogs for all users to be assigned to the named device are restored.

6. RESTOREMAST DEVICE/DP1/,DONTDO/SWEETWATER/

   Files shown in the existing catalogs for all except the named user to be assigned to the named device are restored.

7. RESTOREMAST SINCE/070679/

   Files and catalogs that describe these files on fixed devices for all users are restored only if the saved file description shows that the file has been allocated or the file description modified since July 6, 1979.

RESTOREMAST EXAMPLES (Cont'd.)

8. RESTOREMAST RANGE/Ø,15/

   Files and catalogs for users whose names hash to the first sixteen sections are restored. Ordinarily, the save from which restoring is done specifies the range of sections, but sometimes it may be desirable to restore only a subset of the ranges on a save.

9. RESTOREMAST RESET/DEVICE/

   The files restored have all constraints removed and are placed on those devices with the most space available.

10. RESTOREMAST RENAME/DS1=DS2,DS3:DS4,DS5=DS6/

    The files restored that are constrained to DS1 will be constrained to DS2 and DS3. The files restored that are constrained to DS4 and DS5 will be constrained to DS6.

11. RESTOREMAST RENAME/MSØ45Ø=MSØ5ØØ/

    The files restored that are constrained to device type 45Ø will be constrained to device type 5ØØ.

12. RESTOREMAST RENAME/ALL=DS2,DS3/

    All files restored that have device name constraints will be constrained to DS2 and DS3.

13. RESTOREMAST RENAME/ALL=DS2,DS3/,RESET/NEWDEV/

    All files that are restored and do not have device class constraints will be constrained to DS2 and DS3.

14. RESTOREMAST RENAME/ALL=DS2,DS3/,RESER/DEVICE/,RESET/NEWDEV/

    All files that are restored will be constrained to DS2 and DS3.

15. RESTOREMAST DOONLY/JOHN/,SECURE

    Files and catalogs on fixed devices for the named user are restored. The SECURE option indicates that the tape may have been created on a secure system (i.e., a system on which the SCC security option was active), and the USERIDs and files on the tape may be classified.

    This example is applicable only if the GCOS 8 System Security Manager (SSM) is configured; for additional information, refer to the GCOS 8 OS Securty User's Guide.

Master Replace Directive

FORMAT

REPLACE *file name*,...

REQUIRED

At least one qualified file name must be specified. A $ USERID JCL statement or USERID directive must be provided with the name of the creator of the file or one with RECOVERY permission. If a $ PRIVITY JCL statement is present, however, no $ USERID JCL statement or USERID directive need be given.

OPTIONS

Additional qualified file names may be specified. Unless a $ PRIVITY JCL statement is present, a user name provided must be that of the creator or, or a user with RECOVERY permission for, all named files.

NOTES

1. The file description for each named file is consulted for numbers of pages marked defective in each file. The version of each such page is read from the presented save and written to the file. If the file is duplicated and a good copy is available, this copy is read and written to the file.

2. If necessary, the space the page is assigned to is replaced by a newly assigned space to ensure that the page written to the file can subsequently be read.

3. The pages continue to be marked defective in the description, for it is expected that the replacement will be followed by a rollforward from a journal to obtain more recent versions of pages that have been changed since the save. However, if the date and time of the save from which replacement is made is not earlier than the date and time of last change to the file as recorded in its file description, then the pages will not be marked defective.

4. A report is made showing pages replaced and whether rollforward is required. For detailed information about rollforward refer to the GCOS 8 OS Integrity Control manual.

REPLACE EXAMPLES

1. REPLACE CORPORATE$SEPT25/CUSTOMER$NOW

   The file named CUSTOMER cataloged under the user name CORPORATE is to have defective parts restored from the save.

2. REPLACE CORPORATE$SEPT25/CUSTOMER$NOW,
   CORPORATE$SEPT25/EQUIP,INSTALL/SYSA/DETAIL

   Files named CUSTOMER and EQUIP, cataloged under user name CORPORATE, and file named DETAIL, under user name INSTALL, are to have defective parts restored from the save.

USER SAVE AND RESTORE DIRECTIVES

Table 5-5. User Save And Restore Directives

SAVE	-	User File or Catalog Save
RESTORE	-	User File or Catalog Restore
SETRSTL	-	Set Restore Lock For Files

The remainder of this section defines the User Save and Restore directives in the order listed in Table 5-5.

User File Or Catalog Save Directive

FORMAT

SAVE catalog or file name,option(s)

REQUIRED

Qualified catalog or file name. If a catalog is named, files subordinate to it are considered for saving. A $ USERID or USERID directive must be supplied, giving the name and log-on password of the owner of the catalog or file. If a $ PRIVITY JCL statement is present, however, no user name need be given.

OPTIONS

1. LISTOPT/ { YES } /
   { NO }
   { NOSS }

   YES is assumed; if YES is specified (or assumed), names of all files saved are listed.

   If NO is specified, only the names of saved files that are write busy, abort locked, with defective space, or wholly or prtaially unreadable are listed.

   If NOSS is specified, the listing of the catalog and file names is suppressed during substructure processing. The listing of names of restored files is controlled by the YES/NO parameter.

2. DONTDO/catalog or file name,.../

   Specifies names of catalogs or files subordinate to the catalog named after the directive. If a catalog name is given, files subordinate to it are not saved.

SAVE OPTIONS (Cont'd.)

3. DOONLY/catalog or file name,.../

   Used to specify names of catalogs or files subordinate to the catalog named after the directive. If a catalog name is given, files subordinate to it are saved. Both DONTDO and DOONLY options cannot appear in one use of a directive, nor can either appear when the name given after the directive is that of a file.

4. SINCE/ { TODAY } , [time] /
          { date }

   Save only the files for the named user that have been written to since the date (and time) specified. Files that remain write-busy during the save are not saved when the SINCE option is used unless journalizing is specified for the file. Date is in the format mmddyy; time is in hhmm, hh:mm, or hh.hhh.

   The differenct between a SINCE and INCR save is as follows: The SINCE date and time can be that of the last total save so that incremental saves are accumulated into one SINCE save. Furthermore, only files for which INCRSAVE/YES/ is specified or assumed are saved using the INCR option while the SINCE option causes files to be saved regardless of the INCRSAVE specification. Both SINCE and INCR options can be used, but this is not often of value.

   A file is regarded as having been written to if the allocation was marked by IOS to show that at least one write was issued during the allocation, or, if on system restart, the file description shows that a write allocation to the file was interrupted by the system failure. A test mode allocation is not interpreted as a write allocation.

5. INCR

   Save only the files for the named user that:

   a. have INCRSAVE/YES/ specified or assumed for them

   b. were written to since their last save

   c. were not eliminated because of DOONLY, DONTDO, SINCE, or DEVICE option

SAVE OPTIONS (Cont'd.)

d. did not remain write busy during the save (unless journalizing is specified for the file).

A file is regarded as having been written to if the allocation was marked by IOS to show that at least one write was issued during the allocation, or, if on system restart, the file description shows a write allocation to the file to have been interrupted by the system failure. A test mode allocation is not interpreted as a write allocation.

6. DEVICE/ ONLY, device name,.../

Save only the files assigned to the named devices. Files assigned partially to devices named and partially to devices not named are saved entirely unless the optional word ONLY is present, or the file specifies duplication or journalizing. In such cases, only the portion of a file on a named device is saved. Catalogs are saved only if one of the devices names is ST1 (regardless of whether ST1 actually contains catalogs or not).

7. DEVICE/pack type,pack serial number/

Save only the files that are assigned to the specified pack (which must be mounted).

If the name of a file on a pack is given, that file is saved. In this instance, no DEVICE option may be supplied since a specific pack is implied by the use of the file or catalog name.

When a user has several level 1 catalogs on the same pack, the UMC can be named after the Save directive and the DEVICE/pack/ option given to specify that all files for the user on that pack are to be saved, subject to DOONLY or DONTDO constraints if these are given. This cannot be done when the UMC is itself on that pack, as indicated above.

SAVE OPTIONS (Cont'd.)

8. Move specified catalog structures and files from one user name to another user name. The user name of the qualified file name is changed to the new named user for all catalogs and files that are saved. No catalog names, file names, or passwords are changed.

   User identification for this option must be the same as that of the user name of the qualified catalog or file name being saved.

9. CHGNAM/unqualified name without password/

   The qualified catalog name being saved will be changed on the save tape to the new name specified in the option. Only catalogs subordinate to the UMC can be changed. No subordinate catalog names, file names, or passwords are changed.

10. STAK

    Save several file structures on the same tape. This option must be specified on the first save directive in the activity to indicate to the SAVE process that the save tape is not to be rewound before or after the SAVE process is executed.

    Normally, a save tape is closed with rewind; therefore, multiple save directives must not be used unless the STAK option is specified in the first Save directive. The STAK option processing is subject to the following conditions:

    - If the activity is not privileged, the appropriate USERID directive must precede the Save directive.
    - Any FILSYS directives can be interspersed among the Save directives, except Save and Restore related directives (e.g., SAVEMAST).
    - If the LISTOPT option is not specified in a Save directive, the default from the prior save is assumed.
    - All files must be in the same recording mode and density; however the files within the save tape need not all be save files because the STAK option, when used with the Restore directive, bypasses unrecognizable files.

SAVE OPTIONS (Cont'd.)

- o A $ GENFIL JCL statement should not be used in place of the $ TAPE JCL statement when using the STAK option.

Caution: Ensure that the tape is positioned correctly at the start of the save and that standard system format (File and Record Control) labeling procedures are used.

11. ESTAK

    Used only in conjunction with the STAK option to indicate the last of several save directives. The tape file is closed with rewind after the save is processed; otherwise, at the end of the FILSYS activity, termination processing acts upon the disposition as specified in the $ TAPE JCL statement.

12. BUSY

    If specified, a write busy status will not cause a file to be bypassed.

13. {DELPERMS}
    {DPERMS }

    Delete all general and specific permissions from the catalogs and files as they are being written to the save tape. The online catalog and file descriptions are not changed. In addition, the Creator Name field on the save tape is set to the USERID being saved or, if the NEWNAME option is in effect, to the new USERID.

    The DELPERMS option may only be used when the USERID from the $ USERID JCL statement or the FILSYS USERID directive is the same as the USERID being saved.

NOTES

1. If a file with code XS is present, it is written at the same time as the primary save file, file code PS. File PS can be assigned one unit or two to allow unit switching, depending on the number of volumes expected. If file XS is present, it should be assigned the same number of units as file PS.

NOTES (Cont'd.)

2. All content of space currently assigned to each file is saved, except that if the file description indicates the file has never been written to, no contents are saved. In no case, however, is a search made for an end of file mark to detect the last space written to.

3. If the catalog named after the Save directive is on a removable structured disk pack, the catalog and its subordinates (subject to DOONLY or DONTDO restrictions) are saved if the pack is mounted. Similarly, if a file is named after the Save directive that is on a removable structured disk pack, that pack must be mounted. However, if the catalog named after the save directive is on perm and the subordinates are on a removable device, the naming of the subordinates in a DONTDO or DOONLY specification will be regarded as erroneous, even if the pack is mounted.

   Files for the named user that are on nonstructured media - tapes or disk packs - are not saved whether or not the volume(s) are mounted.

   Files subordinate to a catalog on a removable structured disk pack are saved when the name after the Save directive is of that catalog.

4. System userids (i.e., those beginning with "SYS_") may be saved without special consideration, except for SYS_CAT. The SYS_CAT USERID can never be saved.

SAVE EXAMPLES

1. SAVE COROPRATE$SEPT25

   Catalogs and files on fixed devices for the user named CORPORATE are saved.

2. SAVE J.P.JONES/RMVBL,DONTDO/B/

   The catalog RMVBL for the user named J.P.JONES and all files and catalogs subordinate to it are saved, with the exception of the file whose full name is J.P.JONES/RMVBL/B. If B was a catalog, that catalog and any files and catalogs subordinate to it would not be saved. Because RMVBL is on a removable structured disk pack, all subordinates to it are also on that pack.

3. SAVE SALTRIVER,DOONLY/ONE,THREE/

   The catalog SALTRIVER and the two files ONE and THREE subordinate to it, but no others, are saved.

4. SAVE CLASS21,INCR,LISTOPT/YES/

   All catalogs for the user named CLASS21 and files for this user for which INCRSAVE/YES/ has been assumed or specified and that have changed since the most recent save are saved. A list is provided of all files saved.

5. SAVE SWEETWATER,DEVICE/DS1,DS2,DS3/,DOONLY/POWER/

   Any files subordinate to the catalog POWER with space assigned to any of the named devices are saved. If a file is partly on a named device, all of it is saved unless FMS journalizing is specified for it. No catalogs for the files are saved, because ST1 was not specified.

6. SAVE CLASS21,SINCE/070683/

   All catalogs for the named user and any files for this user that have been changed since the beginning of July 6, 1983 are saved.

7. SAVE ACE/POWER,NEWNAM/SWEETWATER/

   The catalog POWER for the user named ACE and all files and catalogs subordinate to it are saved as if they were subordinate to the user named SWEETWATER.

SAVE EXAMPLES (Cont'd.)

8. SAVE FLINK/CODE,CHGNAM/NEWCODE/

   The catalog CODE for the user name FLINK, and all catalogs and files subordinate to it, are written to the save tape as if they were saved from catalog NEWCODE.

9. SAVE ABC/CAT1,STAK,LISTOPT/NO/

   When using the STAK option as indicated in the following input stream:

```
USERID ABC$PABC
SAVE ABC/CAT1,STAK,LISTOPT/NO
LIST ABC/CAT1
USERID DEF$PDEF
SAVE DEF,DOONLY/CAT2,FILE1/
LIST DEF
USERID GHI$PGHI
SAVE GHI
LIST GHI
```

   - The first file on the save tape contains the structure and file content for the files subordinate to subcatalog CAT1 under user ABC. The LISTOPT/NO/ option overrides the FILSYS default and only errors will be reported.
   - The second save file, for user DEF, contains the substructure and content for FILE1 and all files subordinate to subcatalog CAT2.
   - The third file contains the substructure and file content for user GHI.
   - The LISTOPT/NO/ option from the first SAVE directive remains in effect for all the saves.

User File Or Catalog Restore Directive

FORMAT

RESTORE catalog or file name,option(s)

REQUIRED

Qualified catalog or file name. If a catalog name is given, all of its subordinate files are considered for restoring, subject to restrictions expressed by the options, if any. If a file name is given, only that file is restored. A $ USERID JCL statement or USERID directive must be provided with the name of the catalog owner or file name given, and with that user's log-on password. However, if a $ PRIVITY JCL statement is present, a user name or password need not be given.

OPTIONS

1. LISTOPT/ { YES } /
            { NO }
            { NOSS }

   If NO is not specified, YES is assumed; if YES is assumed or specified, the names of all restored files are listed.

   If NO is specified, only the names of files that are restored from a save marked write busy, abort locked, or with defective or unreadable content at the time of the save are listed.

   If NOSS is specified, the listing of the catalog and file names is suppressed during substructure processing. The listing of names of restored files is controlled by the YES/NO parameter.

2. DONTDO/catalog or file name,.../

   If a catalog name was given after RESTORE, names of catalogs or files immediately subordinate to it may be given to indicate that files subordinate to the named catalogs and named files are not to be restored.

3. DOONLY/catalog or file name,.../

   If a catalog name was given after RESTORE, names of catalogs or files immediately subordinate to it may be given to indicate that only files subordinate to the named catalogs and named files are to be restored.

RESTORE OPTIONS (Cont'd.)

Catalog or file names in the directive and in this clause must also be present in the save file to be restored; otherwise, the restore aborts.

4. SINCE/ { TODAY } /
{ date }

Restore only the files subordinate to the named catalog that are marked on the save as having been allocated or modified since the date specified. (Allocated means that a request to use the file was granted; modified means the file description was modified by means of a File Modify directive.) Allocation or modification after the save is not considered; only dates of last allocation and modification at the time of the save are considered. Date is given in mmddyy format.

5. DEVICE/device name,.../

Restore only the files that show in existing catalogs as being assigned wholly or partially to one or more of the named device(s). If contents reside on the specified devices, duplicate copies must exist on unspecified devices.

Only files that are in "restore-lock" status are restored; therefore, the specified devices must have been initialized before restore can take place. During the initialization, system master catalogs and user catalogs are restored, if required, and the files on the initialized device are set restore locked.

If an existing file description shows the file to be duplicated, the file content is restored from the duplicate and the one on the save is not used unless the duplicate file content is null or unavailable. A file description currently exists, however, only if catalogs are duplicated or a DEVICE restore is performed for device(s) that did not contain catalogs.

The whole file is restored including parts on devices not specified, if any. However, when FMS journalizing was specified for the file at the time of the save, only part of the file on specified device(s) is restored, because rollforward using journals can be relied on to update the part restored. If a duplicate of the file is available, only the part of it duplicating the part of the specified device(s) is restored. Refer to the GCOS 8 OS Integrity

RESTORE OPTIONS (Cont'd.)

Control manual for detailed information about rollforward processing.

6. NEWNAM/user name/

Move catalog structures and files from one user name to another user name. The user name of the qualified file name is changed to the new named user for all catalogs and files that are changed. No catalog names, file names, or passwords are changed. When the NEWNAM option is used, this directive requires privity.

The user identification of the user name of the qualified file name of the save must be used with this option. If the NEWNAM option was used on the save but not on the restore, then the user identification of the user name of the qualified file name being restored should be used as in a normal restore.

7. RESET/ { RFILES } /
{ DENIED }

RESET/RFILES/ sets the file restore indicator in the OFF position. (In the normal condition, the file restore indicator is in the ON position.)

The RESET/RFILES option applies only to the files that are not already present in the system. This option forces the program to set the file restore indicator in the OFF position. Care should be exercised when using this option because it may prevent the file from being saved on a subsequent since type of save.

During a user restore, use of RESET/DENIED/ results in the following:

a. The logic is bypassed that compares the original save tape number with the current tape number in the File Description (FD) record.

b. The logic is bypassed that compares the ordinal number of the file on disk with the ordinal number of the saved file on tape.

This option should prove helpful in instances where a restore lock is preventing a user restore.

RESTORE OPTIONS (Cont'd.)

8. RESET/ {DEVICE } /
{DN1 [,DN2] ...}

Remove all constraints either from files being restored, if device name or device class was specified, or from files restricted to specified device names, if device name was specified (refer to Notes 14, 15, and 16).

9. RENAME/ {ALL } /
{DN1 [,DNK] ...=DNA [,DNB] ,...:....}

The files that are constrained to any device specified to the left of the equal (=) sign are reassigned to the devices right ot the "=" sign. If ALL is specified, any files with a device name constraint are reassigned (refer to Notes 14, 15, and 16).

10. RENAME/ {ALL } /
{CL1 [,CLK] ...=CLA:...}

Unlike the previous option, only one device class can be specified to the right of the "=" sign (e.g., CLK=MSU450...).

11. RESET/NEWDEV/

Used only with the RENAME option. Every file that either has no constraints or has the same constraints as specified in the RENAME option is eligible for reassignment.

12. VERIFY/ { YES } /
{ NO }

If YES is specified, the write command and the VERIFY option are used when the catalog structure and file content are written to disk.

NO is assumed; that is, only the write command is used if the VERIFY option is not specified.

13. STAK

Alerts the restore function to the possible existence of multiple files and non-save files on the input save tape. The restore searches the tape for a save task header block containing the userid to be restored. This option need only be specified in the first Restore directive in the activity.

RESTORE OPTIONS (Cont'd.)

No more than one Restore directive should be used in a given activity unless the STAK option is used to process a stacked save tape. Options such as DOONLY or DONTDO should be used instead. If multiple restore directives are used and the activity is processing a multireel volume containing "save" information, the operator must remount reel 1 for each directive. If alternate logical unit designators are used in the $ TAPE JCL statement, it is likely that initiate interrupt eerors will occur since unit switching logic uses the rewind/standby command.

Multiple Restore directives are allowed in a single FILSYS activity when the STAK option is specified, subject to the following conditions:

- If the activity is not privileged, the appropriate Userid directive must precede the Restore directive.
- The restore search logic only searches forward through the save tape; therefore, the Restore directives must be input in the correct sequence.
- If the LISTOPT option is not specified in a Restore directive, the default of the prior restore is assumed.
- If the RESET DEVICE, DENIED, or RFILES options are specified, they remain in effect for all the subsequent restores in the activity.
- If multiple saves are stacked for the same Userid, restore processes each save task block and substructure until a save is encountered that fulfills the restore request. A report is produced for save-header analysis with applicable diagnostics for each save that does not fulfill the request.
- When the STAK option is in effect, the files skipped on the save tape are indicated on the error report by one of the following messages:

  FILE nn SKIPPED: USER x...x

  FILE nn SKIPPED: USER *UNK*

  where:

  UNK - not recognizable as a save tape

RESTORE OPTIONS (Cont'd.)

Conveniently, the user site can determine the sequence and use of files on the save tape by requesting a restore for a userid that is <u>not</u> on the tape. (Of course, the userid must exist in the system, since the FILSYS validates the Restore directive.)

- o A $ GENFIL JCL statement should not be used in place of the $ TAPE JCL statement when using the STAK option.

14. RSTL

Allows only files in "restore lock" status to be restored. Use this option in a restart condition after a failed restore.

NOTES

1. If a file is specified on the RESTORE directive, the DONTDO, DOONLY, and SINCE options are inapplicable, and an error is returned if they are specified. Both DONTDO and DOONLY options cannot be submitted in one use of the directive. Any other combination of options is possible. However, it is obvious that only files that are contained on the present save(s) can be restored. If there should be no files both satisfying the selection criteria imposed by the restore options and contained on the presented save, an error is returned. An example is a save done under a device option that does not include any of the devices specified in the restore option.

2. For a user restore, currently existing catalogs, file descriptions (having same names, create dates, and ordinal numbers as those on saved tape), and file content space are used when available. Only when there is no currently existing catalog or file description for a file to be restored is the catalog or file description from the save used. When the currently existing catalogs are used, the following adjustments are made:

   a. The date and time of last write to a file recorded in the file description for the file is changed to the one in the saved file description.

   b. If the restored file content is larger than existing file content space, more space is obtained up to the maximum specified in the existing file description.

3. When the currently existing file or catalog is not the one that is wanted, it must be deleted prior to the restore. This will cause the catalog and file description from the save to be used and new file content space to be assigned. If both the saved and existing versions are desired, the name of the existing version may be modified prior to the restore to prevent it from being replaced by the saved version. If the currently existing file is not deleted by the user and create dates and file ordinal numbers are not the same, then the file is not restored, unless the RESET/DENIED/ option is used. A report is made of this condition for the required user action.

   Similarly, if an existing "IDS" file is restored, the attribute block is not updated from the save tape. If the existing attribute block and the attribute block on the save tape differ in attributes, such as page number or page size, the file must be deleted before it is restored to avoid discrepancies between the file content and the attribute block.

NOTES (Cont'd.)

4. Because an existing version of a file description will be used, the user can decrease the size of the file or cause the file to be duplicated. These changes to the version on the save can be effected by modifying existing files and then restoring them.

5. Device specifications in the currently existing file description or subordinate catalogs are used to control where the file is assigned. If there are no existing file description and catalogs, though, the specifications, if any, at the time of the save - either in subordinate catalogs or in the file description - the file description must be in existence at the time of the restore.

   If space is not available on specified devices, the file is not restored, and a report is made in case the specifications have to be changed or space made available on the devices.

   Files restored from a device save are assigned space only on devices saved for on this save. For example, if the save included the option DEVICE/DS1,DS2/, a restore from this save assigns space only on DS1 and DS2. With these device assignments, the installation can continue to use a device save taken prior to the restore when another restore is needed. The device save for DS4, DS5, and DS6, for example, can be used to restore from a failure of DS4, because no file will have been restored to DS4 that is not saved on the DS4, DS5, and DS6 save.

   When restoring from a device save, the first restore must be performed from the ST1 device save. The catalogs are always contained on the ST1 device save and are the first file structures to be restored. After the catalogs are restored, restoring can be effected concurrently from the other device saves. If restoring is attempted from another device (not ST1) before the catalogs are restored, no restoring occurs.

   The restrictions on a device in which files can be restored - both those resulting from specifications in catalogs on the save tape, and those required because the restore is from a device save - can be removed by use of the option RESET/DEVICE/.

   No space is released when a device restore is performed. It is assumed that if a new pack is provided for the device, it will have been initialized.

NOTES (Cont'd.)

If no specifications - either in existing or saved catalogs - control device assignment, the restore uses the assignment procedure used at file create that assigns space on any devices with a suitable allocation unit and available space.

6. If no file description exists for the file and the saved version specifies duplication, space for both original and duplicate is assigned, using device specifications for both original and duplicate, if any, in the save file description. Then the saved version is written to both spaces.

   If the saved file description specifies duplication but an existing file description for the file does not, only one write of the file content occurs since the existing file description controls the restoring.

7. If the restore is from a save done under the DEVICE/pack/ option, references on fixed devices to catalogs on the restored pack are not created when they do not currently exist.

8. Restoring from save(s) performed under the INCR option requires that the user present the most recently performed incremental save first, then less recently performed saves in reverse chronological order, and finally a total save.

   File restoring is under control either of currently existing catalogs or the catalogs on the first presented incremental save. Only the most recent version of the file content for a file is restored.

9. Restoring from save(s) performed with the SINCE option similarly requires use of the most recent save first, less recent saves (if any) next, and finally a total save.

10. If a file was abort locked or had defective or unreadable space at the time of the save from which it is restored, the file description is marked to show that the file is abort locked or has defective space. If the currently existing file description is so marked, the indication is removed unless the save is also so marked. A report is made of any such exceptions in case earlier saves are to be used or recovery action initiated or discontinued.

RESTORE NOTES (Cont'd.)

11. Saves done under INCR or SINCE options are not made while the file is write busy unless journalizing is specified for the file. Files restored from saves not done under these options, however, can be made while the files are write busy even though journalizing is not specified for them. A report is made of restores for the user of such files in case a restore from an earlier save is to be performed or recovery action initiated, and the file description is marked abort locked if any ABORT option is specified.

12. A restore uses a save produced by either a user save or an installation SAVEMAST. Presumably, only the installation has access to the saves produced by SAVEMAST so that user restores from such saves can be made on request.

13. The date and time of the last write to the file at the time of the save from which the file is restored is set as the date and time of last change to the file. Hence it can be relied on to indicate the version of the file content provided by the restore.

14. If the three options RESET/DEVICE, RENAME/, and RESET/NEWDEV are all used, every file is eligible for reassignment.

15. New constraints remain on the file until they are changed by a subsequent SAVE and RESTORE.

16. The options for the RESTORE directive are effective for any RESTORE, when the files do not exist already in the system, but do not apply to removable structured packs.

17. If the user restore is run with privity, the specified structure and content will be restored, even if space required exceeds the limit in the USERID's master catalog entry. The limit is not changed; it is ignored.

18. Any system userid (i.e., those beginning with "SYS_") may be restored without special considerations, except for SYS_CAT which can never be restored.

EXAMPLES

1. RESTORE CORPORATE$SEPT25,DONTDO/CUSTOMER/,
   LISTOPT/YES/

   All files for the user named CORPORATE, except the file named CUSTOMER, are restored. A listing of restored files is provided. If CUSTOMER was a catalog, files subordinate to it are not restored. Catalogs and file descriptions are restored and file spaces assigned only if those do not exist at the time of the restore; otherwise, the existing catalogs, file descriptions, and file spaces are used.

2. RESTORE CLASS21/PROB1INPUT

   The file PROB1INPUT cataloged under the user named CLASS21 is restored. If the restore is from a save that used the NEWNAM option, then the user identification must be the same for CLASS21 as in a normal restore.

3. RESTORE INSTALL/SYSA,DOONLY/ACT,EQUIP,PERS/

   The three files named ACT, EQUIP, and PERS subordinate to the catalog INSTALL/SYSA are restored.

4. RESTORE CLASS21,SINCE/070683,1200/,LISTOPT/YES/

   Files for the user named CLASS21 that at the time of the save had been allocated or whose file descriptions had been modified since July 6, 1983, are restored and a list is provided of each that is restored.

5. RESTORE J.P.JONES/RMVBL

   Files subordinate to the catalog RMVBL for the user named J.P.JONES are restored. These files are on a structured removable pack that must be mounted at the time of the restore.

6. RESTORE SALTRIVER,NEWNAM/CORPORATE/

   All catalogs and files are restored to the user named CORPORATE. The user identification for SALTRIVER should be used.

7. RESTORE RESET/DEVICE/

   The files restored have all constraints removed and are placed on those devices with the most space available.

RESTORE EXAMPLES (Cont'd.)

8. RESTORE RENAME/DS1-DS2,DS3:DS4,DS5=DS6/

   The files restored that are constrained to DS1 will be constrained to DS1 and DS3. The files restored that are constrained to DS4 and DS5 will be constrained to DS6.

9. RESTORE RENAME/MS0450=MS0500/

   The files restored that are constrained to device type 450 will be constrained to device type 500.

10. RESTORE RENAME/ALL=DS2,DS3/

    All files restored that have device name constraints will be constrained to DS2 and DS3.

11. RESTORE RENAME/ALL=DS2,DS3/,RESET/NEWDEV/

    All files that are restored and do not have device class constraints will be constrained to DS2 and DS3.

12. RESTOREMAST RENAME/ALL=DS2,DS3/,RESET/DEVICE/,RESET/NEWDEV/

    All files that are restored will be constrained to DS2 and DS3.

    NOTE: In examples 7 through 12, the options only apply to restored files that did not previously exist in the system.

Set Restore Lock User Directive

This directive causes the FILSYS program to examine catalog structures and mark files with an extent on specified devices restore locked.

FORMAT

SETRSTL [VOLSET/volset name/,] DEVICE/dv1[,dv2,...]/

REQUIRED

The DEVICE option is required.

OPTION

VOLSET/volset name/

If the VOLSET option is specified, the search for files to be restore locked will be limited to the specified volume set. Device names specified in the DEVICE parameter must be members of the volume set.

If the VOLSET option is not specified, the PERM structure will be examined.

GCOS ACCOUNTING

AND

ABNORMAL TERMINATION PROCESSING

EXECUTION REPORT EXAMPLE

ACCOUNTING INFORMATION

The accounting information for an activity is produced during termination of that activity. It consists of information supplied in the following form:

- Execution Report
- Statistical Collection File

The lines on the execution report are described in this section. The binary accounting cards are described in the System Tables reference manual.

EXECUTION REPORT

The format of fields on the execution report is given in Figure B-1. Since the actual content of the execution report can vary depending on the type of program, the execution report pictured in Figure B-1 is only to illustrate the locations of the various executive report fields.

EXECUTION REPORT OUTPUT

ABORTS: Abort message texts and/or reason codes appear in place of the NORMAL TERMINATION portion of the termination message following the J* (control card) file listing.

DELETES: Messages giving the reasons for deletes by the System Input program are imbedded in the J* file listing.

All other GCOS delete messages appear following the J* listing.

EXECUTION REPORT EXAMPLE

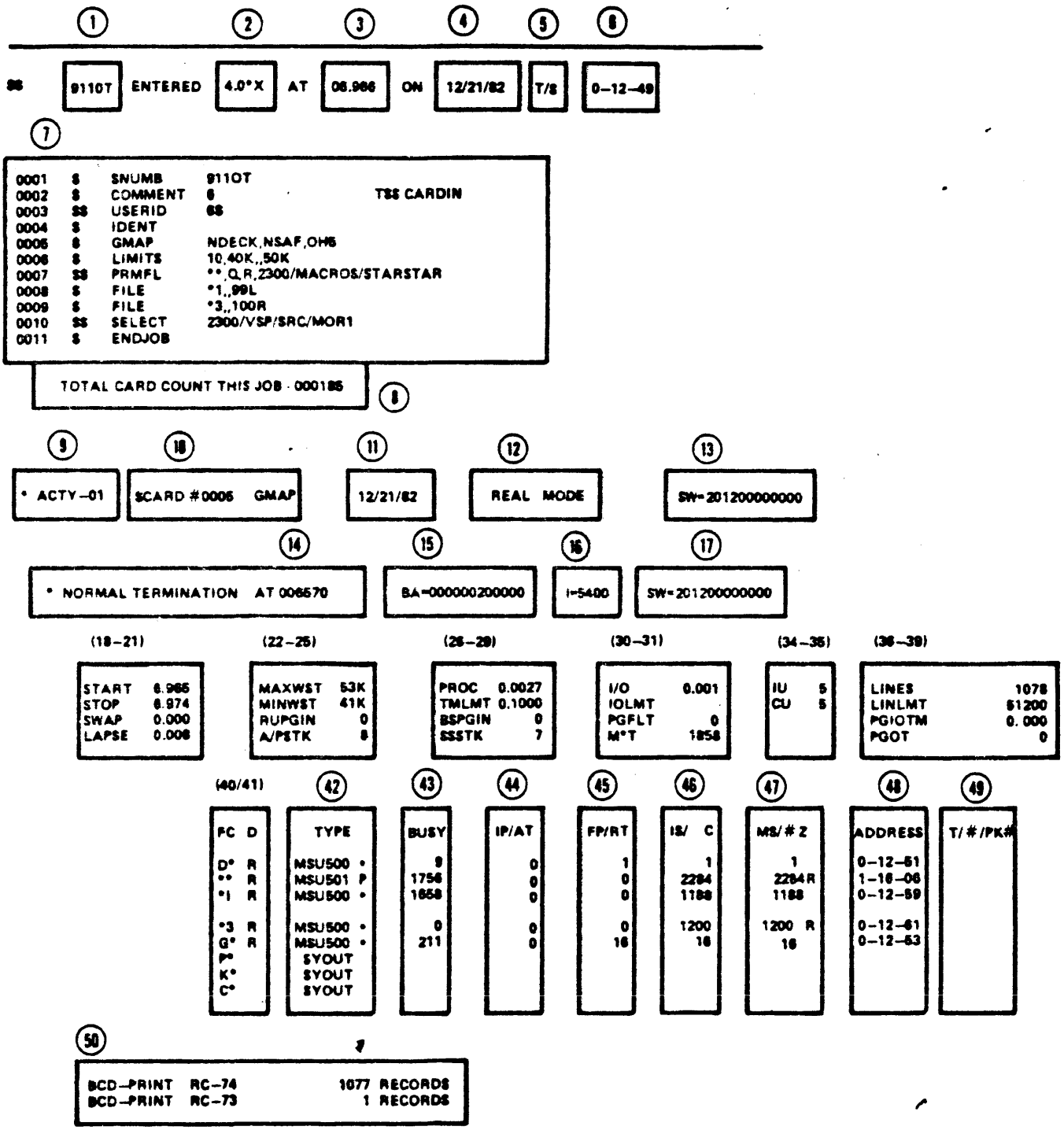

EXECUTION REPORT EXAMPLE

EXECUTION REPORT FIELDS

INDEX	DEFINITION
1	SNUMB (i.e., job number)
2	System Identification contains the six alphanumeric characters entered by the site administrator on the $ SYID Startup statement
3	Time of day job entered system (in hours and thousandths of an hour)
4	Date job entered system (mm/dd/yy)
5	Input source (RDR, IMCV, REMOTE, SPAWN, TSS)
6	I/O Multiplexer (i.e., IOM or IOX) number, channel (CH or PUB) number, and device number of input device.
7	JCL statements used in the job. Each activity definition statement is marked by "A" immediately preceding the $ symbol. If the program contains an object deck, both the $ OBJECT and $ DKEND statements appear in the JCL statements list.
8	Total statement count for this job
9	Activity number within job
10	Activity type (GMAP compile, CONVER, COBOL compile, GELOAD execution, etc.). The $ CARD field indicates the location at which the activity started.
11	Month/Day/Year activity started
12	Single segment (real) mode/Multisegment (virtual) mode
13	Status of program switch word at the beginning of activity
14	Location at activity termination
15	Base address of instruction segment
16	Contents of processor indicator register bits 18-29 at termination

EXECUTION REPORT EXAMPLE

EXECUTION REPORT FIELDS

INDEX	DEFINITION
17	Status of the program switch word at the end of the activity
18	Time activity started (in decimal hours)
19	Time activity stopped (in decimal hours)
20	Total time activity was swapped out of memory
21	Elapsed time (STOP minus START) (in hours and thousandths of an hour)
22	Maximum working set (memory) allocated to this activity, excluding control area
23	Minimum working set (memory) allocated to this activity, excluding control area
24	Number of Page-ins from virtual mode run unit
25	Size of Argument/Parameter stack segment (in K)
26	Processor time in decimal hours
27	Limit on processor time for this activity in decimal hours
28	Number of Page-ins from backing store
29	Size of Safe-store stack segment (in K)
30	I/O time for this activity in decimal hours
31	Limit on I/O time for this activity in decimal hours. If this limit is not specified on the $ LIMITS JCL statement, the I/O time is not limited and this field is blank on the execution report
32	Number of Missing-page faults
33	Product of memory and time (in thousand word-seconds)

EXECUTION REPORT EXAMPLE

EXECUTION REPORT FIELDS

INDEX	DEFINITION
34	Initial job urgency
35	Current urgency
36	Number of SYSOUT records output for this activity
37	SYSOUT record limit for this activity
38	Channel time used in page I/O
39	Number of Page-outs
40	File Code (FC)
41	Disposition code: R - Release S - Save D - Dismount C - Continue This entry identifies the type of device that contains the data file.
42	Device type according to the following list. Symbols *, P, S, or X to the right of the device type indicates a System Input-created data file (*), a cataloged permanent file (P), a secondary file (S), or a removable file (X).

Device Type	Device
MSU0400	MSS0400/MSU0402 Mass Storage Subsystem Removable Mass Storage Subsystem Removable
MSU0450	MSS0450 Mass Storage Subsystem - Removable
MSU0500	MSS0500 Mass Storage Subsystem - Removable
MSU0501	MSS0501 Mass Storage Subsystem - Removable
TAPE	Magnetic Tape Subsystem
TAPE-7	Seven-Track Magnetic Tape Subsystem
TAPE-9	Nine-Track Magnetic Tape Subsystem
READER	Card Reader
PUNCH	Card Punch
RD/PUN	CCU0401 Reader/Punch
PRINT	Printer

EXECUTION REPORT EXAMPLE

EXECUTION REPORT FIELDS

Device Type	Device
PPT	Paper Tape Subsystem
CONSOLE	System Console (CCS6001/6002/6004/6005/6601)
SYSOUT	SYSOUT Function of GCOS software (Device - Independent)
DAC	DAC function of GCOS software

INDEX	DEFINITION
43	Amount of time the channel was busy. If ≤ 999999, time is in milliseconds. If > 999999, time is shown in hours and decimal-functions of an hour (e.g., 1,2345), a "p" following an entry in this column indicates a purged file.
44	For mass storage devices, this field specifies the initial position (initial relative llink position) of the access; for a unit record device, the Allocation Time (AT) for the device. For a magnetic tape subsystem, this field is blank or contains the channel address of an alternate magnetic tape device.
45	For mass storage devices, FP describes the final position of the file (final relative llink position) from the start of the access, if available. If not available, this field contains NA (Not Available). For magnetic tape devices, FP describes the final file position in the form r/ff, where ff is the number of files passed and r is the number of physical records passed. If the form is r/ff, ff is the number of files passed, and r is the number of physical records back-spaced in front of the last end-of-file. For unit record devices, this field (RT) defines the release time.
46	For a mass storage device, IS contains the initial size of the file in llinks. For a unit record device or magnetic tape unit, #C contains the number of connects for the device.

EXECUTION REPORT EXAMPLE

EXECUTION REPORT FIELDS

INDEX	DEFINITION
47	For a mass storage device, MS contains the final size in llinks for the file. For a unit record device or magnetic tape unit, #E the number of errors in the access.
48	Device address in the form IOM (or IOX) number - channel number - device number
49	T#/PK# contains the tape reel number (T#) or pack number (PK#). For a magnetic tape unit, this field contains the File Serial Number (FSN) of the tape. When the FSN field of a tape reel matches the FSN field of the $ TAPE JCL statement (or the tape was a scratch reel), a # symbol precedes the FSN reported here. If the FSNs do not match at the start of an activity, a > symbol precedes the FSN reported. For removable mass storage, this field contains the pack number. For a removable disk pack (X following device type field) this field, on the line below the device definition line, contains the pack number followed by a field indicating whether the disk pack was online (ONL) or had to be mounted (MNT).
50	System output list which is composed of: Output type - BCD-PRINT BCD-PUNCH ASCII-PRINT ASCII-PUNCH Report code Record count Destination - blank (= online) or STA-dd

.MBRT7

This site prepared module contains the site's billing algorithm. .MBRT7 can be developed to calculate, accumulate, and append SCF billing information to the execution report.

EXECUTION REPORT EXAMPLE

SPECIAL ACTIVITY OUTPUT

GCOS service functions have the ability to write data on the execution report for the program containing that service function. The most common service functions that write data on the execution report are the label processing function of File and Record Control, and the printer button interface and $ MULTI card functions of the Bulk Media Conversion (BMC) program. The data is printed on the execution report between the line describing the activity and the line describing the activity termination.

BMC ACTIVITY OUTPUT

A BMC (CONVER) activity can output the following on the execution report for the program containing the activity:

- Record of printer push-button operations on the printer dedicated to the BMC job.
- Record of file manipulations caused by a $ MULTI card in the program.
- Other messages as described in the Bulk Media Conversion manual.

The printer control operation report may include any of the following messages:

```
FORWARD SPACE TO TOP OF PAGE
INVALID LINE
OPERATOR RESTARTED THIS REPORT
OPERATOR KILLED THIS REPORT
BACKSPACE TO TOP OF PAGE
BACKSPACE
```

EXECUTION REPORT EXAMPLE

SPECIAL ACTIVITY OUTPUT

For each entry on the $ MULTI card, BMC indicates the number of records input from a file or the number of records with a specified report code. These entries take the following form:

```
FILE#nnnnnn RPT CODE cc xxxxxx IGN yyyyyy

                    or

FILE#nnnnnn TOT xxxxxx INPUT
```

where:
- nnnnnn - File number
- cc - Report code (File and Record Control report code)
- xxxxxx - Number of records used as input
- yyyyyy - Number of records ignored

EXECUTION REPORT EXAMPLE

SPECIAL ACTIVITY OUTPUT

To initiate the activity, the console operator enters a RUN nn verb for the dismounted reel. The requirements for this verb gives the operator control of the number of active spinoff jobs in the system and of the sequence in which they are to be run. The tape dismount may prevent unnecessary commitment of tape resources while waiting for a printer or card punch.

The following is a sample console log for this type of spinoff operation:

```
        *SRT SSSSS-Ø1 11.931 GMAP (Ø4Ø)

    *DMT Ø-16-Ø3 REEL #23558 S# SSSSS-Ø2 TO 494ØS B-M-C

REMOVE OUTPUT SSSSS-Ø4 FROM PRINTER # Ø Ø9

        *EOJ SSSSS-Ø5 11.942

    *GET S#494ØS TAPE#494ØS SPINOF-SSSSS

???RUN 494ØS

    *MEDIA--S#494ØS-Ø1 MNT Ø-Ø2-ØØ #23558 SPINOF-SSSSS 11.947

        *SRT 494ØS-Ø1 11.949 CONVER (Ø8Ø)

REMOVE OUTPUT 494ØS-Ø1 FROM PRINTER # Ø 2Ø

        *EOJ 494ØS-Ø1 11.953
```

In this example, SSSSS is the parent job and 494ØS is the spawned job. The message gives the operator more information and control of the activity.

ABNORMAL TERMINATION PROCESSING

Because it would be inpractical to give extended, detailed information about all possible causes of the errors in this appendix, the programming messages and abort codes manual should be consulted concerning all abort codes and messages.

ABNORMAL TERMINATION PROCESSING

ACTIVITY/JOB ABNORMAL TERMINATION

Abort codes, error codes, and error messages are issued to the user's execution report to identify conditions that caused abnormal termination of an activity of job.

Abnormal termination may be caused by:

1. GCOS software-detected errors
2. Operator ABORT requests from the system console or time sharing user terminal
3. Hardware-generated faults
4. Slave program requests via MME GEBORT

Occurrences of any of these conditions causes an immediate interruption of activity processing. All I/O requests for which the connect was not issued are lost; however, those I/O requests for which a connect was issued are allowed to terminate normally.

The location of the fault or error and the abort reason code are placed in word 11 (octal 13) of the salve program prefix. An *ABT... or *END... message is output on the system console. If bit Ø of the program switch word is set, a dump is produced. If word 23 (octal 27) of the slave program prefix contains a wrapup address, word 23 is cleared and the user is given control at that address. (This word is normally initialized by the .SETU routine, if an Execute activity.) After a wrapup is completed, bit 12 of the program switch word is examined and, if set, a Utility subactivity is executed. (See "Wrapup Routine Processing" and "Abort Subactivity Processing" in this section.) Upon return from the subactivity, the Statistical Collection File (SCF) and execution records are produced and peripherals and memory are released.

If termination was not initiated by an ABORT request and a $ ENDJOB was not the activity delimiter, the job is returned, with an abort indicator set, for subsequent activity allocation. In this instance, only subsequent language processing activities (GMAP, FORTRAN, etc.) are scheduled for allocation until a $ BREAK JCL statement is encountered (at which time, normal activity scheduling is resumed). The conditional JCL statements $ BREAK, $ GOTO, $ IF, $ SET, and $ WHEN along with the $ LABEL JCL statements may be used to explicitly control conditional activity execution. (The use of conditional JCL statements is described in the GCOS 8 OS Job Control Language manual.

Abnormal Termination During Allocation

When the first pass through the salve job control (J*) file is completed, a test is made to determine if errors were found during allocation. If so, the job is deleted, a delete (*DLT xxxxx (reason)) message is sent to the system console and an explicit reason for deletion is printed on the execution report.

When a job is returned for allocation after at least one activity was successfully executed and no subsequent activities are executable (possibly because of compile errors or activity abort), a *END sssss message is sent to the system console.

If a hardware malfunction or unusual job stream causes a fault during allocation, a *TILT, *DLT S# sssss message is sent to the system console. A dump of the Peripheral Allocator (Program. #2) is produced on printer PR2, if dedicated, or on the Statistical Collection File if PR2 is not dedicated. A JOB DELETED message is printed on the execution report and the job is deleted.

GCOS Software-Detected Aborts

On a GCOS software-detected abort, the Instruction Counter (IC) and reason code are stored as before, the IC and Indicator (I) are set in word 18, and the Instruction Segment Register (ISR) is set in words 32 and 33 of the slave program prefix (SPX).

Operator-Initiated Aborts

If termination was initiated by an ABORT... request from the system console, the job is terminated as though a $ ENDJOB followed.

MME GEBORT Terminations

In the case of MME GEBORT-initiated aborts, the user program supplies only the reason code. The IC and reason code are inserted into word 11 (octal 13) of the SPX as follows:

Word 11	Bits	00-17	IC
		18-23	40
		24-35	Reason code

Words 32-33 (octal 40-41) - ISR of first abort

JROLL Recovery Option

To prevent slave mode programs from abnormally terminating due to transient problems, slave mode program abort recovery is provided through the JROLL option specified on the user's activity-defining JCL statement. The JROLL option provides a rollback to a previous checkpoint where processing then resumes.

USER OPTIONS DURING ABNORMAL TERMINATION

When an activity terminates abnormally (either via a MME GEBORT or abort), any, all, or none of the following user options may also be exercised:

- Dump (only if requested by a JCL statement specifying the dump option, or by a MME GESETS)
- Wrapup (which may also terminate normally or abnormally)
- Abort subactivity (which may terminate normally or abnormally)

The system console log shows the first abort code; the execution report shows the codes in the order in which they occurred.

Dump Option Processing

A dump of slave memory area contents is not routinely provided; it occurs only is explicitly requested by the console operator or the user. A user may request a dump of the aborting activity's memory in either of two ways:

1. By specifying the DUMP option on the activity defining JCL statement.
2. By using a MME GESETS or other means (e.g., $ SET JCL statement, perhaps in conjunction with other conditional JCL statements) to set bit Ø of the program switch to word 1 (ON).

The dump is written to the System Output File (P*) if it is assigned to SYSOUT, a printer, or a disk sequential file (temporary or permanent). If P* is assigned to another device type (e.g., tape or a random file), the dump is sent to SYOT for inclusion in the execution report. If an execution report is not prepared, the dump is output either to a dedicated PR2 printer or to the Statistical Collection File (SCF).

DUMP OPTION PROCESSING (Cont'd.)

Normally, the output is in BCD format, including the appropriate slew codes and the embedded formatting characters. The only exception is that the data segments are passed to SYOT in large blocks of memory raw data with appropriate address controls for eventual processing by GEOT or JOUT.

If P* is assigned to a permanent file, the file should be large enough to contain the whole dump and the wrapup dump. Generally, the ratio of words on disk to words in memory is 3 to 1.

The dumped segments are processed in the following sequence:

1. History Registers - If the fault was detected by the hardware and the history registers were preserved, the register contents are dumped first in octal format, then again in a logical operation sequence (output of registers is dependent on processor type).

2. Fault Registers - The safestore frame saved at the time of the abort is formatted for output. (Also, included are the Working Space Registers.)

3. Standard Segments - The segments PUSH, EPD, USL, S/S, PTØ, AP, DCW, PAT, SYT, SSA, and SPX, which are defined by the system to support the process, are dumped (see GCOS 8 OS System Tables manual for additional information).

4. Dump Option - If this option was used in the process (bit Ø of switch word is set to 1) the slave memory is dumped (see GCOS 8 OS System Operating Techniques manual for detailed information).

Wrapup Routine Processing

Wrapup, which is a user option, is not intended as a means of returning to the normal processing flow following an abort. Instead, it is typically used to provide a "cleanup" facility for file protection and message output following an abort. A wrapup opportunity is not provided for an activity that terminates normally.

WRAPUP ROUTINE PROCESSING (Cont'd.)

The support environment provided for certain types of activities (such as COBOL, I-D-S, or ISP program executions) often includes a system wrapup routine. However, if desired, the user can also elect to append a wrapup routine to that provided by the system. If so, the user must:

1. Save the address of the system wrapup routine.

2. Put the address of the user wrapup routine in word 23 (octal 27), bits ØØ-17, of the slave program prefix.

3. After the user's wrapup routine successfully executes, restore the address of the system wrapup routine (in word 27 (octal) of the slave program prefix) and transfer to that routine.

If desired, the system wrapup routine may be completely preempted by eliminating steps 1 and 3 and ensuring that the wrapup routine terminates in a MME GEFINI.

Abnormal Termination Of Wrapup

If abort occurs during wrapup, only a dump of the control area (same as for NDUMP) is automatically generated, unless the wrapup routine sets the dump options in the switch word. Word 12 (octal 14) has the same format as word 11, except for wrapup abort; word 19 (octal 23) contains IC and I of wrapup abort; and words 34 and 35 (octal 42 and 43) contain ISR of wrapup abort.

If more termination information is desired, a slave memory dump may be obtained by including a MME GESNAP in the program, followed by a MME GEFINI. (A panel dump will also be taken.) The MME GESNAP calling sequence includes the amount of slave memory to be dumped. It should be noted, however, that if a dump is desired, it must be done during wrapup. The user is allowed the balance of the time specified (or implied) on the $ LIMITS JCL statement, plus 3Ø seconds for wrapup.

The dumps are written on the P* file if this file is assigned to SYSOUT, or to a printer. Any other assignment of P* causes the dump to be written on the execution report. If an execution report is not prepared, the dump is output either to a dedicated PR2 printer or to the SCF.

Abort Subactivity Processing

An abort subactivity can be specified via a $ ABORT JCL statement in the program input job stream. The subactivity will be initiated only if the associated activity terminates abnormally and sufficient memory is available for the utility program. If sufficient memory is not available, the program will receive an M4 system abort.

An abort subactivity may be used to perform file manipulation such as a file dump and a file copy (see $ ABORT JCL statement in the GCOS 8 OS Job Control Language manual). Subactivities execute after wrapup is performed. If the abort suabactivity undergoes abnormal termination, a wrapup may result; a dump does not occur. File codes of the files being serviced and the requested action are indicated through use of the $ FUTIL JCL statement.

If an abort subactivity was specified, the following message will appear on the execution report:

*UTILITY CALLED

Time Limits For Dump, Wrapup, And Abort Subactivity

The maximum time allowed for the Dump, Wrapup, and Abort subactivity options (including any associated dumps in the case of wrapup and abort subactivity) is the time specified or implied on the $ LIMITS JCL statement plus 30 seconds for each wrapup and/or abort subactivity.

Program Disaster

If a fault or other GCOS software-detected error occurs during the activity termination process, the termination is suspended and the message "PRCSS #nnn DISASTER s#ssssss" is issued to the system console. A dump is then printed on a dedicated PR2 printer if one is available or, if not, the dump goes to the Statistical Collection File (SCF). Termination is stopped, no files are released, and the termination procedure is not completed.

If this type fault occurs, it may eventually result in a system failure.

Exception Processing Abort Data

Under the following abort conditions, the Exception Processing program stores information in words 40 through 43 (octal 50 through 53) of the slave program prefix:

1. The operator responded A (abort) to an Exception Processing program error message.

2. The error for which the Exception Processing program is aborting the program is an IOM error (channel or IOM central).

3. The console operator requested rollback.

The four words of data are:

Words 40-41 (50-55) - Descriptor for I/O command block

Word 42 (52),	Bits	00-06	Device command
		07-16	Reserved
		17	Abort
		18-35	Reserved

Word 43 (53),	Bits	00	=1, status loaded
		01	=1, power off
		2-05	Major status
		6-11	Substatus
		12-15	Reserved
		16	=0, Terminate Interrupt =1, Marker Interrupt
		17	=1, Exception Processing program could not recover
		18-20	IOM channel status
		21-23	IOM central status
		24-35	File code

APPENDIX C

PERIPHERALS

INTRODUCTION

The CRU0600/CRU1050 Card Readers (Figure C-1), available for Series 60 system use, are self-contained devices that utilize a photoelectric system for data sensing. They have the capability of reading 80-column cards in Hollerith mode (80 characters per card) or in Binary mode (160 characters per card) at the maximum rate of 600 or 1050 cards per minute. with Option CRF0003 installed, 51-column cards can be read. The card readers on Level 62 and 64 have the added capability of reading mark sense cards in HIS (Honeywell) or IBM mode with the installation of Option CRF0004 or CRF0005 in 80-column of 51-column (51-column if Option CRF0003 is made available). All options offered can be installed in the field by Honeywell field engineering personnel.

A device adapter, containing logic circuits for controlling card movements and translating character formats, is built into each reader. Table C-1 defines the standard and optional capabilities and characteristics of the card readers.

PERIPHERAL PERFORMANCE

The card reader hopper capacity is 3000 cards and the stacker capacity is 2500 cards. The stacker is provided with an offset capability. The difference between the card readers is their operating speeds: CRU0600 reads 600 cards per minute (CPM) and the CRU1050 reads 1050 cpm.

Both models have the same dimensions:

Height: 39.6 in.(101 cm)
Width: 30 in(7.62 cm)
Length: 45 in.(114 cm)
Weight: 575 lbs.(260 kg)

INTRODUCTION (Cont'd.)

TABLE C-1. STANDARD AND OPTIONAL CARD READER FEATURES

		Card Reader
Standard Capability:	Read 80-column cards	CRU0600/1050
Option CRF0003:	Read 51-column cards*	CRU0600/1050
Option CRF0004:	Read mark sense cards (51- or 80-column)**	CRU0600
Option CRF0005:	Read mark sense cards (51- or 80-column)**	CRU1050

* CRU0600/1050 read 51-column cards only if Option CRF0003 is installed. Option CRF0003 not available on Level 66.
** Mark sense capability available only on Level 62 and 64.

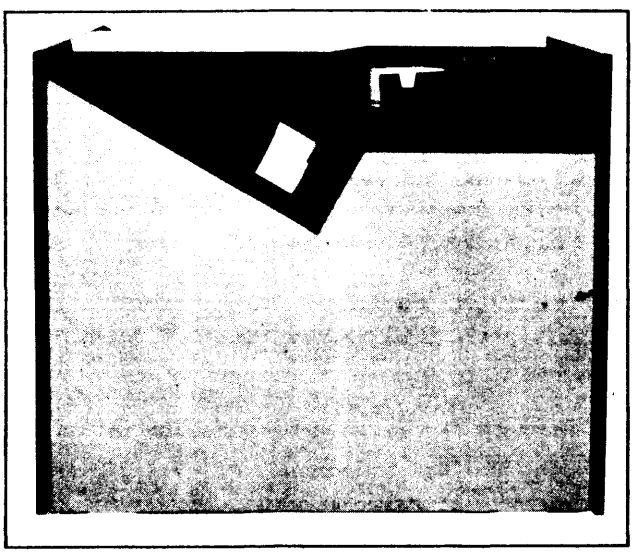

Figure C-1

INTRODUCTION (Cont'd.)

MARK SENSE CAPABILITY

The mark sense option available only on Level 62/64 applies to both 80-column and 51-column cards provided that the card reader is equipped with the 51-column option (CRF0003). Mark sense cards can read both punches and marks on the same card as long as the data is entered in the same card column format. Mark sense does not require special card paper quality; no synchronizing printed clock marks are necessary, as the timing is the same for punched holes and marks. However, use a reflective preprinted format on the card. For marking, a standard number 2 lead pencil gives a good reflectance reading and is ideal for marking because it is readily available and easy to correct.

The distinction between punched and marked data is made at the read station. When a beam of light from the photoelectric cell encounters a mark on the card, the mark absorbs the light emanating from the cell, temporarily darkening it. However, when a hole is encountered on the card, the light rays from the cell are either reflected by the card surface or the encountered hole, and the cell remains permanently lit.

In mark sense operation, the reading of decimal or binary marks is allowed as the mark code is identical to that of the punched hole code; i.e., marked sensed in row 9 indicates the figure 9. However, any combinations of marks up to 12 per column are acceptable but there must be a blank column before and after the mark(s). This allows for maximum marking of 40-columns on a given card.

A card with marks and punch fields must have at least one blank column before and after the punched column. Should a given column have both mark(s) and hole(s), only the holes are read in one pass.

MARKING MODES

Cards used for mark sensing conform in every respect with the card specifications described later in this section. In mark sense, there are two modes of operation: HIS (Honeywell 10-level code) and IBM (12-level code). If mark sense is factory-installed, the decision must be made by the user during point-of-purchase, lease, or device rental as to the desired mode of mark sense operation. However, should future conditions or applications warrant a mode change, it can be made in the field by competent Honeywell field engineering personnel. Call Honeywell Field Engineering Division (FED).

INTRODUCTION (Cont'd.)

HIS MARKING MODE

In the HIS marking mode, the marking side is the rear or back of the punched card and the mark sensing columns are even numbered from 2 through 8Ø. These marked column positions correspond physically on the other side of the card to punch columns odd numbered from 1 through 79. However, the marking format is offset with respect to the punch columns.

IBM MARKING MODE

The only IBM marking format that can be processed is the IBM Marking Mode. This mode has the vertical mark centered on the punch columns. In the IBM marking mode, the marking side is the front of the punched card (rear is not printed). Both odd and even columns can be used for marking within the same limit of 4Ø mark sense columns per card as in the HIS mode. When marking odd and even columns on the same card, at least two punch columns should be left blank in order to delimit the transition. Mark rows numbered 12, 11, Ø through 9, correspond respectively to punch rows 12, 11, Ø through 9.

OPERATOR CONTROL PANEL

The operator control panel on the card reader consists of (1) a main status panel and (2) a front status panel. On the right is the main status panel with alert indicators. Above that are the operator controls for turning the machine power on and off along with other operator functions. There are also display lights to indicate device state. On the left is the front status panel with its alert indicators (Figure C-2 shows the position of these panels.)

INTRODUCTION (Cont'd.)

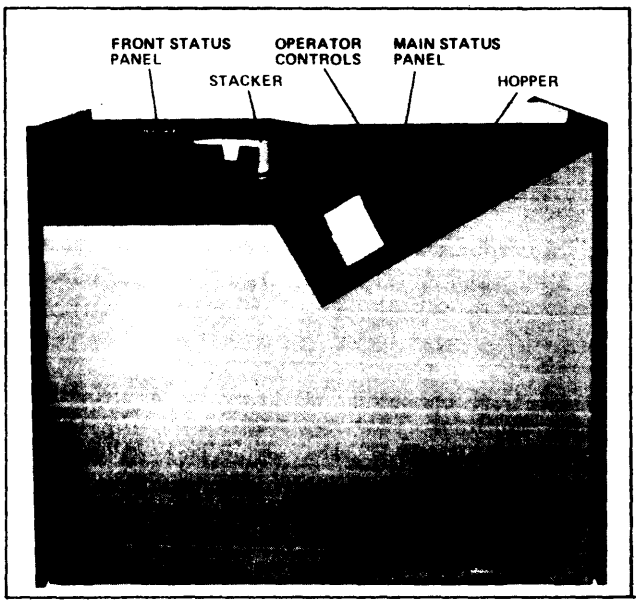

Figure C-2

OPERATOR CONTROL PANELS

The function of each of the operator controls and the cause and operator action required for each of the alerts are covered in this section.

OPERATOR CONTROLS

There are five different push button controls on the CRU0600/1050:

- POWER ON
- POWER OFF
- RUNOUT
- START
- STOP

They are all located on the main status panel (see Fig. C-3).

POWER ON Control

The POWER ON control applies dc power to the card reader and brings it to an operational state, as described in the "Power-Up" later in this appendix. It also functions as a lamp test switch because all indicators illuminate while this push button is pressed.

POWER OFF Control

The POWER OFF control removes dc power from the card reader, as described later in this appendix.

RUNOUT Control

The RUNOUT control clears the card track. It is also used after power-up to start the transport motors before pressing START, and to restart the transport motors after the alerts TRANSPORT JAM 1, TRANSPORT JAM 2, and INTERLOCK occur.

START Control

The START control brings the card reader from standby state to the ready state. Alert indicators are turned off if the corresponding faults have been cleared. If any faults have not been cleared, the corresponding indicators remain illuminated and the card reader stays in the standby state.

STOP Control

The STOP control brings the reader from the ready state to the standby state, and must be used before operator intervention on the device. The card reader goes into the standby state whenever a fault occurs.

OPERATOR CONTROL PANELS (Cont'd.)

OPERATOR ALERT INDICATORS

The cause of each alert and the action required to bring the card reader back to the ready state are described below. The control panel alert indicators are color-coded:

- Green for normal operation
- Yellow if operator action is required
- Red for major alert (possibly requiring field engineering attention)

The alert indicators are located on the front and main status panels.

Main Status Panel Alert Indicators

Figure C-1 shows the positions of the alert indicators on the main status panel.

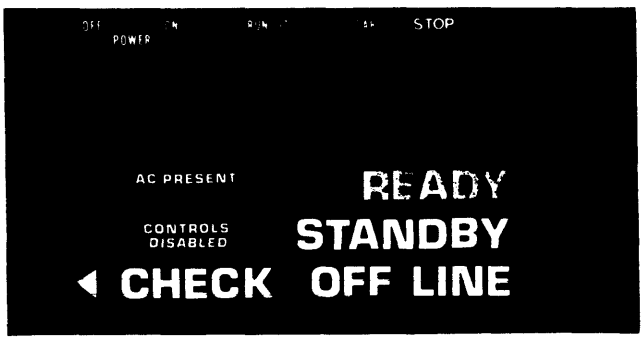

Figure C-3

OPERATOR CONTROL PANELS (Cont'd.)

CONTROLS DISABLED Indicator

There are two possible reasons for the CONTROL DISABLED indicator to illuminate (yellow). In both cases all the push button controls on the device except POWER OFF are disabled.

- CONTROLS DISABLED and either STANDBY or READY illuminated indicate no action is required by you. The controls are disabled because tests are being run on the device. If no faults are diagnosed, the card reader returns to the ready or standby state that existed before the tests began. If faults are diagnosed by the test routines, the card reader goes into the offline state.

- CONTROLS DISABLED and OFF LINE illuminated together indicate that a fault has been diagnosed or that the card reader has not been correctly initialized.

CHECK Indicator

The CHECK indicator illuminates (yellow) to indicate that an event has occurred; the type of event is indicated on the front status panel.

Front Status Panel Alert Indicators

Figure C-4 shows the positions of the alert indicators on the status panel.

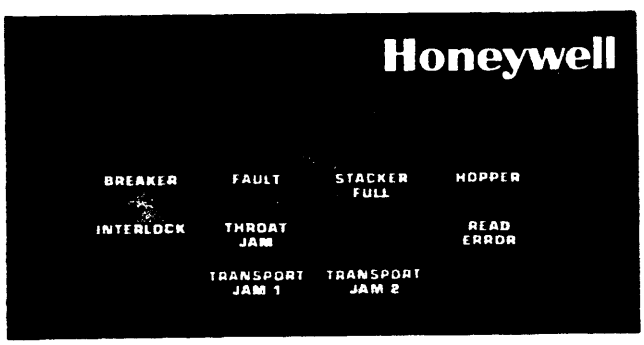

Figure C-4

OPERATOR CONTROL PANELS (Cont'd.)

BREAKER Indicator

The BREAKER indicator illuminates (yellow) if one of the circuit breakers on the ac interlock panel is open (Figures C-5 and C-6). The card reader powers down automatically if a circuit breaker opens after the unit has been powered up. To restart, ensure that all the breakers are switched on, and then power up the device.

FAULT Indicator

The FAULT Indicator illuminates (red) if there is a heat alert, kick overload, or pinch overload. The card reader powers down automatically.

STACKER FULL Indicator

The STACKER FULL indicator illuminates (yellow) if the stacker is full or if the antifountain switch is not set correctly. The antifountain switch is held closed by the pressure of the cards or the stacker weight against it and will only be released if the cards are not stacking correctly. To restart, remove the cards from the stacker, and then press START.

HOPPER Indicator

The HOPPER indicator illumniates (yellow) when the hopper and wait station are empty. To restart, refill the hopper and press START.

INTERLOCK Indicator

The INTERLOCK indicator illuminates (yellow) for any of the following:

- Cover is left open
- The air filter is not in position
- The wait station is open

Ensure that these are all correctly positioned, press RUNOUT to restart the transport motors, and then press START to restart the device.

THROAT JAM Indicator

The THROAT JAM indicator illuminates (yellow) if a card jams before the wait station. Remove the cards from the hopper and inspect the bottom cards. If any are damaged, smooth the edges, or replace them if necessary, and then place them back in the hopper. Press RUNOUT to restart the transport motors, and then press START to restart the device.

OPERATOR CONTROL PANELS (Cont'd.)

READ ERROR Indicator

The READ ERROR indicator illuminates (yellow) if a read comparison error occurs and the offset facility is not being used, the colmun count is incorrect, or if there is not all-dark/all-light after reading a card. To restart, press RUNOUT to clear the track. Check the error card which is next to last in the stacker, and replace it if necessary, and then place both cards at the front of the hopper and depress START.

TRANSPORT JAM 1 Indicator

TRANSPORT JAM 1 illuminates (yellow) when a jam occurs before the read station. You should remove any cards from the read station or wait station, replace them in the hopper, and press RUNOUT to clear the track. Then obey the restart procedure specified by the programmer.

TRANSPORT JAM 2 Indicator

TRANSPORT JAM 2 illuminates (yellow) when a jam occurs after the read station. You should remove all cards from the wait station, read station, and track, and press RUNOUT to restart the transport motors. Then obey the restart procedures specified by the programmer.

OPERATING PROCEDURES

There are three main device states for the CRU0600/1050: offline, standby, and ready. The device state is displayed on the main status panel (Figure C-3). The card reader is in the offline state if it is not logically connected to the processor; it is in the standby state when it is connected to the processor but is not operational (i.e., there are no cards in the hopper); it is in the ready state when fully operational, being able to receive and process commands from the processor.

POWER UP

Power up is the transition from an unpowered state to a fully operational state. To power up, you perform the following:

1. Switch on the device main ac circuit breaker (Figure C-5) located on the ac interlock panel at the rear of the device (Figure C-6). Ensure that the secondary circuit breakers (Figure C-5) are also on. AC PRESENT on the main status panel will illuminate.

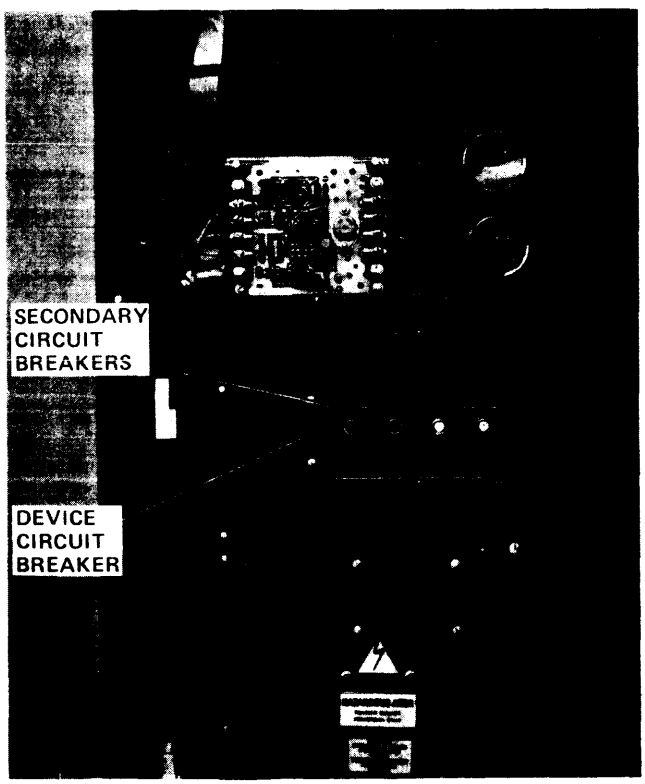

Figure C-5

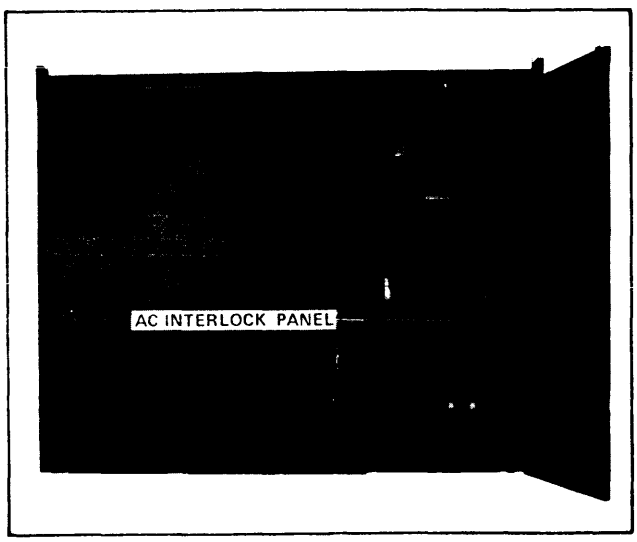

Figure C-6

OPERATING PROCEDURES (Cont'd.)

2. Press POWER ON. The following events take place:

   - o While POWER ON is pressed, all the display panel indicators are illuminated. If any are not illuminated, the lamps should be checked and replaced if necessary.

   - o When POWER ON is released, all indicators except OFF LINE and AC PRESENT are turned off.

   - o If the processor is initialized, OFF LINE is turned off and STANDBY is illuminated. This will occur about 1 second after pressing the POWER ON push button. If the processor is not initialized, OFF LINE and CONTROLS DISABLED remain illuminated until initialization has terminated on the processor. STANDBY then illuminates and OFF LINE and CONTROLS DISABLED turn off.

3. When STANDBY illuminates, press the RUNOUT push button. This causes all the device motors to power up, and clears the transport of any cards.

4. When the STANDBY indicator illuminates and the transport has been cleared, load cards and press START. If the card reader is ready, the STANDBY indicator goes off and READY illuminates. If READY does not illuminate, check the indicators and take the appropriate action.

POWER DOWN

If the card reader is in the ready state, press STOP to put it into the standby state. (Otherwise erroneous data may be transferred.) When the device is in the standby state, press the POWER OFF push button and then switch off the device main circuit breaker on the ac interlock panel (Figure C-5).

OPERATING PROCEDURES (Cont'd.)

CARD LOADING

Select the type of card to be read: 80-column, 51-column, or mark sense. Data may be punched or marked, or may consist of both punches and marks intermixed. Mark sense cards can read both punches and marks on the same card provided that data is entered on the same format[1], i.e., all 80-column format or all 51-column format[2].

Mark sense cards may be marked with any medium that is sufficiently nonreflective. The marks should be clear and legible. A standard number 2 lead pencil gives reflectance readings of about 3 percent and is ideal for marking the cards because of its general availability and the ease with which mistakes in marking may be corrected.

When marking mark sense cards, it is not necessary to rub back and forth over a mark to make it appear big and black. In fact, such a technique is likely to cause problems rather than prevent them. It is the clarity and positioning of the mark that is more important than the apparent intensity of the mark to the eye. If a mark is placed outside of a marking area, it should be erased and placed in the proper area instead of being widened until it extends into the proper area. Cards must be kept reasonable clean. If the desired marks are allowed to become smudgy or smeared, erroneous data may result.

Prior to input hopper loading, cards should be visually checked for nicks and buckles and with mark sense cards smears and smudges. Do not use worn or abused cards.

1. Remove the follower block (Figure C-7).

2. If 51-column cards are to be read, place the hopper guide rail in position (Figure C-7). This rail just clips into position (Figure C-8) and makes a contact to inform the device electronics that only 51-columns are to be read.

3. Riffle the cards to prevent sticking, and ensure that all the cards are aligned correctly.

4. Place the cards in the hopper (Figure C-9). Punch cards are placed with the 9-edge down and column 1 away from you. If mark sense cards are used in HIS mode (remember

[1] A Mark Sense card with fields must have at least one blank column before and after the punched columns.

[2] Card Reader must have 51-column option (CRF0003) to read 51-column cards.

OPERATING PROCEDURES (Cont'd.)

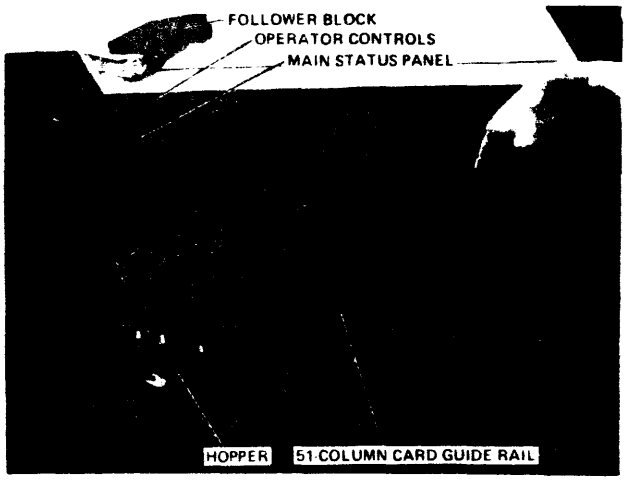

Figure C-7

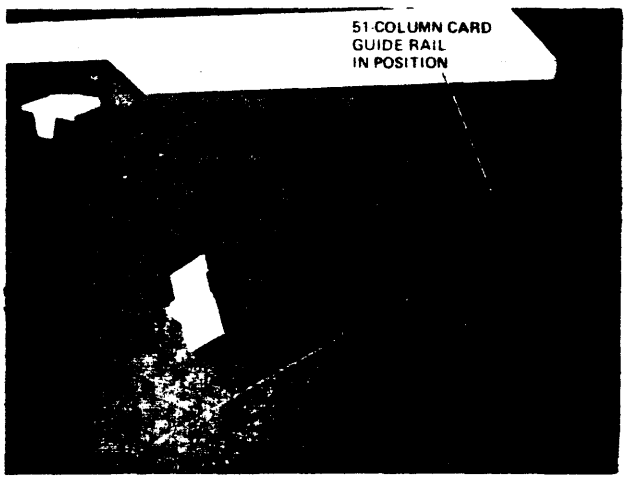

Figure C-8

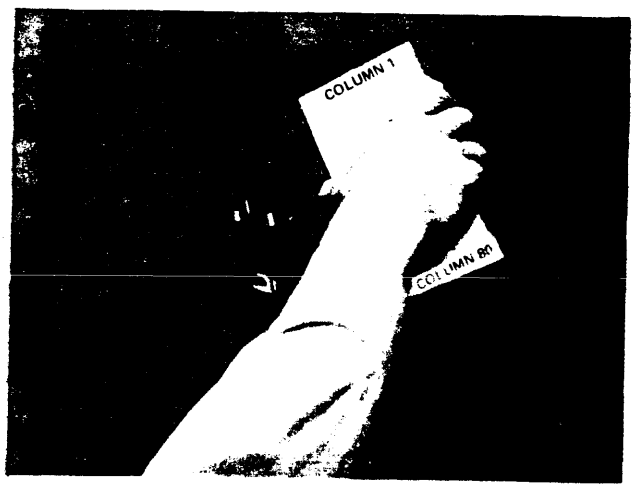

Figure C-9

OPERATING PROCEDURES (Cont'd.)

CARD LOADING (cont'd.)

marking side is the back of the punched card), place them with the mark surface up and column 1 away from you. If mark sense cards are used in IBM mode (remember cards are marked on the front), the card deck must be reversed before placing in the hopper. The cards must be placed with the row of 12 facing down. In case of cards with both marked and punched fields in the IBM mode, there is an automatic inversion of the punched rows, the correct values being rectified automatically by the firmware.

5. Place the follower block on top of the card pack. A special follower block is provided for use with 51-column cards.

6. If turnaround cards (stub or talon) are to be read, the track select switch, which is accessed by opening the front cover, must be set according to whether the edge of the card is clean between rows 6 and 7, or clean between rows 7 and 8.

7. Press START.

OPERATING PROCEDURES (Cont'd.)

CARD UNLOADING

If there are no cards offset in the stacker, pull back the stacker weight (Figure C-10), lift out the cards, and replace the weight. The stacker weight is spring-loaded to maintain a slight pressure on the cards. Do not release the weight until it is in position. If any cards are offset, replace them in the hopper and press START. To remove cards while the card reader is running, pull back the stacker weight far enough to remove the cards, but not all the way (otherwise a stacker full alert occurs). About 1/2-inch (1 cm) of cards should be held against the antifountain switch while removing the cards (Figure C-11).

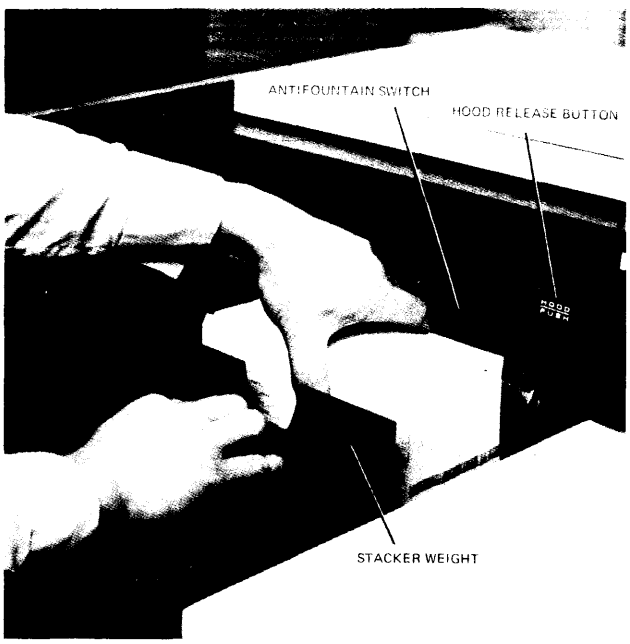

Figure C-10

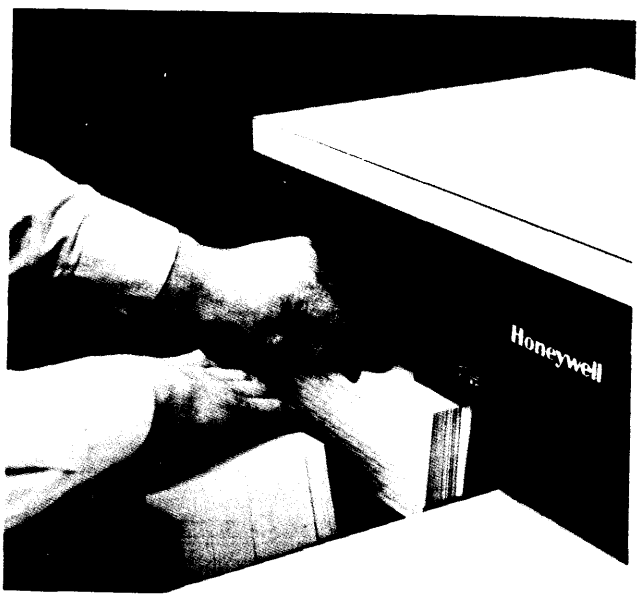

Figure C-11

OPERATING PROCEDURES (Cont'd.)

CLEARING CARD JAMS

If a jam occurs, clear the cards from the wait station, kick station, or track.

To clear a card from the wait station, lift the hopper table to gain access. Lift the handle on the wait station (Figure C-12) and pull out the card.

To clear a card from the kick station, open the rear doors and pull the card out (Figure C-13).

To clear a card from the track, open the rear doors and pull the card out.

You should always ensure that all fragments of the defective card have been removed.

OPERATING PROCEDURES (Cont'd.)

Figure C-12

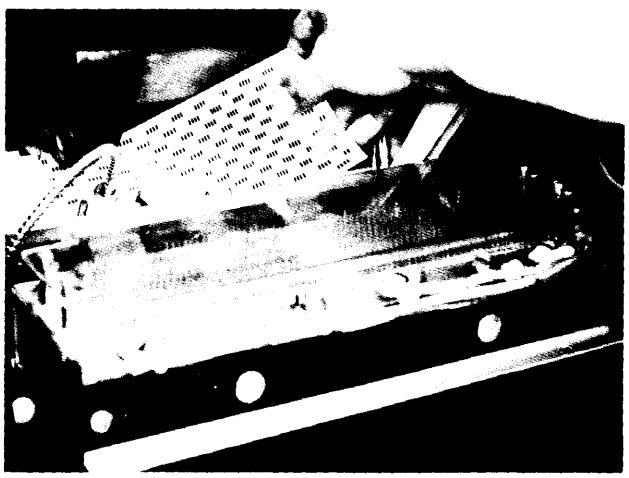

Figure C-13

PCU0121 CARD PUNCH

SERIES 60 (LEVEL 66)

The PCU0121 Card Punch is designed to meet current and future data processing needs. Punching 80-column cards at a speed of 100 to 400 cards per minute, it features:

- Versatility
- Date integrity
- Operator convenience
- Improved system availability

VERSATILITY

The PCU0121 punches both Hollerith and binary codes, feeding cards in a column-by-column end-feed mode. System efficiency is improved through high-speed skipping of blank columns.

DATA INTEGRITY

Data integrity is ensured by three separate checks:

- Comparison - after the punches are activated, their position is sensed and the result automatically compared with the data specified for punching.

- Parity - data transfer between the I/O control and the card punch is checked for odd parity.

- Validity - in Hollerith mode, all characters are checked to ensure that they represent valid codes.

Punching errors cause the card to be offset from the rest of the deck in the stacker; punching may continue or stop so the operator can take corrective action.

OPERATOR CONVENIENCE

Operator convenience features include large, well designed hoppers and stackers for smooth card handling, large chad containers that require less frequent attention, and easily understood color-coded displays. Large displays are used for general status information, while smaller, more definitive displays are used for indications requiring operator response. Push-button operation gives the operator fingertip control of the card punch. The entire card path is easily accessible.

PCU0121 CARD PUNCH (Cont'd.)

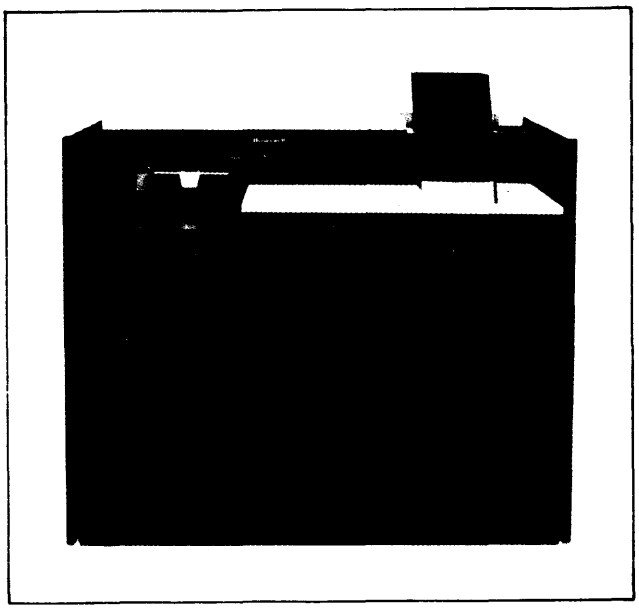

Figure C-14

IMPROVED SYSTEM AVAILABILITY

Software control of online error status reporting reduces time required for diagnosis and offline repair, as well as the number of service calls. This means higher uptime and reduced service costs.

PCU0121 CARD PUNCH (Cont'd.)

SPECIFICATIONS

PUNCHING SPEED: 100 to 400 cards per minute, depending on the number of columns punched.
MEDIA: 80-column cards.
INPUT HOPPER CAPACITY: 1200 cards.
OUTPUT STACKER CAPACITY: 1300 cards.
PHYSICAL DIMENSIONS:
Height - 39 inches (99.1 cm).
Width - 45 inches (114.3 cm).
Depth - 30 inches (76.2 cm).
WEIGHT: 550 lbs. (250 kg).

CCU0401 CARD READER/PUNCH

SERIES 60 (LEVEL 66)

The CCU0401 Card Reader/Punch (Figure C-15)is designed to meet current and future data processing needs. The CCU0401 reads at a speed of 400 cards per minute or punches at speeds from 100 to 400 cards per minute. In addition, it features:

- Versatility
- Data integrity
- Operator convenience
- Improved system availability

VERSATILITY

The CCU0401 reads or punches both Hollerith and binary codes, feeding cards in a column-by-column end-feed mode. System efficiency is improved through high-speed skipping of blank columns when in the punching mode. The CCU0401 can be used as a card reader or as a card punch, but not both simultaneously.

DATA INTEGRITY

Data integrity is ensured by a reliable optical system of reading and by data column identification by optical synchronization on the trailing edge of the card. In addition, there are three separate checks.

- Comparison - on reading, each column is read twice; on punching, after the punches are activated, their position is sensed and the result automatically compared with the data specified for punching.

- Parity - data transfer between the I/O control and the card reader/punch is checked for odd parity.

- Validity - in Hollerith mode, all characters are checked to ensure that they represent valid codes.

Reading or punching errors cause the card to be offset from the rest of the deck; reading or punching may continue or stop so the operator can take corrective action.

CCU0401 CARD READER/PUNCH (Cont'd.)

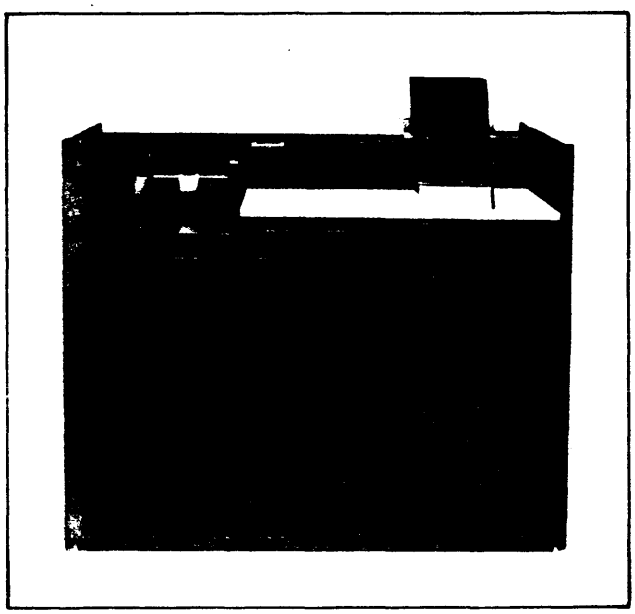

Figure C-15

OPERATOR CONVENIENCE

Operator convenience features including large, well-designed hoppers and stackers for smooth card handling, large chad containers that require less frequent attention, and easily understood color-coded displays. Large displays are used for general status information, while smaller, more definitive displays are used for indications requiring operator response. Push-button operation gives the operator fingertip control of the card reader/punch. The entire card path is easily accessible.

CCU0401 CARD READER/PUNCH (Cont'd.)

IMPROVED SYSTEM AVAILABILITY

Software control of online error status reporting reduces the time required for diagnosis and offline repair, as well as the number of service calls. This means higher uptime and reduced service costs.

PRT301

TYPE SLUG

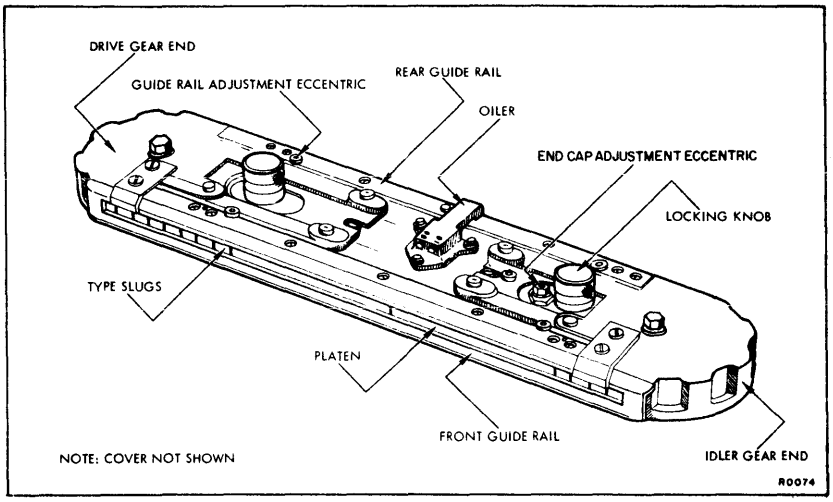

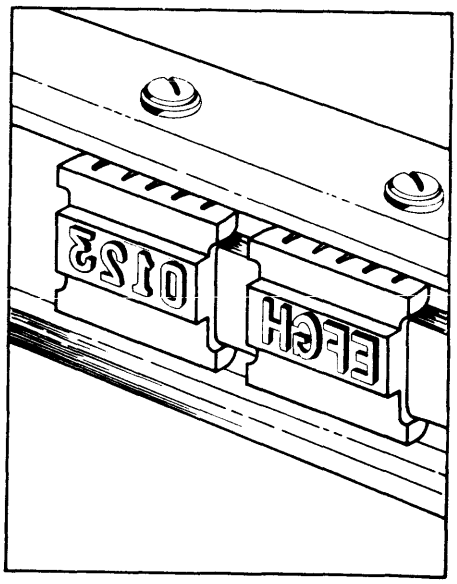

PRU1200 and PRU1600 PRINTERS

INTRODUCTION

The PRU1200 and PRU1600 high-speed belt printers (Figure C-17) produce clear printed copy at a speed of 1200 and 1600 lines per minute for continuous single-spaced line operation with a 48-character set. Line width is 136 print positions; however, an extended print option allows 160 print positions per line.

The print belt is packaged in a lightweight cartridge that enables easy removal, interchange, and storage. Each character on the print belt is mounted on a flexible "finger." During printing, the belt passes continuously at high speed in front of the print hammers. When a character is struck, the flexibility of the finger causes the character to be immobilized at the moment of impact. This eliminates drag and results in smearless, ghost-free, high-quality printed copy. The system is programmed to recognize the belt being used from the code on the cartridge.

The PRU1200/1600 printer units connect to Series 60 Level 62, 64, 66, and 68 systems. The printers connect to Model 62/60 systems via physically-integrated controls in the input/output control (IOC); to Level 64 systems through an integrated Unit Record Processor; to Level 66 systems through either a freestanding (URP0600) or integrated Unit Record Processor (URP0601/0602); and to Level 68 systems through a freestanding Unit Record Processor (URP0600). An addressing feature is required with each printer unit to enable connection to the control function. The URP0600/0601/0602 require operator interaction.

FEATURES

The following features are standard on both printers:

- Exceptional print quality - accomplished through the use of a new and unique print belt with 136 print positions standard (160 optional).
- Advanced acoustical design - results in extremely quiet and efficient operation; conforms to the Occupational Safety and Health Act (OSHA) regulations.
- Longer ribbon life - achieved as a result of reduced ribbon drag during the printing process.

PRU1200 and PRU1600 PRINTERS

INTRODUCTION

Features (Cont'd.)

- Extended printer life - made possible by an automatic standby feature that deactivates the operating mechanism of the device when it is not being used.
- Variety of character sets - available in 48-character IBM "AN", 63-character Series 400/600/6000, 63-character ASCII, 64-character Series 200/2000, or 94-character ASCII (U/L case).
- Improved operator efficiency - accomplished by an automatic paper stacker, simple paper loading and ribbon changing procedures, quick and easy exchange of lightweight belt cartridges, and clear color-coded displays.

OPTION

Extended Print Position (PRF0022) increases the number of print positions per line from 136 to 160. (Not offered on Level 64).

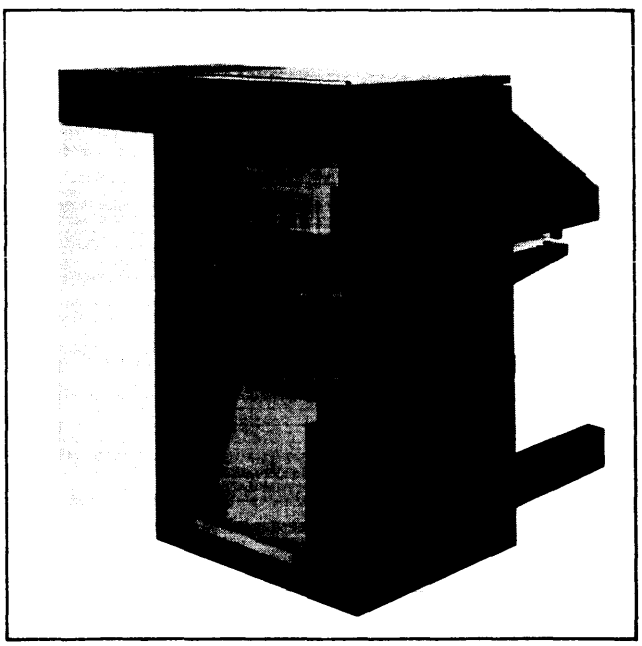

Figure C-17

CONTROLS AND INDICATORS

There are two operator control panels on the PRU1200/1600 Printer units; a main control panel located on the front of the unit and an auxiliary control panel located on the rear of the unit along with the stacker controls (Figure C-18). A description of the function of each indicator and control is listed in Table C-2. Indicators are visible only when illuminated. A maintenance panel, located behind the left front door, contains some controls applicable to the operator. These are shown in Figure 2-3 and described in Table C-2.

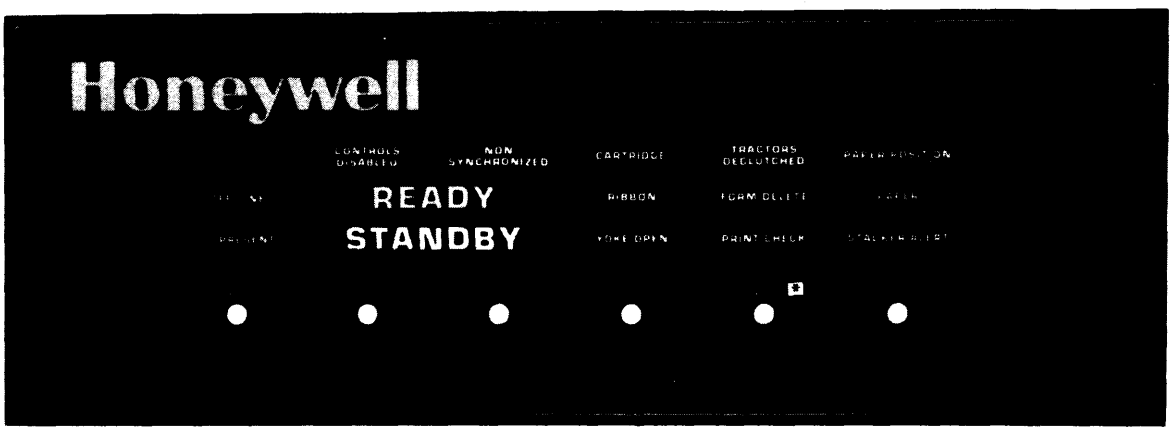

*Active on Level 66 and 68 systems only.

Figure C-18

The indicators are color-coded as follows:

- Green - indicates normal operation
- Yellow - indicates operator action required
- Red - indicates major fault possibly requiring field engineering assistance

MAIN CONTROL PANEL

The main control panel contains six push buttons and sixteen indicators.

AUXILIARY CONTROL PANEL

The auxiliary control panel contains six push buttons and five indicators.

MAINTENANCE PANEL

The maintenance panel contains a variety of push buttons and indicators; however, only a few of these are for operator use.

CONTROLS AND INDICATORS (Cont'd.)

TABLE C-2. MAIN CONTROL PANEL CONTROLS AND INDICATORS

Push Botton/Indicator	Function
POWER OFF	This push button removes dc power from printer.
POWER ON	This push button applies dc power to printer. It also initiates lamp test illuminating all of the indicators.
STOP	This push button changes printer from ready state to standby state.
START	This push button changes printer from standby state to ready state and resets any alert indicators if fault was cleared.
PRINT TEST	This push button is used in checking print quality or forms positioning, and is operable in only standby state. It causes a line of Es to be printed and a slew of one line to occur, thus enabling operator to verify that all hammers are operational. NOTE: This push button is active on Level 66 and 68 systems only.
SKIP	This push button advances paper and is usable in only standby state. If firmware is loaded and a Vertical Format Control (VFC) image is loaded, a slew to the top of page as specified by current VFC image will occur each time SKIP is pressed. If no firmware VFC image is loaded, no slew will occur.
AC PRESENT (green)	Indicates ac power is applied to printer.
OFF LINE (green)	Indicates printer is not logically connected to processor.
STANDBY (yellow)	Indicates printer is not available for operation.
READY (green)	Indicates printer is available for operation.

CONTROLS AND INDICATORS (Cont'd.)

TABLE C-2 MAIN CONTROL PANEL CONTROLS AND INDICATORS (Cont'd.)

Push Botton/Indicator	Function
FAULT (red)	Indicates major fault possibly requiring field engineering attention.
CONTROLS DISABLED (yellow)	Indicates all push button except POWER OFF are disabled either because tests are being run or a fault has been detected by tests.
NON-SYNCHRONIZED (yellow)	Indicates printer is not initiated properly.
CARTRIDGE (yellow)	Indicates print belt is incorrectly positioned or damaged and is inoperable until fixed.
RIBBON (yellow)	Indicates ribbon is incorrectly positioned or badly worn.
YOKE OPEN (yellow)	Indicates belt gate or ribbon door is not fully closed.
TRACTORS DECLUTCHED (yellow)	Indicates tractors lever is disengaged.
FORM DELETE (yellow)	Indicates operator should look for a console message from system, giving information as to marking or destroying last page or pages printed.
PRINT CHECK (yellow)	Indicates PRINT TEST was pressed or it was illuminated in conjunction with a system-initiated printout.
PAPER POSITION (yellow)	Indicates lefthand tractor is not in line with column 1 reference mark.
PAPER (yellow)	Indicates paper torn, no paper, or end of paper.
STACKER ALERT (yellow)	Indicates stacker is full or a stacker jam.

CONTROLS AND INDICATORS (Cont'd.)

TABLE C-2 MAIN CONTROL PANEL CONTROLS AND INDICATORS (Cont'd.)

Push Botton/Indicator	Function
POWER OFF	This push button removes dc power from printer.
STOP	This push button changes printer from ready state to standby state.
START	This push button changes printer from standby state to ready state and resets any alert indicators if fault was cleared.
SKIP	This push button advances paper and is usable in only standby state. If firmware is loaded and a Vertical Format Control (VFC) image is loaded, a slew to the top of page as specified by current VFC image will occur each time SKIP is pressed. If no firmware VFC image is loaded, no slew will occur.
CLEAR PAPER	This push button feeds last printed forms into stacker if they are ripped off above tractors.
LOWER TABLE	This push button causes table to lower to facilitate removal of printed forms.
OFFLINE (green)	Indicates printer is not logically connected to processor.
STANDBY (yellow)	Indicates printer is not available for operation.
READY (green)	Indicates printer is available for operation.
NON-SYNCHRONIZED (yellow)	Indicates printer is not initialized properly.

TABLE C-2 MAIN CONTROL PANEL CONTROLS AND INDICATORS (Cont'd.)

Control/Indicator	Function
PWON	Indicates power is on.
THAB	Indicates thermal alert in belt motor.
THAPR	Indicates thermal alert in print power supply.
ACOC	Indicates ac overcurrent condition.
DCA	Indicates dc power supplies alert.
SSI	Indicates skip supply incident.
RBI	Indicates ribbon incident.
CKI	Indicates clock fault.
YKN	Indicates belt gate is open.
THASL	Indicates thermal alert in skip motor.
PFA	Indicates phase failure alert.
FFOI	Indicates frame or filters open incident.
PPSI	Indicates print power supply incident.
FANI	Indicates fans incident.
CART	Indicates cartridge incident.
SKIP	Up for normal operation. Down for operation with flimsy paper (cancels medium and high skip speeds).

NOTE: The following push buttons are applicable to Level 66 and 68 systems.

SINGLE CYCLE	If pressed with printer in ready state and printing, printing terminates and skip that normally follows printing is is not executed and standby state is entered. If pressed with printer in standby state, another line will be printed. Ready state is restored by pressing START on main control panel.

MAINTENANCE PANEL DISPLAY (Cont'd.)

TABLE C-2 MAIN CONTROL PANEL CONTROLS AND INDICATORS (Cont'd.)

Control/Indicator	Function
NOTE:	The eight clustered printer-software interface push buttons, which are located on the maintenance panel, permit the operator to communicate with the control program to which the printer is allocated.

Printer Push Button Interface

A series of push buttons can be used for printer error recovery. By pressing the appropriate push button while the printer is online, programmatic procedures, which attempt to correct the condition, are initiated. Conditions that signal the need for this action may be reported via a console message defining a specific status/substatus or may be visually apparent to the operator. The following push buttons are common to all printers:

BACKSPACE
FORWARD SPACE
BK. SPACE T.O.P
FORWARD T.O.P
REVERSE REWIND
PRINT ONE LINE
INVALID LINE
NORMAL

These push buttons are operable with SYSOUT, via UFAS (when a dedicated printer is assigned), and Bulk Media Conversion (BMC) operations, but are inoperable with File and Record Control functions. In addition, the push buttons have somewhat different results when used with SYSOUT than when used with BMC or via UFAS (refer to the GCOS 8 OS Unified File Access System (UFAS) Reference Manual for these procedures). Table C-3 briefly defines the SYSOUT and BMC differences.

Multiple statuses/substatuses can be sent to the console and multiple actions can be initiated via the push buttons before returning to normal printing by pressing either the OPERATE/RESET or the START push buttons.

If the action initiated by the push button does not correct the condition and the error persists, it may be necessary to release the device from the system configuration.

Table C-3. Printer Push Button In SYSOUT And BMC Operations

Push Button	Description
BACKSPACE	SYSOUT: The printer is placed in a manual halt state. ** BACKSPACE prints on the output. For any report other than an execution report, SYSOUT backspaces one record and waits for operator action. The same action occurs for an execution report if the backspacing stays within the current I/O request to the printer. If the backspacing attempts to go ahead of that operator-invisible boundary for an execution report, SYSOUT automatically resumes printing at the beginning of the execution report. Multiple backspacing is permitted. BMC: The printer is placed in a manual halt state. BACKSPACE prints on the output. Multiple backspacing is permitted.
FORWARD SPACE	SYSOUT: The message ** OPERATOR KILLED THIS REPORT prints on the output and printing resumes with the next report. BMC: The message OPERATOR KILLED THIS REPORT prints out on the output and printing resumes with the next report.
BK. SPACE T.O.P.	SYSOUT: The printer is placed in a manual halt state. ** BACK SPACE TOP prints on the output. SYSOUT backspaces to the beginning of the block. Multiple backspacing is permitted and, in most cases, goes back multiple blocks. If this is an Execution Report, printing automatically resumes at the beginning of the job. BMC: The message BACKSPACE TO TOP OF PAGE prints on the output and input is backspaced to the previous top-of-page position for the current report. To backspace multiple pages, press the BK. SPACE T.O.P. push button and then the OPERATE/RESET (RESTART) push button once for each page.
FORWARD T.O.P.	SYSOUT: The message ** FORWARD SPACE TOP prints on the output and input is forward spaced to the beginning of the next data block. Multiple forward spacing is permitted. If this is an Execution Report, records which remain in the current print request are ignored, but printing resumes with the next unprocessed record.

Table C-3. Printer Push Button In SYSOUT And BMC Operations

Push Button	Description
FORWARD T.O.P. (Continued)	BMC: The message FORWARD SPACE TO TOP OF PAGE prints on the output. The remainder of the input for the current page is skipped and printer paper is slewed to the top of the next page. Multiple forward spacing is permitted.
REVERSE REWIND	SYSOUT: The message ** OPERATOR RESTARTED THIS REPORT prints on the output and printing of the current report is automatically restarted. BMC: The message OPERATOR RESTARTED THIS REPORT prints on the output. Input is repositioned to the beginning of the current report and printer paper is slewed to the top of the next page.
PRINT ONE LINE	SYSOUT: The next line of data is printed and the printer is placed in a manual halt state. BMC: The next line of data is printed and the printer is placed in a manual halt state.
INVALID LINE	SYSOUT: The message ** INVALID LINE prints on the output, the current logical record is skipped, and the printer is placed in a manual halt state. BMC: The message INVALID LINE prints on the output and the current logical record is skipped.
NORMAL	SYSOUT: The printer is released from the manual halt state. To resume normal printing, press the OPERATE/RESET (RESTART) push button. BMC: The printer is released from the manual halt state. To resume normal printing, press the OPERATE/RESET (RESTART) push button.

The following represents the general sequence of events that occur when the operator attempts to correct a single error condition:

1. Press the HALT push button or the desired function push button to stop printing. If the printer was in the Ready state, the printer is now in a Standby condition.

2. If only the HALT push button was pressed in step 1, the desired function push button can be pressed. (Or, if a function push button was pressed in step 1, another function can be selected at this point.) Only the function associated with the last push button is transmitted to the control program.

3. Press the OPERATE/RESET or the START push button. A code representing the last selected function is sent to the control program. SYSOUT or BMC then issues commands to perform the requested action.

4. Steps 2 and 3 can be repeated until the operator is ready to resume normal printing operations.

5. To resume normal printing operations, press the NORMAL push button and then press the OPERATE/RESET or the START push button.

Unless otherwise stated, printing is resumed following use of one of these buttons by pressing the NORMAL push button and the OPERATE/RESET (or RESTART) push button.

EXAMPLES OF PUSH BUTTON USE WITH SYSOUT

The following examples briefly define the push button sequences required to perform several SYSOUT functions.

1. Print the next line of a report:

   ```
   PRINT ONE LINE
   OPERATE/RESET (or RESTART)
   NORMAL
   OPERATE/RESET (or RESTART)
   ```

2. Terminate this report and proceed to the next report:

   ```
   FORWARD SPACE
   OPERATE/RESET (or RESTART)
   NORMAL
   OPERATE/RESET (or RESTART)
   ```

3. Space to the beginning of the next data block:

   ```
   FORWARD T.O.P
   OPERATE/RESET (or RESTART)
   ```

4. Reprint all of the current report:

   ```
   REVERSE REWIND
   OPERATE/RESET (or RESTART)
   ```

EXAMPLES OF PUSH BUTTON USE WITH SYSOUT (Cont'd.)

5. Reprint the last line of the current report:

   BACKSPACE
   OPERATE/RESET (or RESTART)
   NORMAL
   OPERATE RESET (or RESTART)

6. Reprint the current block of data:

   BK. SPACE T.O.P.
   OPERATE/RESET (or RESTART)

OPERATION AND MAINTENANCE

This section first details routine as well as exceptional operating procedures, and then explains the operator's tasks in preventive maintenance. To minimize the possibility of error or damage to the paper/printer, it is important that the operator understand the use and function of the various controls and indicators previously explained.

DEVICE STATES

The three main device states for the printer unit are displayable on the main control panel:

- Offline - not logically connected to the central processor.
- Standby - logically connected to the central processor but not operational (e.g., operator loading or removing paper)
- Ready - fully operational and ready to receive and process commands from the processor

OPERATING PROCEDURES

Power-Up Sequence

In the following procedure, it is assumed that all cables have been properly connected and that power is applied to the unit.

1. Set device main and secondary circuit breakers located on rear circuit breaker panel to ON. AC PRESENT illuminates on main operator control panel.
2. Press POWER ON. The following events take place:
   - While POWER ON is pressed, all display panel indicators illuminate. If any do not illuminate, lamps should be checked and replaced if necessary (refer to "Control Panel Indicator Lamp Checking").
   - When POWER ON is released, all indicators except OFF LINE and AC PRESENT turn off.
3. When STANDBY indicator illuminates and paper is properly positioned, press START push button. If printer is ready, STANDBY indicator goes off, and READY illuminates. If READY does not illuminate, check alert indicators and take appropriate action as described in Table C-4.

OPERATION AND MAINTENANCE (Cont'd.)

TABLE C-4. RESTART PROCEDURES

Indicator(s) Illuminated	Procedures
PRINT CHECK STANDBY	1. Check printout. 2. If satisfactory, press START; if not satisfactory, adjust forms, and press PRINT TEST. 3. Repeat steps 1 and 2 until satisfied.
CONTROLS DISABLED STANDBY or READY	No action required. Controls are disabled because tests are being run on device. As soon as tests are finished, printer returns to ready or standby state that existed before tests began.
CONTROLS DISABLED OFFLINE	Fault diagnosed by test routines, and printer is in offline state. There is either a fault in printer or processor, or printer firmware package is absent. Obey any console messages and if fault persists, notify Honeywell field engineer.
CARTRIDGE STANDBY	Check belt for incorrect positions on pulleys, or broken/twisted belt finger. Refer to "Changing/Adjusting Print Belt Cartridge" procedures.
NONSYNCHRONIZED STANDBY	1. Declutch tractors. 2. Reposition paper for head-of-form. 3. Press SKIP. 4. Engage tractors 5. Press START.
FAULT STANDBY	1. Trip main circuit breaker. 2. Check all other breakers. 3. Reset circuit breakers if necessary. 4. Reset main circuit breaker. 5. Perform "Power-Up Sequence". 6. If fault persists, set main circuit breaker to OFF and notify Honeywell field engineer.
FORM DELETE STANDBY	Refer to console for message providing instructions.

TABLE C-4. RESTART PROCEDURES (Cont'd.)

Indicator(s) Illuminated	Procedures
PAPER STANDBY	Refer to appropriate procedure Paper Torn If only last page needs reprinting - reposition paper, press SKIP, and press START. If more than one page needs reprinting - press PRINT TEST, and indicate restart point from console. No Paper/End of Paper Sensed Reload and press START. NOTE: The printer senses end of paper 12 inches (30.5 cm) before actual end, and continues printing to end of current form before giving paper alert. None of the above Check sensors in tractors for blockage. Remove any paper fragments, press SKIP, and press START.
RIBBON STANDBY	1. Reposition and visually check ribbon. 2. Replace if necessary. 3. Check printout and decide how many pages need reprinting. If only last page to be reprinted - press START. If more than one page to be reprinted - press PRINT TEST, and indicate restart point from console.
STACKER ALERT STANDBY	1. Unload stacker. 2. Reset stacker table. 3. Press START.
TRACTORS DECLUTCHED STANDBY	1. Engage tractors lever. 2. Press START.
YOKE OPEN STANDBY	1. Check to see if belt gate or ribbon door is not fully closed. 2. Press START.

TABLE C-4. RESTART PROCEDURES (Cont'd.)

INDICATOR(S) Illuminated	Procedures
PAPER POSITION	1. Declutch tractors. 2. Align fold of form with scribe mark on tractors. 3. Press SKIP. 4. Reclutch tractors. 5. Press SKIP. (A slew to the top of the page as defined by the current VFC image will be executed if there is an image resident in the URP. If there is no image resident, the slew will be executed at the time the VFC image is loaded into the URP.)
POWER	

Primary power to the printer is controlled by a group of circuit breakers - Device Main and Secondary - located at the rear of the printer (Figure C-19). When both groups of circuit breakers are set to ON, AC PRESENT is illuminated on the main control panel.

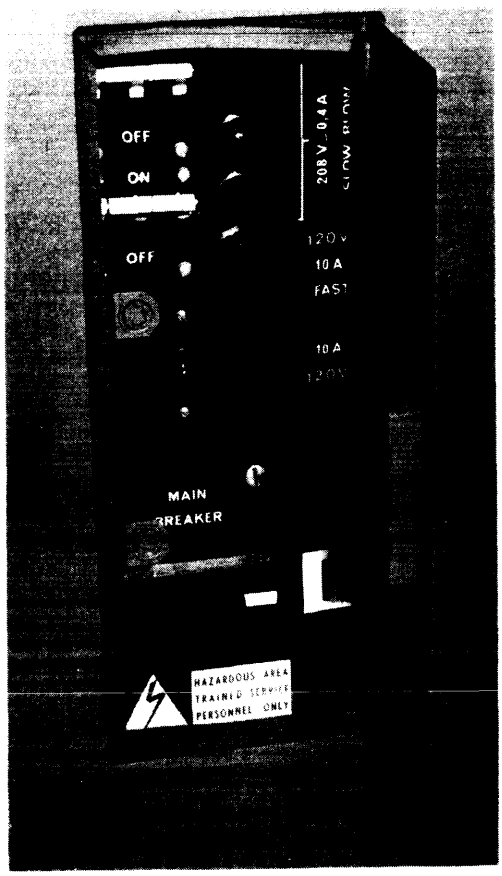

Figure C-19. Rear Circuit Breaker Panel

OPERATION AND MAINTENANCE (Cont'd.)

Power-Down Sequence

1. Press STOP to put printer in standby state: otherwise data may be lost.
   STANDBY illuminates.

2. Press POWER OFF.

3. Set device main circuit breaker to OFF.

Emergency Power-Down Sequence

In an emergency, switch off device main circuit breakers on all peripherals and ac main circuit breaker to system.

Paper Loading

Position paper in response either to console message or to PAPER alert on operator control panel. To load paper:

1. If printer is in ready state, press STOP push button. Printer then goes into standby state.

2. Press SKIP.

3. To gain access to paper track, open both front doors and then open belt gate by pulling release lever on right-hand end of gate (Figure C-20).

4. Remove paper from box and then place paper on platform (Figure C-20).

5. Disengage tractors by pulling tractors level, on left-hand side, down. (Figure C-21).

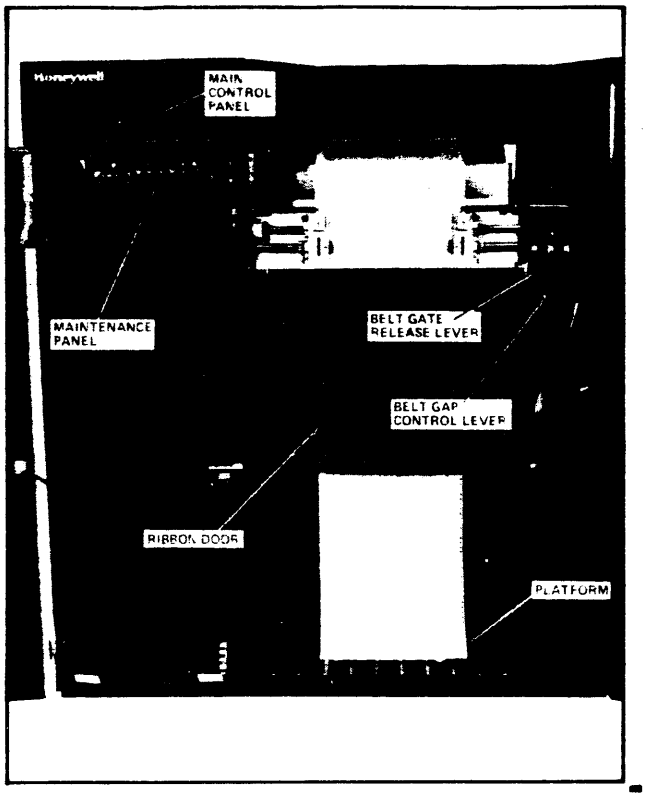

Figure C-20

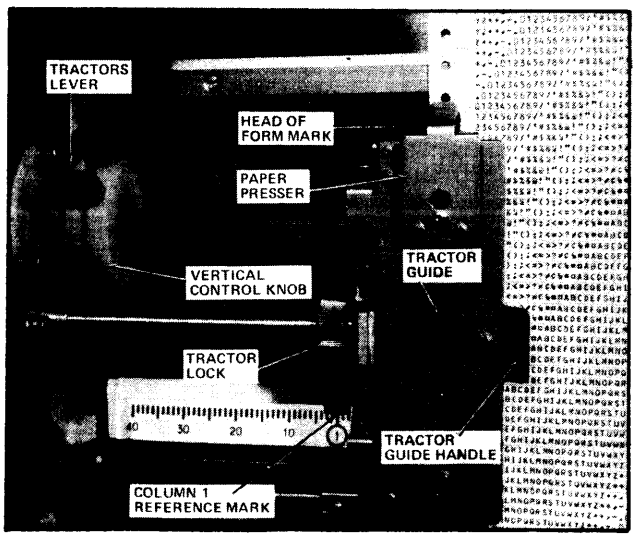

Figure C-21

OPERATION AND MAINTENANCE (Cont'd.)

Paper Loading (Continued)

6. Position left-hand tractor. Tractor must be positioned on reference mark and locked in position unless otherwise specified in operating instructions. Both left-and-right hand tractors can be moved independently by loosening their tractor locks (Figure C-21).

7. Position right-hand tractor in approximately correct position for paper width, and position center guides evenly between tractors. For narrow paper it may be necessary to pull off one of these guides (Figure C-22).

8. Open tractor guides by pulling tractor guides handle and position paper with its fold so that top of paper is in stacker (refer to "Stacker Control") and a fold is near head-of-form mark on the printer. Close tractor guides and check that paper is taut (Figure C-23). If not taut, adjust right-hand tractor and then lock into position.

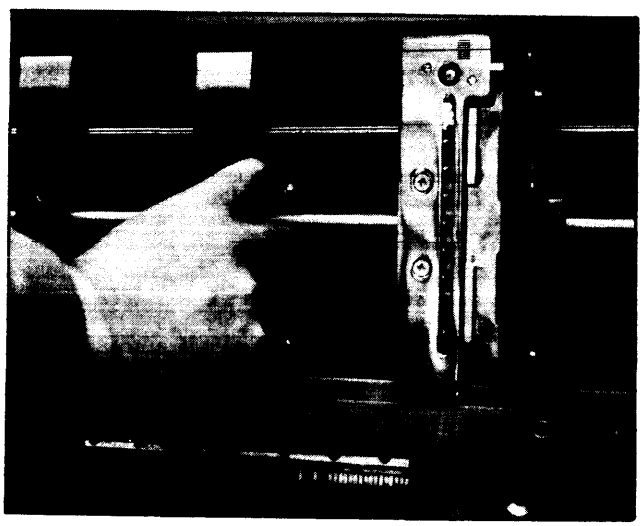

Figure C-22

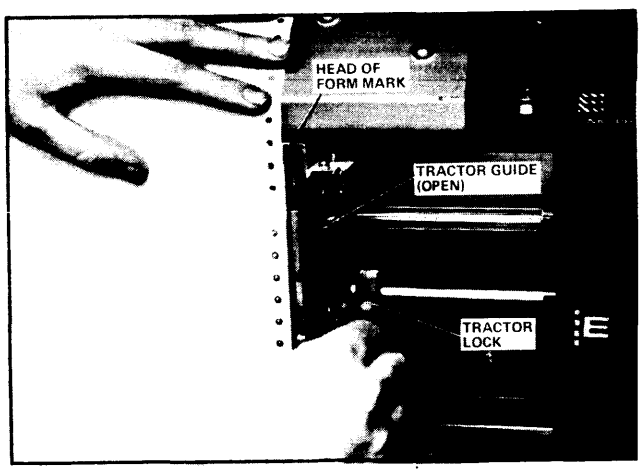

C-23

Paper Loading (Continued)

9. By turning vertical control knob, adjust paper so that fold coincides with head-to-form mark (Figure C-23).

10. If necessary, adjust horizontal positioning by turning horizontal control knob (Figure C-24). PAPER POSITION indicator illuminates unless paper is correctly positioned.

11. Close belt gate.

12. Set paper thickness control according to paper thickness. When set correctly, both indicator lamps will be off (Figure C-25). If an indicator lamp is illuminated, move paper thickness control all the way to rear, and then slowly move it forward until indicator A is extinguished. If indicator B is illuminated, start step 12 over again.

13. Reengage tractors lever (Figure C-2).

14. Close doors and press START.

OPERATION AND MAINTENANCE (Cont'd.)

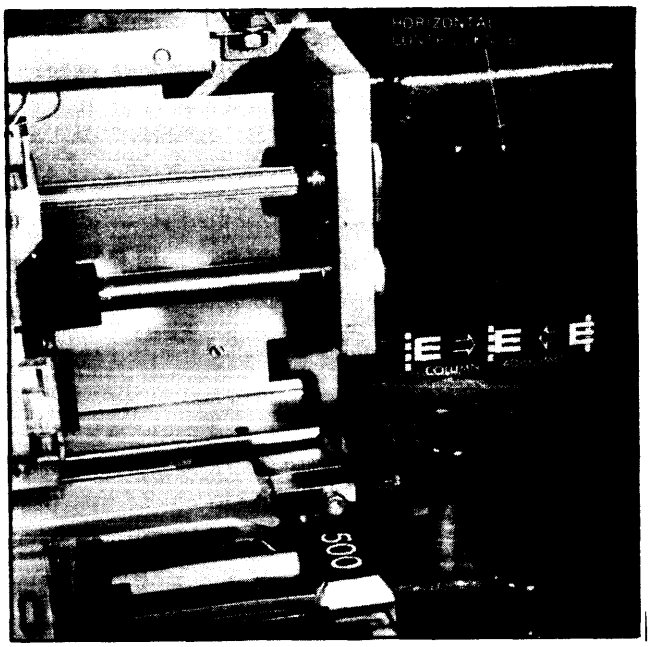

Figure C-24

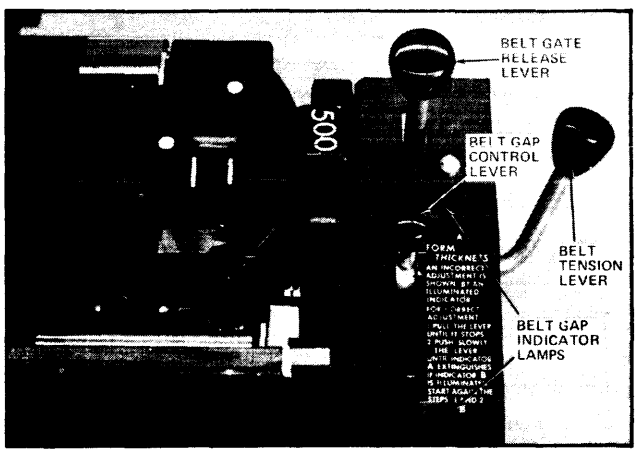

Figure C-25

OPERATION AND MAINTENANCE (Cont'd.)

Print Test

After loading the paper, check the paper alignment by pressing the PRINT TEST push button. A line of Es is printed, after which the device goes into the standby state and the PRINT CHECK indicator illuminates. Adjust the paper position and repeat the operation until satisfied with the alignment; then press START.

NOTE: The PRINT TEST push button is active on only Level 66 and 68 systems.

Stacker Control

The high speed of the printer necessitates the use of a dynamic stacking mechanism for the printer output. The PRU1200/ 1600 has a fully soundproofed, easily-movable stacker which is attached by magnets to the rear of the printer cabinet (Figure C-26). The paper comes out the rear of the printer between the tension rollers onto the stacker table. Rotating paddles ensure correct folding of the paper (FIgure C-27). The stacker is activated as soon as printing begins.

When loading paper onto the printer, pass the paper from the rear of the printer between the tension rollers (Figure C-28). Adjust the paper height control (FIgure C-28) for the correct form height in inches and is located inside the front left-hand side of the stacker. Raise the stacker table by pulling it up. Set the NORMAL/SPECIAL switch to NORMAL for lightweight to medium-weight paper or to SPECIAL for mediumweight to heavyweight paper.

As paper is stacked, the stacker table automatically descends. When full, the STACKER ALERT indicator illuminates on both control panels and the device goes into the standby state.

Before removing paper from the stacker table, put the device into the standby state, if it is not already in this state, by pressing STOP. To remove paper from the stacker table, press SKIP to eject the last printed sheet from the printer station, and then tear the paper along a fold and press the CLEAR PAPER push button on the auxiliary control panel. This causes the tension rollers to rotate and stack the last few forms. Press the LOWER TABLE push button on the rear control panel until it is possible to reach and remove the printed forms.

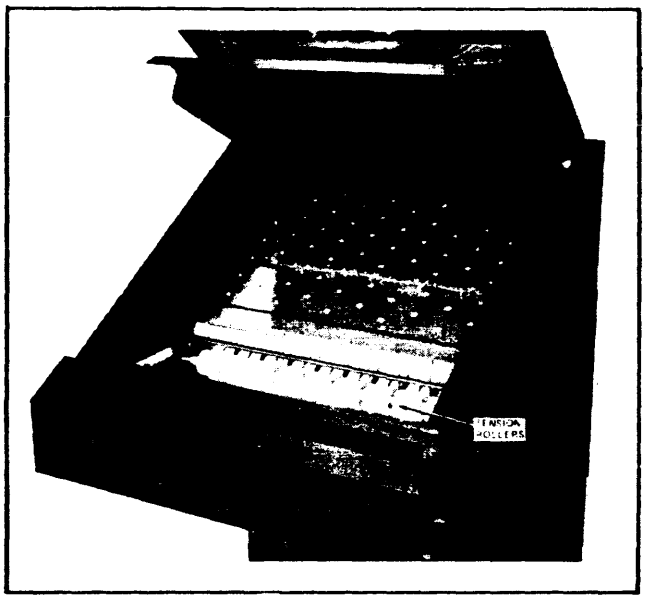

Figure C-26

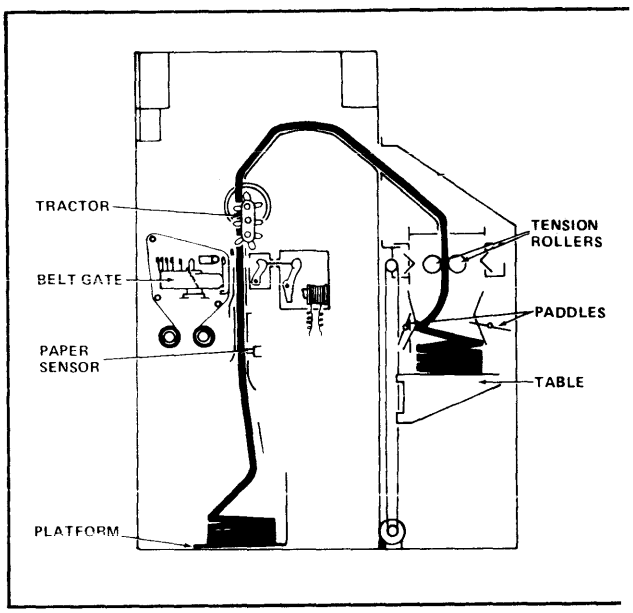

Figure C-27

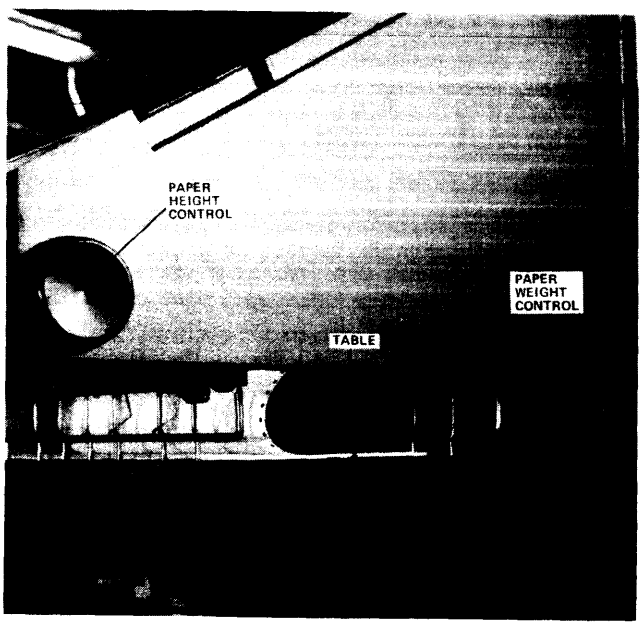

Figure C-28

Changing Print Ribbon

To change the ribbon:

1. Open front doors and then open ribbon door, which covers front of belt gate (Figure C-2Ø) by pulling on right-hand side. (The ribbon door separated from the belt gate is shown in Figure C-37).

2. Remove old front ribbon spool (Figure C-3Ø) and place on cartridge (Figure C-31).

3. Place one of new ribbon spools on front mandrel and other new spool on cartridge (Figure C-32).

4. Open belt gate by pulling release lever (Figure C-25).

5. Separate paper track gate from belt gate (Figure C-33).

6. Remove second old ribbon spool and place in empty carton (Figure C-34).

7. Before installing a new ribbon, wipe both side of anti-smudge shield (Figure C-35), belt deflector (Figure C-34 and ribbon sensors (Figure C-34) using a Honeywell C-34 approved general cleaner.

8. Place second new ribbon spool on rear mandrel (Figure C-36).

9. Wind up any loose ribbon.

1Ø. Close paper gate, belt gate, ribbon door, and front doors.

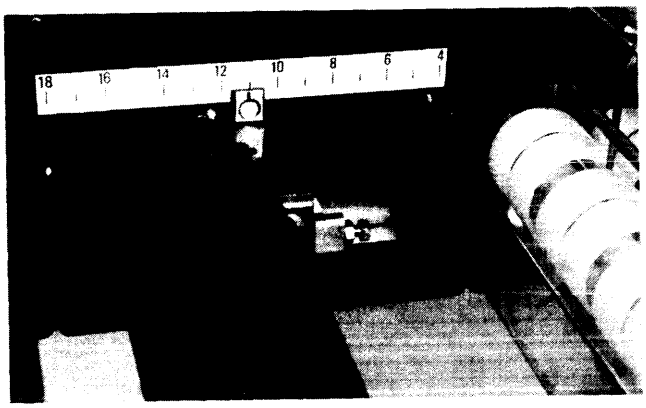

Figure C-29

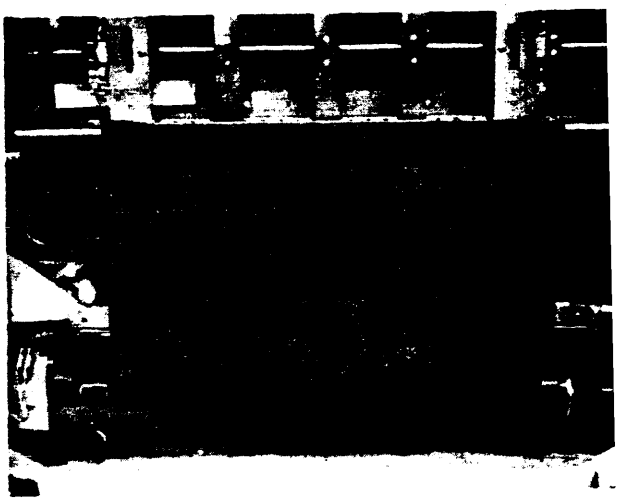

Figure C-30

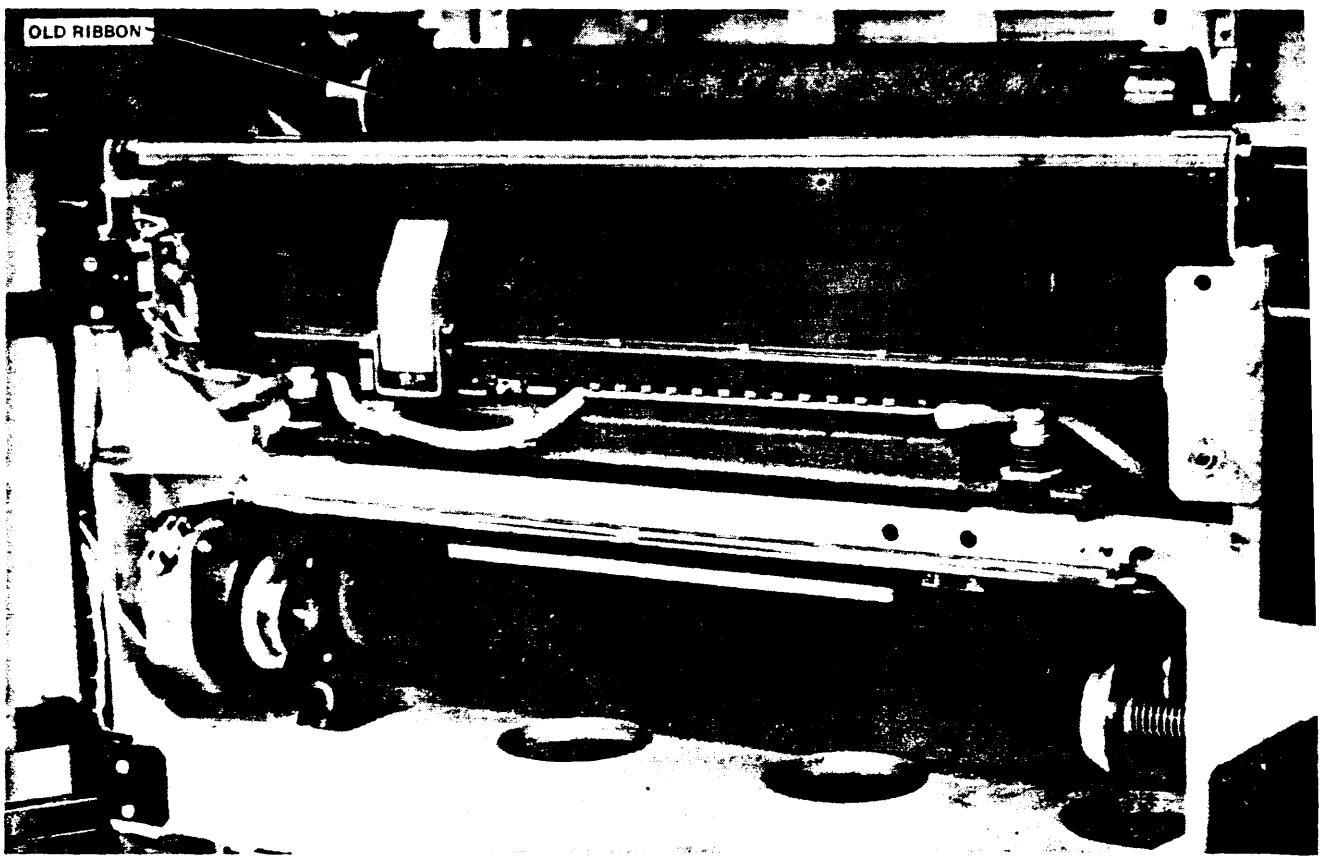

Figure C-31

OPERATION AND MAINTENANCE (Cont'd.)

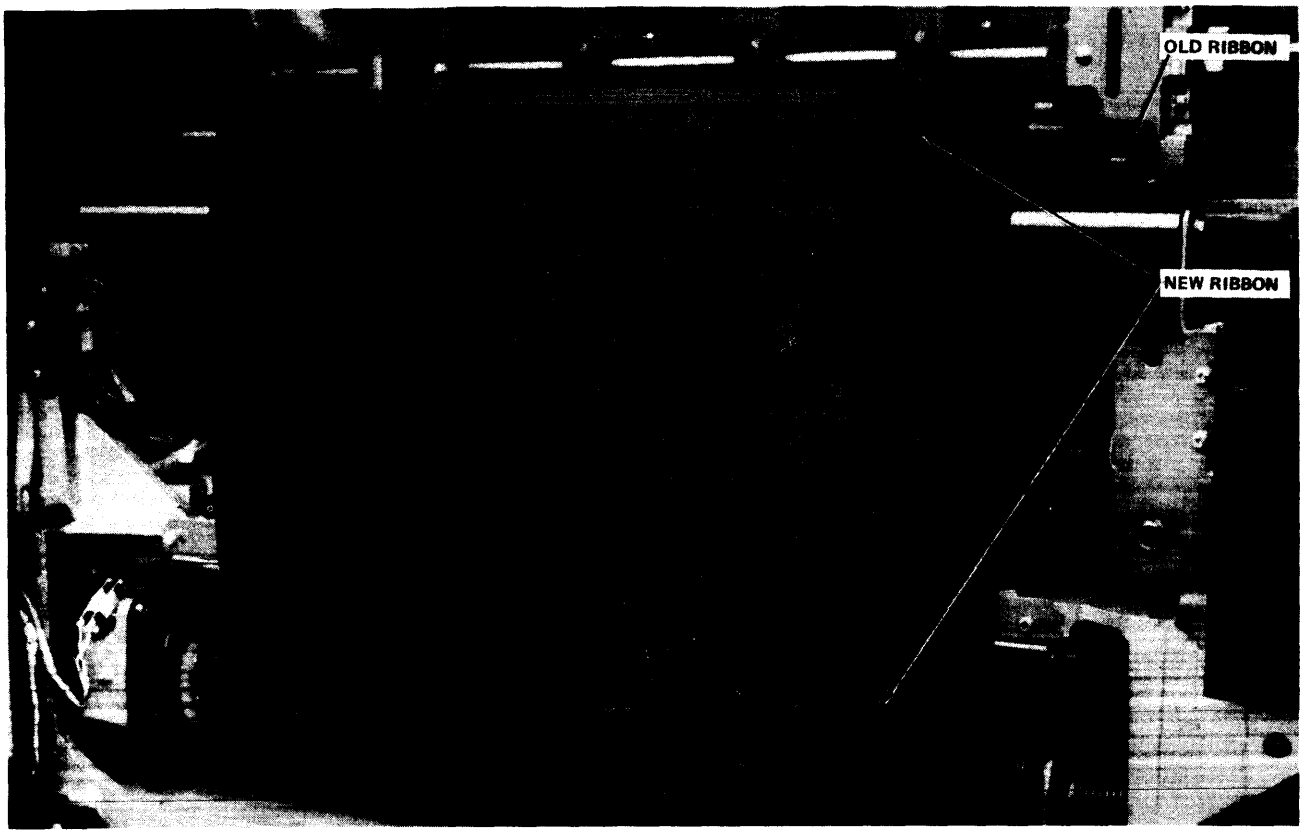

FIGURE C-32

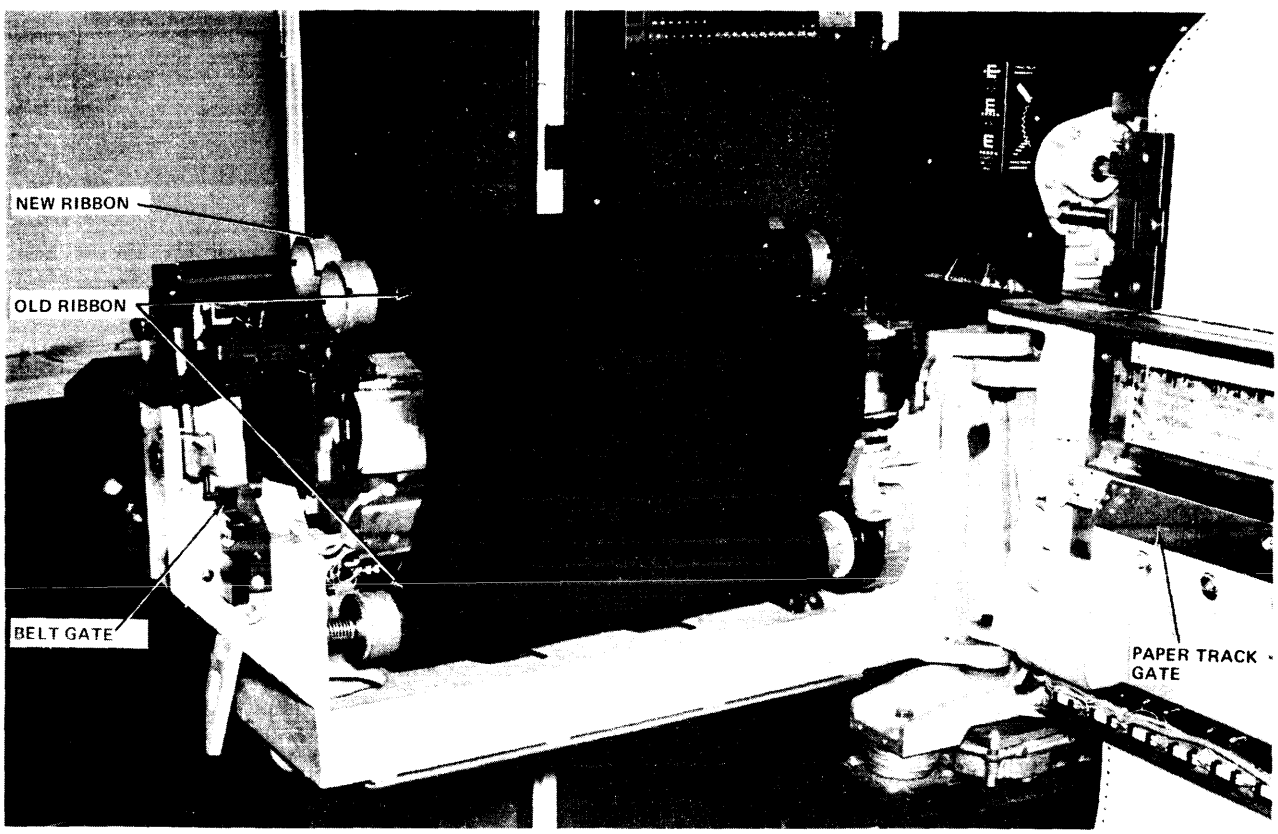

FIGURE C-33

OPERATION AND MAINTENANCE (Cont'd.)

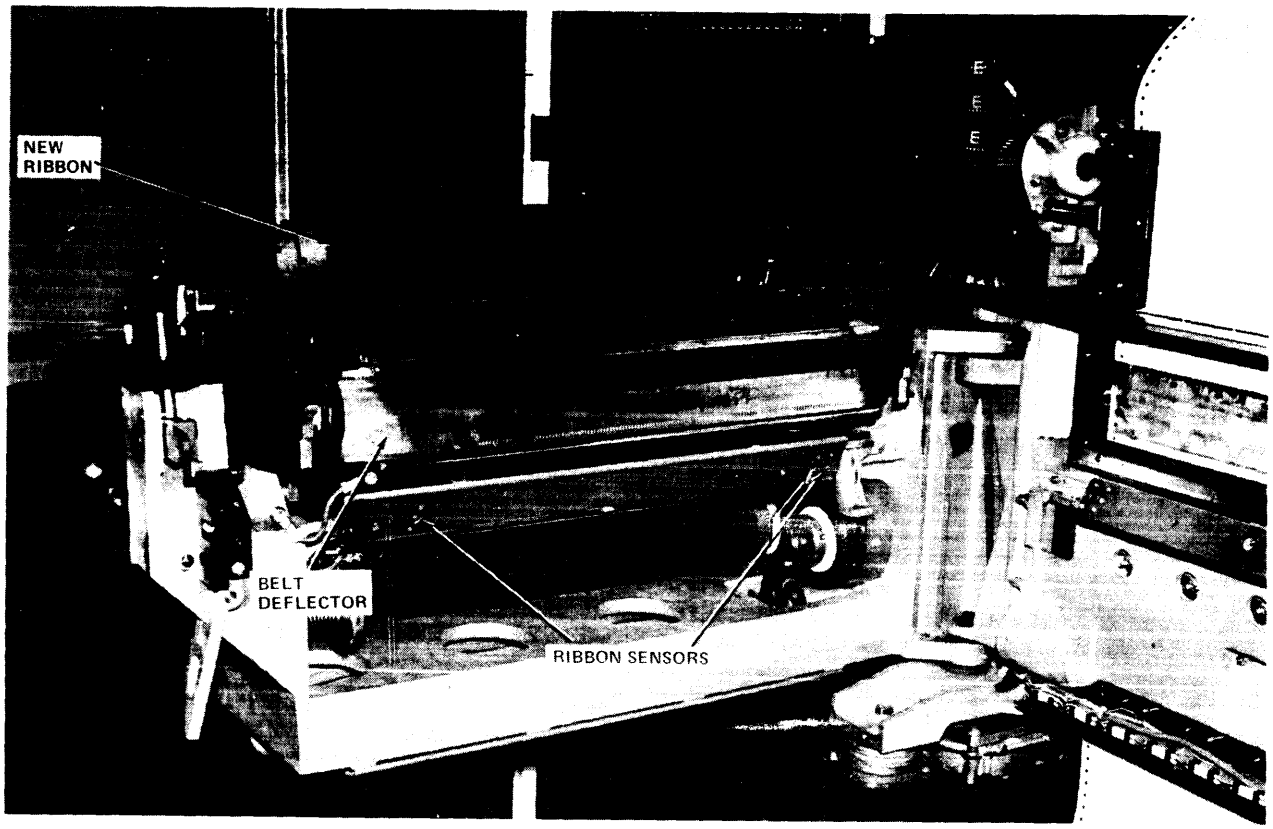

Figure C-34

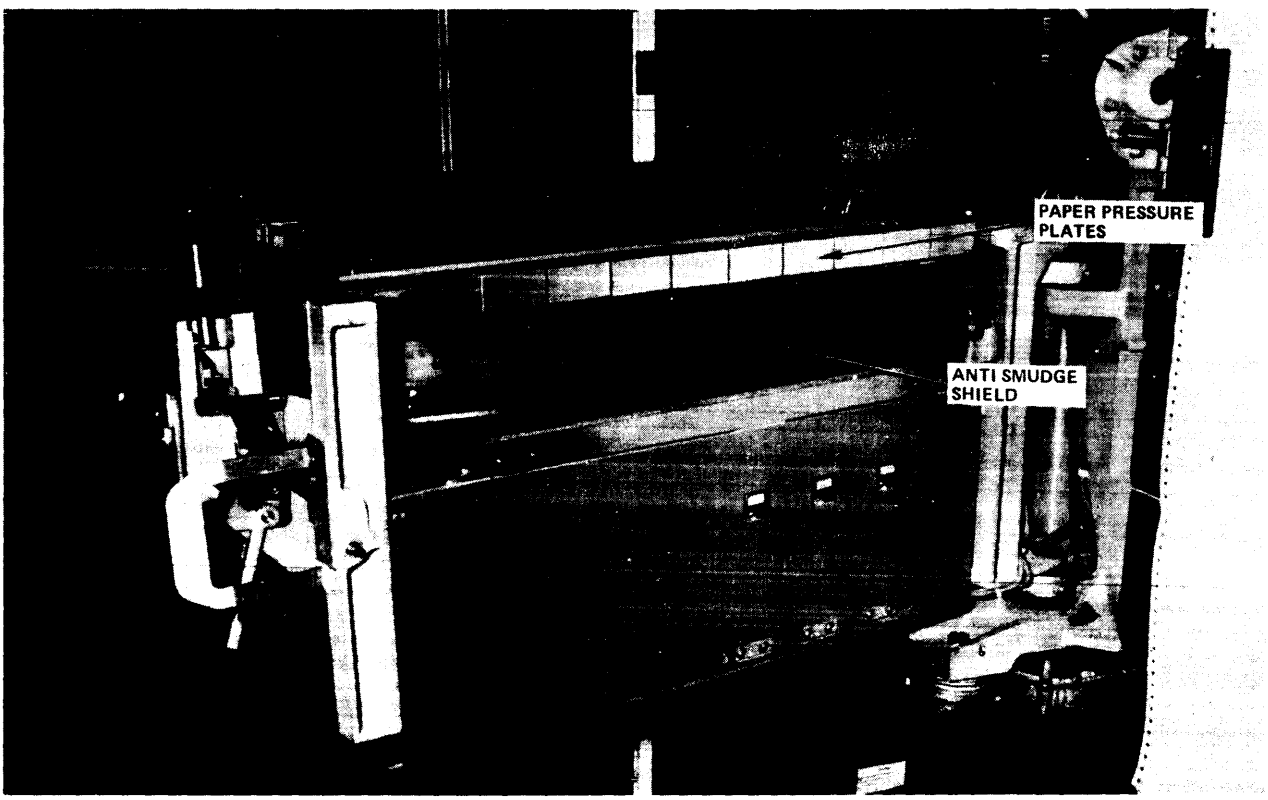

Figure C-35

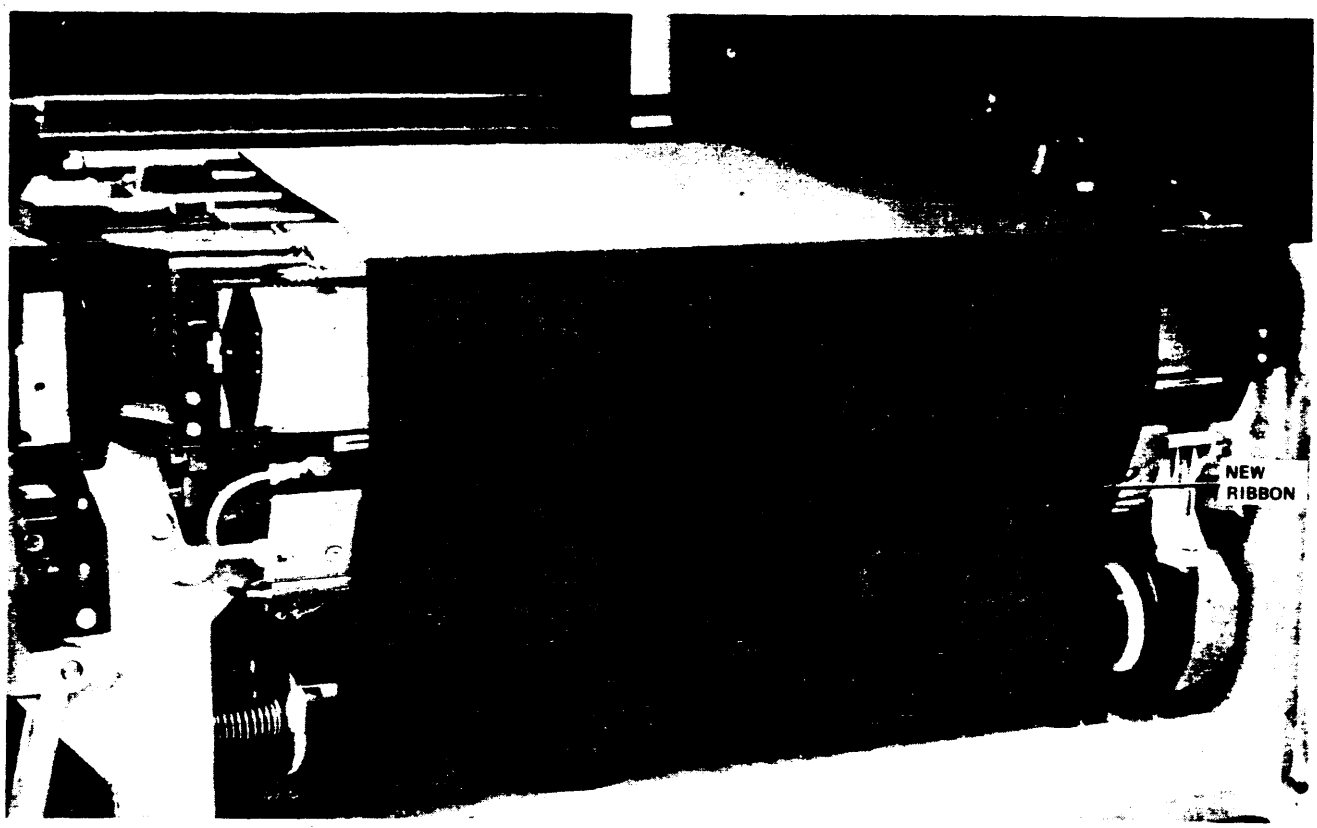

Figure C-36

Changing/Adjusting Print Belt Cartridge

Change/adjust the cartridge either after a console message or after the illumination of the CARTRIDGE indicator on the control panel. An interlock mechanism is provided to ensure that the steps in loading a cartridge are performed in the correct sequence.

NOTE: No force is required for any of the following steps. If any of the steps are difficult, check that the preceding step has been executed correctly.

To change the cartridge:

1. Remove print ribbon according to steps 1, 2, 4, 5, and 6 of "Changing Print Ribbon."

2. Insert belt adjusting key into slot.

3. Slowly turn key to center locking position.

4. Close cartridge cover to protect belt and also to gain access to cartridge handle (Figure C-37).

OPERATION AND MAINTENANCE (Cont'd.)

To change the cartridge (Cont'd.)

5. Move tension level counterclockwise to release belt (Figure C-38).

6. Lift cartridge handle.

7. Pull cartridge out vertically by its handle (Figure C-39).

8. Insert new cartridge.

9. Close cartridge handle.

10. Move tension lever downward in clockwise direction to lock cartridge in place.

11. Open cartridge cover. (Belt gate cannot be closed until cover has been opened.)

12. Rotate belt one turn with your fingers on rollers. (Belt moves left to right only.)

13. Replace print ribbon according to steps 3, 7, 8, and 9 of "Changing Print Ribbon."

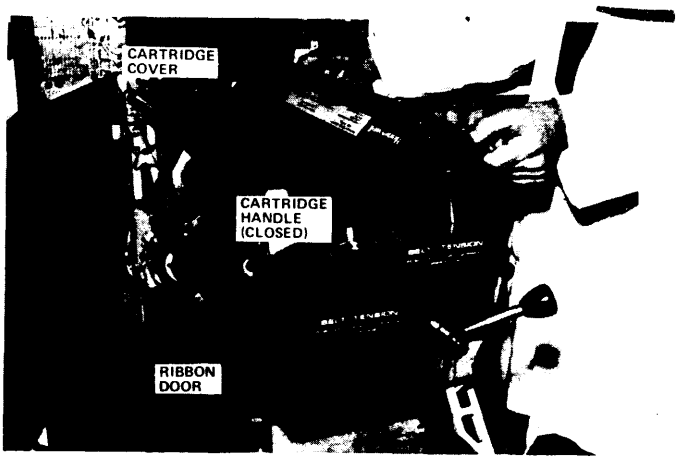

Figure C-37

Figure C-38

OPERATION AND MAINTENANCE (Cont'd.)

To adjust the cartridge:

1. Open front doors.
2. Open belt gate.
3. Insert belt adjusting key (Figure 3-21).
4. Slowly turn adjusting key until belt lever incident indicator extinguishes and key encounters locking position.
5. Remove adjusting key and place it in its holder.
6. Close belt gate.
7. Close front doors.

Figure C-39

PRU Ø9Ø1 PRINTER

The PRUØ9Ø1 is a high-speed belt printer that can produce clear printed characters at a speed of 9ØØ lines per minute with a 64-character print belt. Designed to help meet current and future needs of the data processing user, the PRUØ9Ø1 features:

- Excellent print quality
- High throughput and reliability
- Operator efficiency
- Improved system availability
- Versatility
- Quiet operation

EXCELLENT PRINT QUALITY

Smearless printing and precise alignment of printed characters are achieved through the use of a print belt that is well suited for jobs demanding high-quality appearance.

Each character on the print belt is mounted on a flexible "finger". During printing, the belt passes continuously at high speed in front of the print hammers. When a character is struck, the flexibility of the finger causes the character to be immobilized at the moment of impact. This elimination of drag helps produce smearless, ghost-free, printed copy.

Depending upon the paper stock being used, an original and up to five cabron copies can be produced.

PRU 0901 PRINTER (Cont'd.)

HIGH THROUGHPUT AND RELIABILITY

The rated print speed of the PRU0901 is 900 lines per minute for continuous single-spaced operation with a 64-character set. The printer features an operator-selectable paper skip speed of 25 or 44 inches per second and software-controlled vertical line spacing of 6 or 8 lines per inch.

Longer ribbon life is possible as a result of reduced ribbon drag during the printing process. Also, the life of the printer itself can be extended by an Automatic Standby feature that deactivates the operating mechanism of the device when it is not being used.

OPERATOR EFFICIENCY

Operator efficiency can be improved through the automatic paper stacker which is included with the printer, the simplicity of paper loading and ribbon changing, and the quick and easy exchange of the lightweight, earily accessible belt cartridges. A special re-inking feature in the ribbon cartridge helps to reduce ribbon changes. Loading procedures and adjustments are clearly illustrated on diagrams located next to the controls. Clear, color-coded displays (reporting by exception) are visible only when active. Improved acoustical design results in quiet and efficient operation.

IMPROVED SYSTEM AVAILABILITY

Software control of online error status reporting helps reduce:

- System time required for diagnosis.
- Unit time required for offline repair.
- Service calls.

VERSATILITY

A variety of character sets are available for the PRU0901.

To provide for future system needs, this device can be upgraded onsite (via PRK0901) to a PRU1201, which operates at 1200 lpm.

PRU0901 PRINTER (Cont'd.)

PRINT BELTS

The print belt is packaged in a lightweight cartridge to facilitate removal, interchange, and storage. The system is programmed to recognize the belt being used from a code on the belt.

Two identical print belts and a power stacker are supplied with the device. One of the following belt types must be specified when ordering.

Marketing Identifier	Characters	Character Set
PRB3213	64	ASCII uppercase (optimized)
PRB3300	96	ASCII uppercase/lowercase (optimized)
PRB3500	64	Series 400/600/6000/Level66
PRB3501	64	IBM
PRB3513	64	ASCII (uppercase only)
PRB3524	64	OCR-A numeric
PRB3549	64	OCR-A alphanumeric
PRB3600	96	ASCII (upercase/lowercase)
PRB3703	64	Series 200/2000

RIBBONS

The PRU0901 uses a 2-inch-wide, 50-meter-long nylon ribbon having a ribbon life of approximately 70 million lines.

SPECIFICATIONS

PRINT SPEED: 900 lines per minute for continuous single-spaced line operation with a 64-character belt.

DATA FORMAT:

Print positions per line - 136
Characters per inch - 10
Vertical Spacing - 6 or 8 lines per inch

REPRODUCTION SYSTEM: Hammer stroke against flexible belt "finger"

PROGRAMMED OPERATIONS: Print and space, space only, skip, and vertical line spacing

PRU0901 PRINTER (Cont'd.)

PAPER STOCK:

Width - 4.0 inches (10.2 cm) to 19.0 inches (48.3 cm)
Length - 3.0 inches (7.6 cm) to 11.0 inches (27.9 cm)
Weight (single-part form) - 15 lb to 45 lb card stock
Multiple copies - 1 original and up to 5 carbon copies

PHYSICAL CHARACTERISTICS:

Height 39.4 inches (100.1 cm)
Width 35.4 inches (89.9 cm)
Depth 27.6 inches (70.1 cm)
Weight 375 lbs (170 kg)

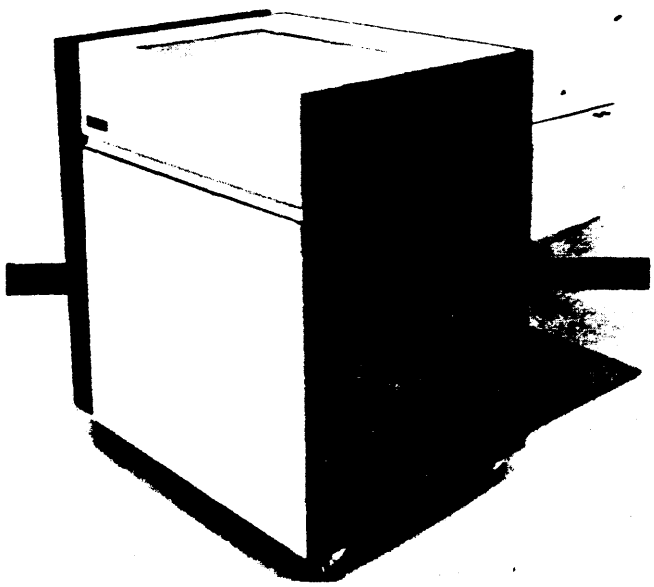

Figure C-40

HONEYWELL LARGE SYSTEMS

HIGH-SPEED LINE PRINTER

DESCRIPTION

The PRU12Ø1 high-speed line printer is designed to produce clear printed copy at a speed of 12ØØ lpm with a 64-character set. The printer features a dual paper skip speed of 44 and 25 ips. Vertical line spacing is six or eight lines per inch. Depending upon the paper stack being used, one original and up to five carbon copies can be printed.

FEATURES

- Operator-selectable dual paper skip speeds of 25 ips and 44 ips.
- Software control on online error status reporting to help reduce system time required for diagnosis and device time required for offline repair.
- Automatic standby feature to deactivate the operating mechanism of the printer when it is not being used.
- Improved operator efficiency through an automatic paper stacker, simple paper loading and ribbon changing procedures quick and easy exchange of lightweight belt cartridges, and clear color-coded displays.
- Programmable vertical format control.

MARKETING IDENTIFIER

PRU12Ø1 - Belt Printer, 12ØØ lpm

SPECIFICATIONS

Performance Characteristics

Paper Size:

Width - 4.Ø inches (1Ø.Ø cm) to 19.Ø inches (3Ø.4 cm)
Length - 3.Ø inches (7.6 cm) to 11.Ø inches (27.9 cm)
Weight - Single-part form, 15 to 45 lb card stock
Multiple Copies - 1 original and up to 5 copies

Print Speed:

64-character set - 12ØØ lpm
96-character set - 94Ø lpm
128-character set - 615 lpm

HONEYWELL LARGE SYSTEMS

HIGH-SPEED LINE PRINTER (Cont'd.)

Specifications (Cont'd.)

Paper Slew Speed: 25 or 44 ips

Line Advance Time:

14.Ø ms - 6 lines per inch
12.5 ms - 8 lines per inch

Character Set: 64, 96, or 128

Columns Per Line: 136 (1Ø characters per inch)

Vertical Line Spacing: 6 or 8 lines per inch.

Physical Characteristics

Height: 39.4 inches (1ØØ.Ø cm)
Width: 35.4 inches (89.9 cm)
Depth: 27.6 inches (7Ø.1 cm)
Weight: Printer - 375 lbs (17Ø kg)
Stacker - 88 lbs (4Ø kg)

Electrical Characteristics

Voltage: 12Ø VAC, single phase
Frequency: 5Ø or 6Ø Hz
Power Consumption: 7ØØ Watts

Environmental Characteristics

Operating Temperature: 5Ø-to-1ØØ degrees F (1Ø-to-38 degrees C)

Relative Humidity: 1Ø% to 8Ø% (noncondensing)

Cables (max)

PRT to URP: 5ØØ ft (152 m)
Power Cord: 13 ft (4 m)

HONEYWELL LARGE SYSTEMS

HIGH-SPEED LINE PRINTER (Cont'd.)

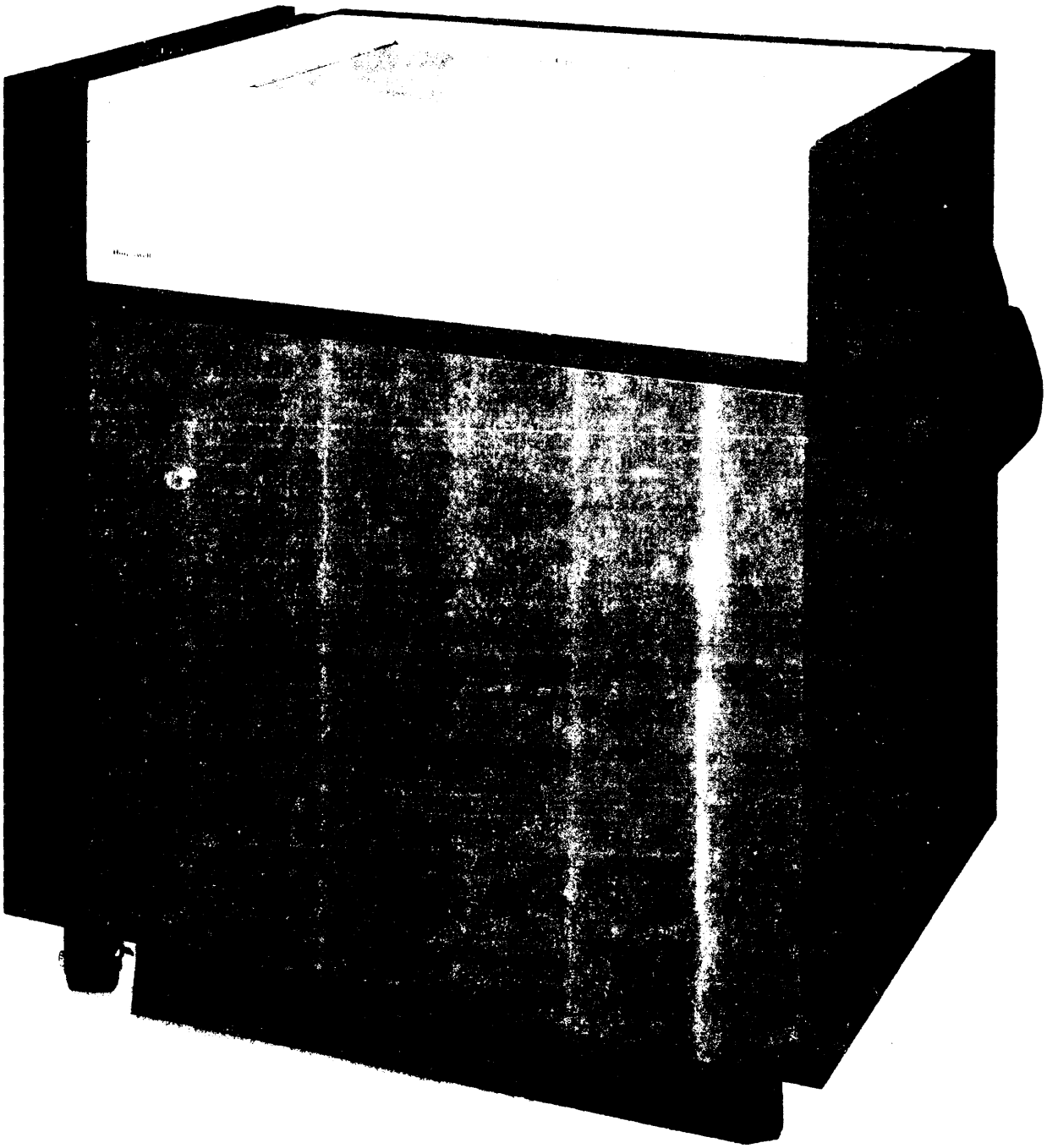

TABLE C-5. OPERATING CONTROLS AND INDICATORS

SWITCH/INDICATOR	COLOR CODE	FUNCTION
AC BREAKER ON*	Red	AC power on/off indicator and control.
POWER ON	Yellow	DC power on indicator and control.
POWER OFF	Green	DC power off indicator and control.
NORMAL/TEST	Green/Yellow	Maintenance Panel NORMAL/TEST switch position indicator (place switch in NORMAL position for normal operation)
READY/TROUBLE	Green/Red	Operational status indicator. TROUBLE is indicated when the MPP is in the HALTED state, the maintenance panel OFFLINE/ONLINE switch is in OFFLINE position, or a logic problem has occurred. If ONLINE is on and pressing the START switch does not set the MPP to READY, notify the local Honeywell service office.
OVERTEMP/ALARM RESET	Red/White	Cabinet overheating indicator and audible alarm warning control. If overheating continues notify the local Honeywell service office.
START	White	MPP HALTED state control. Returns MPP to READY from the HALTED and TROUBLE state.
AUTOMATIC/MANUAL	Green/Blue	Microprogram initialize and halt options indicator and control. These options are inhibited in AUTOMATIC mode.
INT/EXT/CONT STORE	Red/Red/Red	Internal, external, or control store error isolation indicator and control. If error persists, notify the local Honeywell service office.

TABLE C-5. OPERATING CONTROLS AND INDICATORS (Cont'd.)

SWITCH/INDICATOR	COLOR CODE	FUNCTION
OPERATOR INTERRUPT	White	Address/simulate data execution from thumbwheel switch settings. This state is automatically reset by the microprogram.
HALTED	Blue	MPP HALTED/TROUBLE/INITIALIZE status indicator. Press START switch.
INITIALIZE	White	MPP INITIALIZE state indicator and control. MPP is also HALTED.
Address/Simulate Thumbwheels		Hexadecimal addressing and function control. Executed with OPERATOR INTERRUPT switch.
* The cabinet AC circuit breaker is located behind the right front door at the bottom right side on the CKP Panel.		

Mass Storage Control Microprograms (Application Firmware)

Communications between the software and firmware occur in two directions: from the software to the firmware by IDCWs, and from the firmware to the software by special interrupts. The firmware determines the order of execution of the IDCW commands in the command queue. To increase its performance in executing the greatest number of commands per unit of time, the firmware performs bookkeeping functions to allow overlapping of seek commands, executing commands simultaneously (dual channel), and sensing the rotational position of tracks. It keeps track of mass storage unit, CA, and LA, availability, and up-to-date status of the units, CA, and command executions. The firmware synchronizes with track index pulses, finds addressed sectors on tracks, detects if tracks haven't been written, checks seek positioning errors, and performs retrys in case of errors. Special unit-dependent pack change and unit-released interrupts are generated and sent to the central system.

The bookkeeping is done on logical channel and unit tables in the MSP main memory. The logical channel table is divided into 32 blocks, one for each possible logical channel. Each block provides information on the present status of the particular chanle, and each points to the unit tables. The unit tables maintain unit-oriented information, one table for each unit. Each table contains the specific data path required to commun icate with the unit and whether or not the unit is operational. It also contains unit status and special interrupts pending to be sent to the central system.

Special Controls

For the MSP to coordinate properly with the customized mass storage hardware and firmware, the MICROPROGRAM READABLE CONFIG URATION switches located on the MSP maintenance panel must be set by Honeywell field personnel and should not be disturbed or errors will result. The switches, however, are listed in Table C-6 in the event that subsystem reconfiguration is required.

TABLE C-6. MSP CONFIGURATION SWITCHES

Switch Function	Switch Number	Switch Setting[a]	
		Normal[b]	Other
Basic Logic Test (BLT)	Ø	Ø= Execute BLT	1= Bypass BLT
BLT Loop Control	1	Ø= No Loop on BLT	1= Loop on BLT
Select LA Port for Boot	2	Ø= LA Port 2	1= LA Port 3
Number of LA in Subsystem	3	Ø= One LA (Port 2)	1= Two LAs (Ports 2 and 3)
ITRO Detection	4	Ø= Detect ITRO	1= Inhibit ITRO Detection
Device Polling/Trace Entries[h]	4	Ø= Enable Device Allow Trace Entries	1= Disable Device Polling Freeze Trace Table
Select PSI for Boot[h]	5	Ø= PSI-Ø	1= PSI-1
EDAC[c]	6	Ø= EDAC	1= EDAC Bypass[d]
RPS[e]	7	Ø= Disable RPS	1= Enable RPS
Positioner Offset Retrys[f]	7	Ø= Enable Retrys	1= Disable Retrys
Configuration	8,9,1Ø	ØØØ= Non-Crossbar ØØ1= Crossbar 1ØØ= Dual MSP[g]	N/A
Automatic Retry (AR)	11	Ø= Enable AR	1= Disable AR
Unassigned	12	Ø	N/A
Main Memory Size	13	Ø =4K 1= 8K	N/A
Hardware Interrupt	14	Ø= Bypass ITRe	1= Branch to ITR
Unassigned	15	Ø	N/A

[a] Ø = Switch Down. 1 = Switch Up
[b] Unless set otherwise by Honeywell field engineer
[c] Firmware Rev. D or later (191 Firmware)
[d] For problem isolation or request from user
[e] 19Ø Firmware
[f] 191 Firmware or MSPØ6ØØ Series
[g] Appears as two MSPs to Software
[h] MSPØ6ØØ Series

TABLE C-7. MTP 0600/0601/0602 CONFIGURTATION SWITCHES

Switch Function	Switch Number	Switch Setting[a]	
		Normal[b]	Other
Basic Logic Test (BLT)	0	0= Execute BLT	1=Bypass BLT
BLT Loop Control	1	0= No Loop on BLT	1=Loop on BLT
LA Port Select for Boot	2	0= LA Port 2	1=LA Port 3
No. of LAs in Subsystem	3	0= One LA (Port 2)	1=Two LAs (Ports 2 and 3)
ITRO Detection	4	0= Detect ITRO	1=Inhibit ITRO Detection
		Device	
Boot MTU Number	5,6,7	001 = 1 010 = 2 011 = 3 100 = 4 101 = 5 110 = 6 111 = 7 000 = 8	(NOT APPLICABLE)
MTP Comnfiguration	8,9,10	MTP0600 010 = SC 011 = DC MTP0601/0602 000 = SC(LA0,CA0) 010 = SC(LA0,CA1) 100 = SC(LA1,CA0) 110 = SC(LA1,CA1) XXI = DC	
Boot MTU Tape Density	11	0 = 556 bpi	1=800 bpi
Auto Hardware Retry	12[c]	1 = Bypass Retry[d]	0=Auto Retry[e]
Main Memory Size	13	1 = 4K 0 = 4K[f]	0=2K 1=8K[g]
Hardware Interrupt	14	0= Bypass ITRT	1=Branch to ITR
Clock Margintrol	15	0= Clock Normal	1=Clock Margin

[a]0 = Switch Down, 1 = Switch Up
[b]Unless otherwise specified by other operating conditions
[c]Applicable with Rev. G and up Firmware
[d]Applicable with pre F8 software
[e]Applicable with F8 and up software
[f]SC = Single Channel; DC = Dual Channel
[g]Applicable with AA and up firmware

TABLE C-8. MTP CONFIGURATION SWITCHES

Switch Function	Switch Number	Switch Setting[a]	
		Normal[b]	Other
Basic Logic Test (BLT)	Ø	Ø= Execute BLT	1=Bypass BLT
BLT Loop Control	1	Ø= No Loop on BLT	1=Loop on BLT
Unassigned	2	Ø	N/A
Trace/ Bootload Stopclock	3	Ø = Inhibit Trace & Enable Stopclock	1=Enable Trace & Inhibit Stopclock
Bootload MTU Address	4-7	ØØØØ=MTU16 ØØØ1-1111=MTU1-MTU15	
Unassigned	8	Ø	
Select CA	9,1Ø	ØØ=CA0,Single Channel MTP Ø1=CA0,Dual Channel MTP 1Ø=CA1,Single Channel MTP 11=CA1,Dual Channel MTP	N/A
Unassigned	11	Ø	
Read Error Retry	12	Ø=Inhibit Retry	1=Allow Retry
Main Memory Size	13	Ø = 4K 1 = 8K	N/A
Hardware Interrupt	14	Ø=Bypass ITR	1=Branch to ITR
Factory Use Only	15	Ø	N/A

[a]Ø = Switch Down, 1 = Switch Up
[b]Unless otherwise specified by other operating conditions

CONTROLS AND INDICATORS

MAGNETIC TAPE UNIT CONTROL PANEL

The controls and indicators on the control panel for the MTU0400/0500 magnetic tape units are shown in Figure C-42. A description of the function of each indicator and control follows the figure. Indicators are visible only when illuminated.

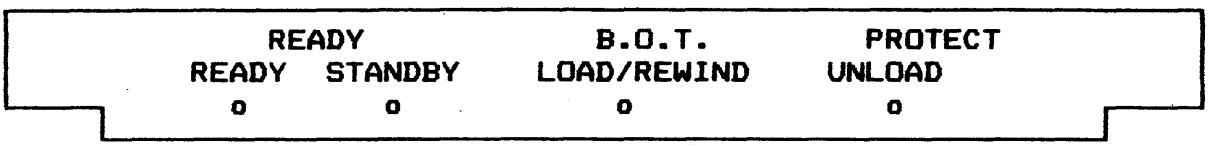

Figure C-42. MTU0400/0500 Control Panel

READY (Indicator)	Illuminates whenever the unit is ready to execute read/write commands, after the unit has successfully completed a load operation or a load tape command.
B.O.T. (Indicator)	Indicates tape is at beginning of tape.
PROTECT (Indicator)	Illuminates when powered up and when a tape reel does not have a write-permit ring.
READY (Push button)	Puts the tape unit into ready state.
STANDBY (Push button)	Removes the unit from ready state and raises the power window.
LOAD/REWIND (Push button)	Initiates load or rewind.
UNLOAD (Push button)	Used to unload the tape and lower the power window.

Figure C-43 shows the MTU0600 control panel. A description of the function of each indicator and control follows the figure. Again, indicators are visible only when illuminated.

CONTROLS AND INDICATORS (Cont'd.)

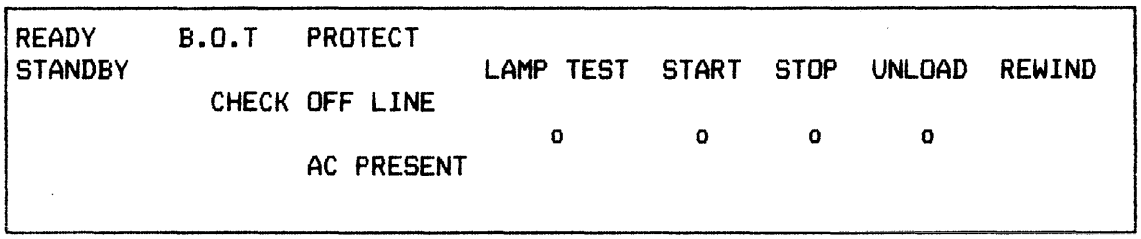

Figure C-43. MTU0600 Control Panel

READY (Indicator)	Indicates tape is loaded and vacuum is on, no current device malfunction or internal errors exist, and the unit is fully operational and ready to execute read/write commands from the MTP0601.
B.O.T (Indicator)	Indicates tape is at beginning-of-tape.
PROTECT (Indicator)	Illuminates when powered up and when a tape reel does not have a write-permit ring.
AC PRESENT	Illuminates when AC power is applied to the unit.
STANDBY (Indicator)	Indicates tape is not loaded or present, the STOP button was pressed or a device malfunction has occurred.
CHECK (Indicator)	Indicates an internal fault condition.
OFF LINE (Indicator)	Indicates the unit is offline due to an internal condition or Field Engineering procedure.
LAMP TEST (Push button)	Used to illuminate all operator visible indicators to check for defective bulbs.
START (Push button)	Used to place the unit in the ready state.
STOP (Push button)	Used to place the unit in the standby state or stop tape motion.
UNLOAD (Push button)	Used to unload the tape and lower the power window.
REWIND (Push button)	Used to rewind tape to beginning of tape.

CONTROLS AND INDICATORS (Cont'd.)

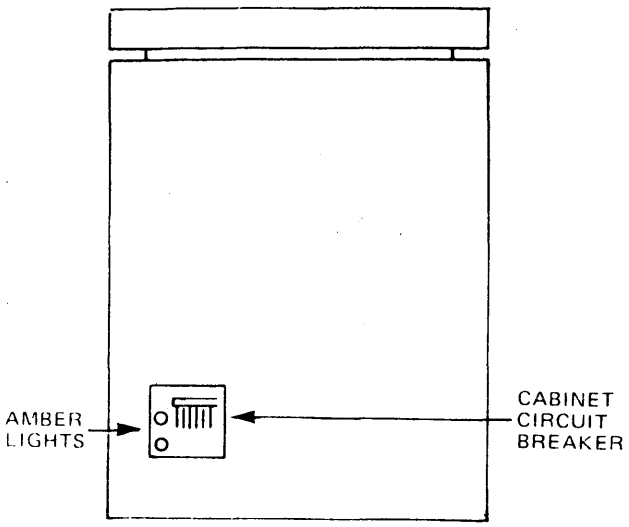

Figure C-45

POWER

Power is controlled by a circuit breaker located at the rear of the tape unit (see Figure C-45). There is a cutout on the back door that makes the circuit breaker accessible without having to open the door. When the circuit breaker is set to "on", the transport illuminates (indicating the availability of power) and the tape transport window opens.

OPERATION AND MAINTENANCE

This section is separated into two parts: the first part details the routine as well as the exceptional operating procedures; the second part explains the operator's tasks involved in preventive maintenance. To minimize the possibility of error or damage to the tapes, it is important that the operator understand the use and function of the various controls and indicators previously explained.

OPERATING PROCEDURES

File Protection

Unintentional writing on magnetic tape is prevented by two methods:

1. Tape unit sensing the absence of a write permit ring.

2. Tape unit entering the write protect mode via program control (or via operator's console command language).

The first method is implemented by the operator by simply removing the write permit ring from a tape reel when operating instructions so dictate; the second method is implemented by the programmer when coding the program.

If a tape unit is to be used for reading (input) only, the write permit ring should be removed to avoid any possibility of unintentionally writing on the tape mounted on that unit (whether by programmer error, device malfunctions, or operator error). The write permit ring on the tape reel permits writing on that reel of tape.

The write permit ring is installed in a groove on the back of the tape reel (see Figure C-44). When the ring is in position, new information can be written onto the tape. To mount the write-permit ring, orient the ring to the correct position and press it firmly into place. No special tools are required. If the ring is not present, the tape unit can only read from that tape.

Power-Up Sequence

In the following procedure, it is assumed that all cables have been properly connected and secured and that power is applied to the unit(s).

1. Set the circuit breaker located at the rear of each tape unit to the up or "on" position.
   AC PRESENT and STANDBY indicators illuminate.

2. Perform normal operations.

Tape Loading and Automatic Tape Threading

NOTE: During a load, unload, and rewind operation, the unit is always in PROTECT.

With Cartridge

1. Press the UNLOAD button to lower the window.

2. Place the closed cartridge onto the reel mounting hub.

   - Make sure the index tabs on the cartridge fit into the corresponding receptacles on the tape unit.

3. Set the SEMI/AUTO switch to AUTO.

4. Remove hands from the tape compartment.

5. Press the START button (the LOAD/REWIND button on the MTU0400/0500).

   - When the air pressure in the tape unit reaches operating level, the reel automatically locks onto the hub; the window raises; the cartridge is automatically opened and tape feeds and threads itself onto the tape-up reel with some tape dropping into the loop chambers; and upon detection of the BOT marker, the tape stops. BOT and READY indicators illuminate.

6. Perform normal operations.

CONTROLS AND INDICATORS

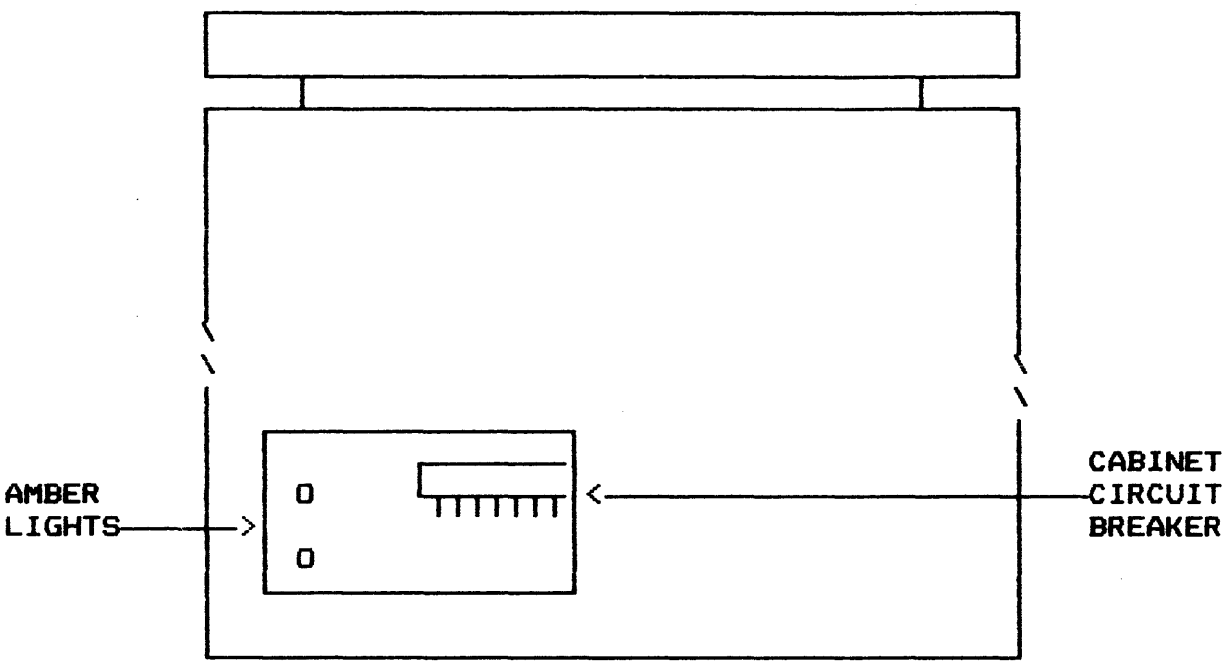

Figure C-45. Review View of Tape Unit

SEMI/AUTO SWITCH

A two-position toggle switch, SEMI/AUTO is located on the transport directly above the supply reel (Figure C-46). The two-position toggle switch is used only when difficulty has been incurred in the automatic feeding and threading of tape. It is also used with 10-1/2 inch diameter reels having less than 1200 feet of tape or any reel smaller in outside diameter than 10-1/2 inches. Setting the switch to SEMI (semiautomatic) enables the operator to manually feed and thread the tape up to the take-up reel. The unit will not cycle up until the switch is returned to the AUTO position. AUTO (automatic) is the setting of the switch during normal operation.

POWER WINDOW SAFETY BAR

The front door contains a safety bar at the top that, if tripped, instantly lowers the window. The safety bar is actuated if anything is on top of the window glass during window closure. It is designed into the unit to prevent an operator from getting an arm or hand caught in the window or the glass from breaking if something noncollapsible is in the path of the rising window.

INDICATORS AND CONTROLS (Cont'd.)

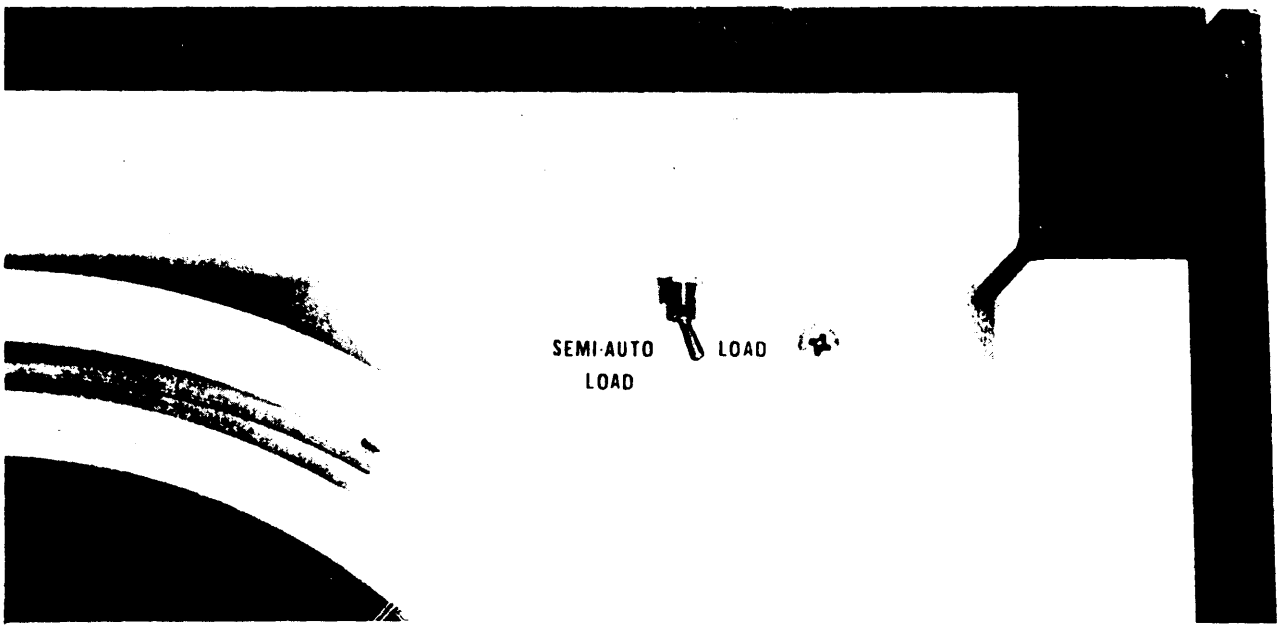

Figure C-46

OPERATION AND MAINTENANCE

Without Cartridge

1. Press the UNLOAD button to lower the window.

2. Place the supply reel onto the reel mounting hub.

   - Handle the reel by the hub and not by the flanges, which are the weakest part of the reel and susceptible to damage.

3. Set the SEMI/AUTO switch to AUTO.

4. Remove hands from the tape compartment.

5. Press the START button (the LOAD/REWIND button on the MTU0400/0500).

   - When the air pressure in the tape unit reaches operating level, the tape reel automatically locks onto the hub; the window raises; the tape automatically feeds and threads itself onto the take-up reel with some tape dropping into the loop chambers; and upon detection of the BOT marker, the tape stops. BOT and READY indicators illuminate.

6. Perform normal operations.

Tape Loading and Manual Tape Threading

1. Press the UNLOAD button to lower the window.

2. Place the reel of tape onto the red mounting hub.

3. Set the SEMI/AUTO switch to SEMI.

4. Press the START button to lock the reel onto the hub (LOAD/REWIND button on MTU0400/0500).

5. Manually thread and feed the tape onto the take-up reel.

   NOTE: If a cartridge is used, rotate the reel until the end of tape (leader) leaves the cartridge and can be grasped.

6. Rotate the take-up reel in a clockwise direction, wrapping about five turns of tape onto the reel.

7. Set the SEMI/AUTO switch to AUTO.

8. Remove hands from the tape compartment as the window rises; the tape drops into the loop chambers; and upon detection of the BOT marker, the tape stops. BOT and READY indicators are illuminated.

9. Perform normal operations.

Assigning Magnetic Tape Devices

For Level 64 systems, the operator can assign magnetic tape devices to program files, if so instructed by the programmer, via a console command language. This language enables the operator to specify:

Assigning Magnetic Tape Devices (Cont'd.)

- The density at which the tape(s) is to be read/written
- Whether or not writing is permitted on the device
- Standard address/symbolic device name assignments

These procedures are detailed in the following publication:

- Series 60 Level 64 Series 200/2000 Compatibility Mode Operators' Guide, Order No. AP16

For Level 66 and 68 systems, the above mentioned procedures are entirely assigned by the programmer via the Job Control Language (JCL) cards.

Tape Unloading

1. Press the STOP button (STANDBY button on MTU0400/0500).
   - The STANDBY indicator illuminates.
2. Press the UNLOAD button.
   - The tape rewinds and continues until low tape enables light to be sensed by the reel sensor. At this point, the tape decelerates to the normal read/write speed and continues at this rate until the BOT marker is sensed. The BOT indicator illuminates and the tape stops momentarily.
   - The supply reel proceeds to pull tape out of the loop chambers. When all the tape has been rewound onto the supply reel, the tape unit shuts down. With pressure removed from the system, the supply reel is released from the hub and the power window automatically lowers.

Tape Unloading (Cont'd.)

3. Remove the tape reel from the tape unit.

NOTE: A recommended practice in keeping the tape transport free of dirt and dust is to keep the transport window closed whenever the tape unit is not in use.

Alert Conditions and Recovery Procedures

The following is a list of alert conditions and the corresponding recovery procedures.

Alert Condition	Recovery Procedure
Tape thread failure	Damaged leaders are the usual cause of failure to thread. Remove all folds and creases in leader and cut square with scissors or leader crimp tool. For satisfactory canister operation the leader should have 2000 to 2400 feet of tape. If this procedure fails, thread and notify the Field Engineer. (Refer to Figure C-47).

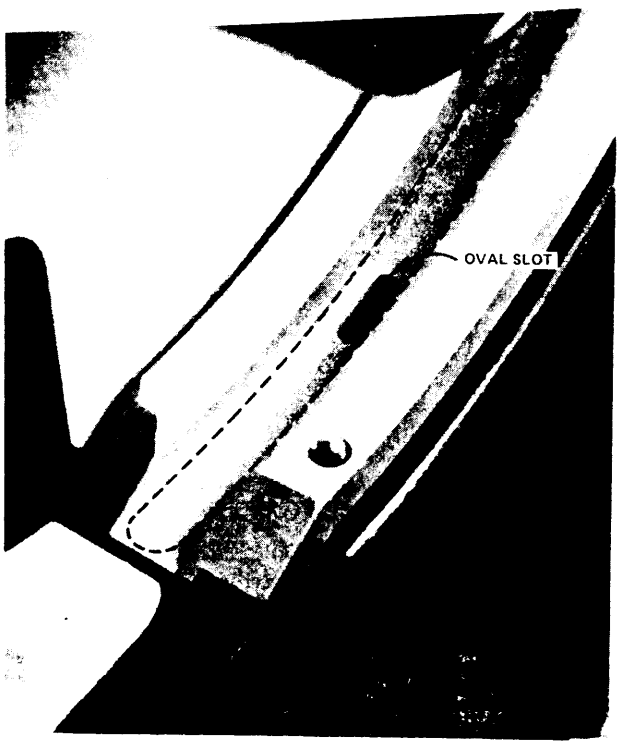

Figure C-47

TAPE PREPOSITIONING

OPERATION AND MAINTENANCE (Cont'd.)

Alert Condition	Recovery Procedure
Tape motion failure	Check that main circuit breaker is set to ON. Check front door; it must be completely closed. Try to cycle unit up again. If failure recurs, notify the Field Engineer.
Unit will not set ready	Notify Field Engineer.
Excessive data error rate	Clean unit in accordance with maintenance procedures. If failures continue, notify Field Engineer.
Amber light at cabinet circuit breaker not lit (See Fig. 3-3)	Notify Field Engineer.
Unit fails to cycle up	Notify Field Engineer.
File reel hub fails to open	Set SEMI/AUTO switch to SEMI, press START button (the LOAD/REWIND button on the MTU 0400/0500) and then the STOP button (UNLOAD button on MTU0400/0500). If hub continues to fail to open, notify Field Engineer.

Failure of Automatic Tape Threading

Should the tape fail to thread automatically onto the take-up reel, the tape unit rewinds the tape back onto the supply reel and automatically tries threading again. Three attempts are made. At the end of the third try, the unit rewinds the tape onto the supply reel and lowers the window. (The MTU0600 does not retry 3 times unless it is a cartridge load.)

Failure of automatic tape threading may be due to any one of the following:

- A static condition
- A missing or defective BOT patch
- A defective tape leader
- A tape that has been subjected to abusive treatment in handling and storage
- The use of an old and abused cartridge or reel

To ensure the automatic threading of tape, always check and closely observe the physical condition of reel, cartridge, and tape prior to mounting. If the tape unit fails to thread tape automatically, the operator may be compelled to thread tape manually.

OPERATION AND MAINTENANCE (Cont'd.)

Static Conditions

Static conditions can cause the leader to cling to the reel of tape and not separate during the reverse tape motion performed by the MTU0400/0500 at the start of the tape loading operations.

NOTE: An important environment in the tape storage and/or the computer room will contribute to static conditions.

To assure successful tape loading under these conditions, two operator techniques may be used:

1. Press the UNLOAD button to lower the window.
2. Place the supply reel or cartridge on the reel mounting hub.
3. Preposition the leader into the ramp so that the leader is at the extreme left end of the ramp covering the oval slot on the MTU0400/0500 (see Figure C-47).
4. Set SEMI/AUTO switch to AUTO.
5. Remove hands from the tape compartment.
6. Press the START button (the LOAD/REWIND button on the MTU0400/0500).

   - The tape should automatically load.
     OR ELSE
     Follow the manual tape threading procedures.

Defective Tape Leader

Damaged tape leaders are usually the cause of tape not threading automatically. The tape can be threaded manually, but not automatically until the leader has been repaired.

1. Remove the damaged part of the leader (fold/creases) by cutting squarely with a Honeywell Tape End Cutter (Part No. C60202399-001) or equivalent.

2. Crimp the tape with a crimping tool or a Honeywell Tape End Cutter, which also performs this function (see Figure C-48).

   - The tape crimp or dimple prevents the tape from adhering to itself and the trim renders optimum performance during automatic tape threading.

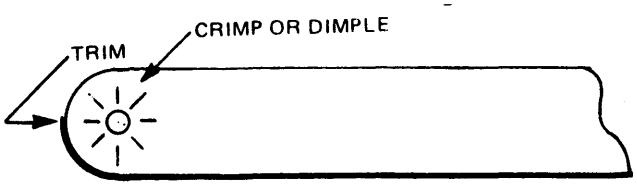

FIGURE C-48

END-OF-TAPE TRIMMING AND CRIMPING

NOTE: If a tape unit persists in rejecting the automatic load, even after the leaders have been trimmed, call your Honeywell Field Engineer.

Defective BOT Patch

A missing or defective beginning-of-tape (BOT) patch causes the failure to complete the load operation. Sensing this, the tape unit cycles down. Upon observing this, the operator should do the following:

1. Press the UNLOAD button to lower the window.
2. Manually rewind all the tape back onto the supply reel.
3. Set the SEMI/AUTO switch to SEMI.
4. Press the LOAD/REWIND button (on the MTU0400/0500) or the UNLOAD button (on the MTU0600).
5. Gently remove the cartridge or supply reel to inspect the condition and location of the patch.
6. Replace the BOT patch if necessary, and remount the reel.
7. Set the SEMI/AUTO switch to AUTO.
8. Resume normal operations (refer to "Tape Loading And Automatic Tape Threading") to load tape.

BOT Patch Mounting

The beginning and end of the working storage area on the tape is marked by a small inch-long reflective marker. Marker dimensions are:

Length:	1.1 inch plus/minus 0.2 inch
Width:	0.19 inch plus/minus 0.02 inch
Thickness:	0.0008 inch maximum

The BOT and the EOT markers are placed on the Mylar base side of the tape. Care must be exercised in placing the markers. They must be within 0.03 inch of but not protrude beyond the reference edge of the tape, and free of wrinkles and excessive adhesive.

The tape between BOT and the physical beginning of tape is referred to as the leader. If bad spots develop on the tape toward the leading edge, the BOT marker can be moved down so that the damaged section of the tape is on the leader. The remainder of the tape can still be used for information storage in the normal manner. A leader length of 10 to 25 feet is recommended for automatic loading.

OPERATION AND MAINTENANCE (Cont'd.)

Tape Handling and Storage

The following rules are prerequisite for proper magnetic tape handling and storage.

1. KEEP TAPES CLEAN. Dust and dirt can reduce the intensity of reading or recording signals by altering the distance between the head and the tape. Therefore:

   - Never touch the tape's oxide coating; body oils on tape attract dust and lint.
   - Keep the tape in its dust-proof container until just prior to use on the tape drive.
   - Keep tape containser clean and dust-free inside and out. Don't leave containers open when tape is in use.
   - Keep the tape transport window closed when the tape drive is not in use.
   - Avoid dangling the free end of the tape on the floor when changing reels.
   - Don't smoke in the computer room. Smoke and ashes are dirt; hot ashes are destructive to magnetic tape. Food and drink should be prohibited.
   - Identify reels with adhesive stickers, which are easily removed and leave no residue. Eraser particles are dirt. Change the label, don't erase it.

2. HANDLE AND STORE TAPES WITH CARE. Avoid damaging tapes and reels or placing tapes where temperature, dust, or magnetic fields affect them adversely.

   - When rewinding tape, be sure wind tension is proper (approximately 6 to 8 ounces (168 to 224 grams) for one-half inch (1.27 cm) wide tapes). Loose or tightly wound tape causes wrinkles and creases to appear on the tape, which in time disrupt contact between tape and tape drive head.
   - Make sure that the tape leader is properly wound when tape is returned to its container. This avoids accidental crushing of tape leader edges and possible damage to the tape itself.

OPERATION AND MAINTENANCE (Cont'd.)

Tape Handling and Storage (Cont'd)

- Avoid dropping reels. If a tape is dropped, the reel may become broken or dirty, resulting in possible damage to the tape. Reel damage can be determined by a visual inspection. Never use a reel that may cause damage to the tape or to the tape drive.

- Always store tapes in containers in a dust-free cabinet. The containers should be placed on edge so that the reel is in an upright position. Stacking tape reels one on top of the other is not recommended since there is a possibility of damaging the bottom containers from the excessive weight of the stacked reels.

- Never place reels of tape on top of a tape drive as this exposes them to head and dust from the cooling system.

- Never store reels of tape in an area where strong magnetic fields are present or where they may come in contact with magnetic materials.

- Whenever possible, store tapes in the controlled environment where they are to be used to avoid subjecting the tapes to excessive handling and vairations in temperature and humidity. For short-term tape storage, the surrounding atmosphere should be controlled with the following limits:

  Relative humidity: operational 40% to 60%
  Temperature: operational 60 to 80 degrees F (16 to 27 degrees C).

- For long-term storage, the reel of tape in its container should be hermetically sealed in a moisture-proof bag. Temperature should be constant somewhere between 60 and 80 degrees F (16 to 27 degrees C). Freezing or excessively high temperatures and magnetic fields and material are to be avoided.

- When mounting or demounting tapes, handle the tape reels by the hub and not by the flanges. Squeezed or bent flanges result in damaged tape edges and eventual loss of contact with the magnetic head.

- In manual loading, when mounting a reel onto the tape drive, apply pressure to the hub and not to the flanges.

OPERATING INSTRUCTIONS

SUBSYSTEM CONSIDERATIONS

This subsystem affords a high degree of subsystem effectiveness and data availability to the user. Data availability depends upon the ability to remove a disk pack from a failed disk pack drive and install it in an operating one. Reserve a disk pack drive as a spare so that disk pack drives can be tested and repaired while the rest of the subsystem is online.

NOTE: The DSS190 and DSS190B have been designed to operate with the M4050 Disk Pack. Equivalent disk packs conforming to the specifications of the M4050 Disk Pack may be used.

Data availability also requires the proper care, handling, and storage of the disk packs.

Disk pack identification and status labels should be affixed to the carrying case, never to the disk pack itself. Take care not to interchange disk packs and carrying cases to keep the information on the label (or listing) with the correct disk pack.

Bad or marginal track locations as found in manufacturing tests are noted on the disk pack carrying case labels or listings. Marginal tracks will degrade in a few months and should be treated as bad tracks. If more bad or marginal tracks develop, preserve this information in a file. Identify the disk pack by its serial number and list its bad or marginal tracks.

NOTE: Early versions of the disk pack may not have defective track information on the label or associated listings. In any case, defective track information is recorded on the disk pack and will be used by the startup and format programs. These tracks will be deallocated.

Occasionally, dust particles settle on a disk pack recording surface and get between the head and recording surface. The recording surface will be scratched by these particles and the disk pack surface slowly will deteriorate. An increasing number of read errors that can be recovered by the automatic retry program or the user retry option are evidence of deterioration. Establish a log of recoverable errors to evaluate trends of deteriorating performance.

Before recoverable errors become nonrecoverable, you should declare the suspect track defective and relocate its data to an alternate track. If more than a single error occurs on a track within one week, copy the entire disk pack onto another preformatted disk pack, or declare the track defective and redistribute the data on the disk pack.

OPERATING INSTRUCTIONS (Cont'd.)

When a nonrecoverable read error occurs, do not relocate the data to an alternate track, or declare the track defective. Instead, restore the data to the user file affected. An alternative is to move the disk pack to another disk pack drive and retry the operation. If this procedure fails, reconstruct either the disk pack or the user file.

It is also possible to get errors during a write operation. In these cases, alternate tracks should be assigned.

In disk storage unit operations, momentary contact of heads and recording surfaces is normal. Therefore, surface markings on the recording surfaces can be ignored unless they are accompanied by operational problems.

SUBSYSTEM CONTROLS AND INDICATORS

Controls and indicators for the subsystem consist of operating, configuration, and maintenance switches and operational status display lamps. Operating controls and indicators are used during the normal operations of the subsystem and are easily accessible and visible to operations personnel. Operating controls and indicators are located on the DSC operator panel and the DSU operator panel. Configuration switches are set only during the initial installation or reconfiguration of the subsystem. To prevent changing these switches during normal subsystem operation, they are not easily accessible. The maintenance switches and indicators are for the exclusive use of the service engineer for offline maintenance. They, also, are not easily accessible. Only normal operating controls and indicators are described in this manual.

DSC OPERATING CONTROLS AND INDICATORS

The DSC operator control panal contains the switches and indicators required for normal operation of the DSC (see Figure C-49). The color coded indicators display the operating status of the DSC.

OPERATING INSTRUCTIONS (Cont'd.)

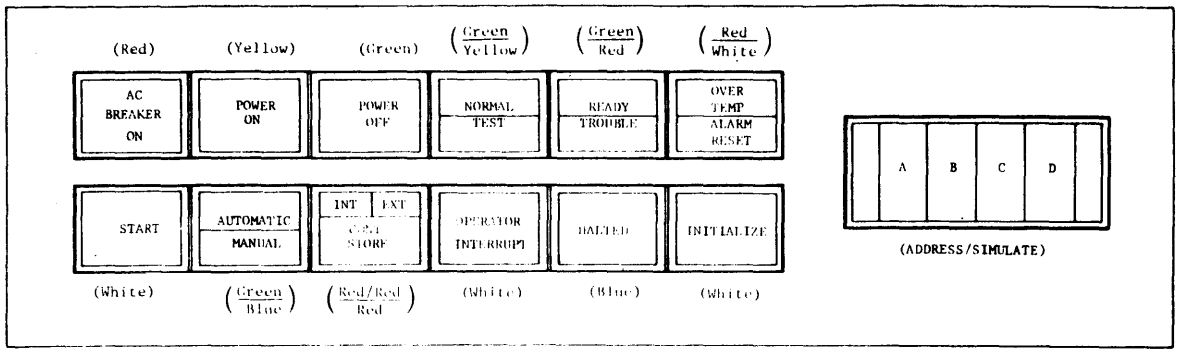

Figure C-49

OPERATING INSTRUCTIONS (Cont'd.)

AC BREAKER ON

This indicator lights red when the DSC cabinet primary branch service power circuit breaker is on and power is being applied to the DSC from the EUS power source panel.

NOTE: The DSC cabinet circuit breaker is located behind the right front door at the bottom right side of the cabinet on the circuit panel. This circuit breaker applies primary service power to the DSC and protects the DSC from overloading.

POWER ON

Pressing this switch when ac power is on (AC BREAKER ON indicator lighted) turns the DSC cabinet dc power on. The POWER ON indicator lights yellow and the POWER OFF indicator goes out.

POWER OFF

Pressing the switch when dc power is on turns the dc power off. The POWER OFF indicator lights green and the POWER ON indicator goes out.

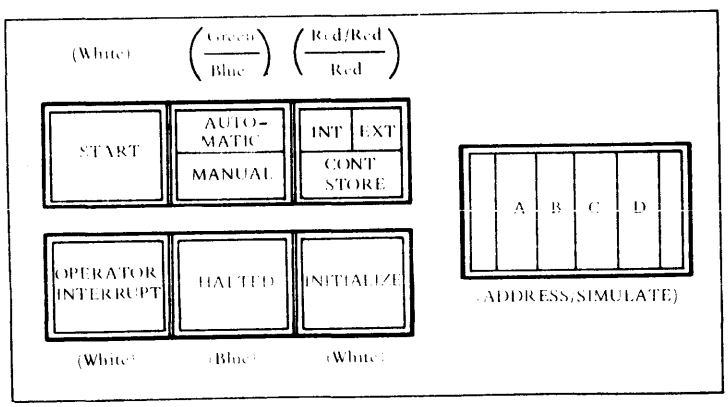

Figure C-50

OPERATING INSTRUCTIONS (Cont'd.)

NORMAL/TEST

This split-field indicator defines the state (green = NORMAL, yellow = TEST) of the MAINT PANEL MODE NORMAL/TEST switch located on the TEST area of the maintenance panel. The switch must be in the NORMAL position for DSC operation.

NOTE: The maintenance panel is concealed behind the cover surrounding the operator panel. If the switch is in the TEST position, the operator may open the cover and reset the switch to NORMAL.

READY/TROUBLE

This split-field indicator shows the operational state (green = READY, red = TROUBLE) of the DSC.

NOTE: The TROUBLE state occurs when the HALTED indicator is on or when the OPERATION MODE OFFLINE/ONLINE switch (located on the TEST area of the maintenance panel) is set to OFFLINE. If the HALTED indicator is on, the operator may attempt to set the DSC to the READY state by using the START switch. If the DSC does not leave the halt state, the operator may open the maintenance panel cover and reset the OPERATIONAL MODE OFFLINE/ONLINE switch to ONLINE if needed. If the trouble persists, notify the local Honeywell field service engineer.

OVER TEMP/ALARM RESET

This split-field indicator lights red in the OVER TEMP field and white in the ALARM RESET field. The DSC audible alarm sounds if the DSC cabinet is too hot. Pressing the switch turns off both the audible alarm and the white ALARM RESET field. The operator should press the POWER OFF switch and wait for the cabinet to cool. If the OVER TEMP fiels stays lighted, notify the local Honeywell field service engineer.

START

Pressing this switch when the DSC is in the HALTED state changes the DSC from the TROUBLE to the READY state (see READY/TROUBLE indicator) and the indicator lights white.

OPERATING INSTRUCTIONS (Cont'd.)

AUTOMATIC/MANUAL

This split-field shows the operational mode (green = AUTOMATIC, blue = MANUAL) of the DSC. This switch allows operator control over the execution of the initialize and halt options of the microprogram. These options are logically inhibited in the AUTOMATIC mode. Pressing this switch changes the state of the switch to the alternate state.

INT/EXT/CONT STORE

This three-way split-field indicator lights red in an individual field when an error is detected. Pressing this switch or executing the error option of the microprogram should reset the error and turn off the indicator field. If the error persists, notify the Honeywell field service engineer.

OPERATOR INTERRUPT

Pressing this switch lights the indicator white and causes the information stored in the ADDRESS/SIMULATE switches to be sent to the EUS as status for a special interrupt. The operator interrupt state is reset by the microprogram and the indicator goes out automatically.

HALTED

This indicator lights blue when the DSC goes into the halt state.

INITIALIZE

Pressing this switch lights the HALTED indicator and resets the DSC to the initialized state. The indicator lights white.

ADDRESS/SIMULATE

These four thumbwheel switches are used in conjunction with the OPERATOR INTERRUPT switch to permit the user to address various functions of the DSC. The desired setting depends upon the specific application required. In conjunction with the maintenance panel these switches are used for diagnosing the DSC. Care should be taken not to change these switches while they are being sensed by the microprogram, since an error could result.

OPERATING INSTRUCTIONS (Cont'd.)

Control Configuration Switches

These switches consist of 16 MICROPROGRAM READABLE switches, Ø–15 (see Figure C–51). The switches for the free-standing model are located behind the swing-down panel of the operator panel; those of the model integrated in the ICU are located on the maintenance panel behind the ICU right front narrow door. The switches are set by the Honeywell field engineer for proper operation of the subsystem and should not be disturbed by the operator. The only switches the operator may need to use in case of subsystem reconfiguration are switches 2, 8, 9 and 1Ø (see Table C–9).

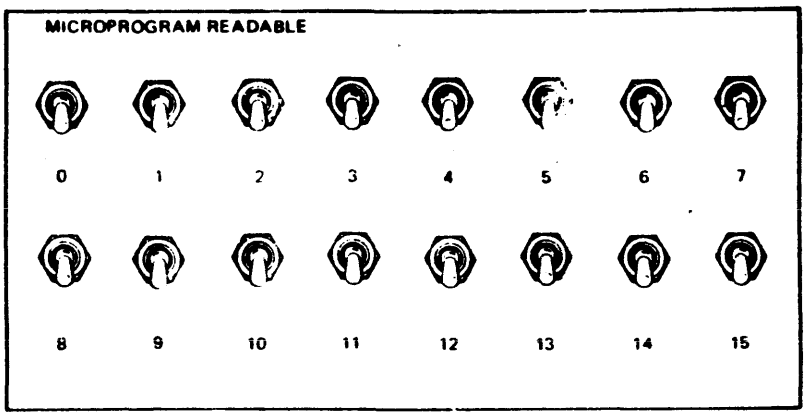

Figure C-51

OPERATING INSTRUCTIONS (Cont'd.)

DSU190 Operating Controls and Indicators

The DSU190 operator panel contains the switches and indicators required for normal operation of the DSU (see Figure C-52). The color coded indicators display the operating status of the DSU190. Table C-10 presents the functions of the operator panel switches and indicators.

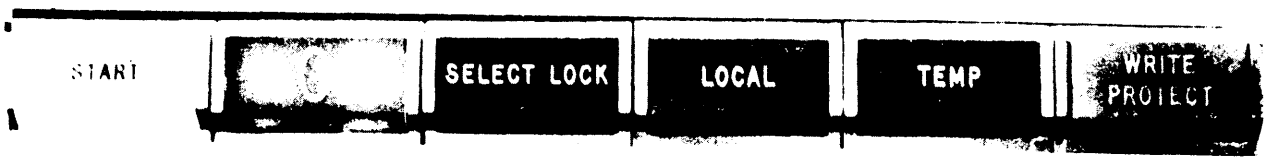

Figure C-52

DSU190B Operating Controls and Indicators

The DSU190B operator panel, containing the required switches and indicators for normal operation, is shown in Figure C-53. Table C-11 presents the functions of the operator panel switches and indicators.

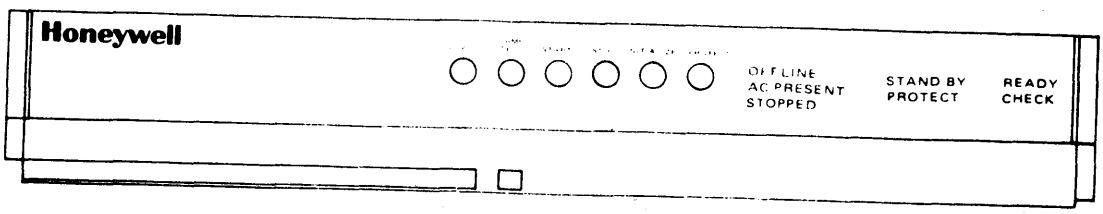

Figure C-53

OPERATING INSTRUCTIONS (Cont'd.)

Table C-10. DSU190 Controls and Indicators

CONTROL OR INDICATOR	FUNCTION
START switch/indicator	Energizes spindle drive motor and begins the First Seek sequence provided the following conditions are met: 1. Disk pack is in place and cannister removed. 2. Front and top covers are closed. 3. Circuit breakers are on. 4. START switch is pressed. Any of the following conditions will extinguish the indicator and start a power off sequence: 1. START switch pressed 2. SSS command from controller 3. Any cover interlock opens 4. Any dc circuit breaker trips 5. Loss ov -16V emergency retract power
UNIT Number Indicator	Lights when the heads are loaded, indicating which unit is online. Unit members are installed by installation personnel and should not be changed.
SELECT LOCK switch/ indicator	Lights when one or more of the following fault conditions occur: 1. Read or Write is selected without an On Cylinder signal 2. Low voltage (plus/minus 5V, 20V, or -16V) signal 3. Read and Write are selected at the same time

Table C-10 (Cont'd). DSU190 Controls and Indicators

CONTROL OR INDICATOR	FUNCTION
SELECT LOCK switch/ indicator (contd).	4. Servo digits lost for more than 200 milliseconds (heads automatically unload) 5. More than one head is selected 6. Head Register contains number exceeding 18 (No Head Select) 7. Write command without write current 8. Write current without Write command 9. Write current without write data Conditions 5 through 9 are known as current faults. They are inhibited while writing address marks. All conditions require that the SELECT LOCK switch be pressed or that the controller issue a DIN.
LOCAL indicator	Lights when drive experiences either of the following conditions: 1. Controller issues an SLS command. 2. ONLINE switch on logic chassis maintenance panel set to either OFFLINE position.
TEMP indicator	Lights when air flow is restricted enough to cause potential overheating. If air flow is less than about 150 fpm past either switch, indicator will light. One switch is located next to the intake of the logic fan that cools +5V regulator. The second switch is located at the intake of the power supply fan that cools the power amplifier board.

OPERATING INSTRUCTIONS (Cont'd.)

Table 3-2 (Cont'd). DSU19Ø Controls and Indicators

CONTROL OR INDICATOR	FUNCTION
WRITE PROTECT switch/ indicator	Inhibits all write operations. Any subsequent WRT or WRT TEST command will set State Violation (DSB1, Bit 2^{3}).

Table C-11. DSU19Ø Controls and Indicators

CONTROL OR INDICATOR	FUNCTION
START switch	Starts spindle rotation and causes device to go from standby to ready state. Switch will not work when cover is open.
STOP switch	Stops spindle rotation and changes device from ready to standby state.
INITIALIZE switch	Puts device in available substate. Resets all operational and status registers. Switch does not work when device is in ready state or after a positioner emergency retract.
PROTECT switch	Inhibits or enables write operation.
LAMP TEST switch	Lights all indicator lamps. Works in standby state only.
LOAD switch	Momentarily depressing switch open or closes cover. Switch will not work while the spindle is rotating.
READY indicator	Indicates that the device is in the ready state.
STANDBY indicator	Indicates that the device is in the standby state. Indicator lights when STOP switch has been pressed.
STOPPED indicator	Lights when disk pack rotation has stopped, indicating that cover door may be opened.

OPERATING INSTRUCTIONS (Cont'd.)

Table C-11 (Cont'd). DSU190 Controls and Indicators

CONTROL OR INDICATOR	FUNCTION
OFFLINE indicator	Indicates that the device is powered up, but in the offline state.
PROTECT indicator	Indicates that the write operation has been inhibited by pressing the PROTECT switch of by detecting a fault condition.
AC PRESENT indicator	Indicates the presence of primary power.
POWER ON/OFF indicator	Controls the device primary power, but not the convenience outlet. Located behind the front door of the device.

SUBSYSTEM OPERATION

The subsystem operates in the EUS environment with the System Console, the Card Reader and Printer Subsystems, the Input/Output Multiplexer, and/or the DATANET 355 Front-End Network Processor. For operation of the subsystem in conjunction with the EUS, refer to the document list located in the preface.

Since operation of the subsystem is under control of the EUS program, the main concern of the subsystem operator is to provide a high degree of data availability to the EUS by:

- Keeping the subsystem ready and running
- Assuring that the proper disk packs are correctly installed
- Exchanging disk packs when required or when a disk pack drive fails
- Releasing a device to exchange disk packs if a spare is not available when the failure or the exchange is requested
- Monitoring for and resolving temporary alert conditions
- Notifying the local Honeywell field service engineer when alerts or malfunctions cannot be resolved readily

- Starting and stopping the DSC and devices when required
- Keeping the equipment and area clean
- Handling and maintaining the disk packs properly
- Performing emergency procedures if required

DSC Operation

DSC operation consists of turning cabinet power on and off when required; monitoring the various indicators for operational status, correcting any temporary error or malfunction halts, and initializing and starting the DSC. For more information refer to DSC Operating Controls and Indicators.

DSU Operation

DSU operation consists of turning cabinet power on and off when required; monitoring the various indicators for operational status; correcting temporary alert conditions; restricting a DSU to read-only operations when required; stopping and starting the disk drive and installing or changing disk packs when requested or needed (refer to DSU Operating Controls and Indicators).

DSU190 INITIALIZATION

Perform the following procedure to initialize a DSU190 (only).

1. Locate the ONLINE rotary switch. It is the third switch from the left on the maintenance panel inside the logic chassis door.
2. Set the ONLINE rotary switch to the OFFLINE position; then turn back to the ONLINE position.

   NOTE: Switching from OFFLINE to ONLINE positions causes general reset.

DSU190 DISK PACK INSTALLATION

Make certain that the disk pack to be installed has been cleaned and maintained properly.

1. Raise drive front cover.

   NOTE: A spindle lock mechanism (ratchet brake) actuated when the front cover is opened holds the spindle stationary while a disk pack is loaded.

2. Lift the disk pack by the plastic canister handle.

3. Disengage the bottom dust cover from the disk pack using the latch in the center of the cover. Set the cover aside to a dust-free storage area.

   CAUTION: Avoid abusive contact between the disk pack and the spindle. During maintenance procedures the read/write heads sometimes are positioned manually. Make certain that the heads are fully retracted.

4. Place the disk pack onto the spindle.

5. Twist the cannister handle clockwise until the slip clutch resists further twisting. The pack is now locked in place.

6. Lift the cannister clear of the disk pack and set it on the bottom dust cover.

7. Close the front cover immediately to prevent dust from getting in and contaminating the disk surfact.

DSU190 DISK PACK REMOVAL

1. Extinguish the operator panel START switch by pressing it.

2. Wait until disk pack has completely stopped rotating.

   CAUTION: A spindle lock mechanism engages when the front cover is opened. When a spinning drive is opened there is a loud ratcheting noise. This will not damage the unit, but it is not recommended.

3. Raise the front cover.

   CAUTION: During maintenance procedures the read/write heads sometimes are positioned manually. Make certain that the heads are fully retracted.

4. Place the plastic canister over the mounted disk pack so that the post protruding from the center of the disk pack is received into the canister handle.

   CAUTION: Avoid abusive contact between the disk pack and the spindle assembly.

5. Twist the canister handle counterclockwise until the disk pack is free of the spindle.

6. Lift the canister and the disk pack clear of the spindle.

7. Close the front cover.

8. Place the bottom dust cover in position on the disk pack and latch.

9. Store the disk pack flat, resting on its bottom cover, in a clean cabinet or on a clean shelf.

DSU190B INITIALIZATION

To initialize a DSU190B press the INITIALIZE switch to reset all operational and status registers. The INITIALIZE switch will not work when the DSU is in a ready state or after a positioner emergency retract.

DSU190B DISK PACK INSTALLATION

Make certain that the disk pack to be installed has been cleaned and maintained properly.

1. Verify that the STOPPED indicator is lighted.

   CAUTION: No attempt should be made to open the cover manually at any time. The cover is disabled and the LOAD switch will not work while the pack is rotating. The LOAD switch becomes effective only after the STOPPED indicator lights. See Table 3-3.

2. Press the LOAD switch to open the cover.

   NOTE: The DSU190B disk drive was designed for pack loading directly into the front of the unit. Do not attempt to position the pack on the spindle by lowering the pack from the top of the unit.

3. Lift the disk pack by the plastic canister handle.

4. Disengage the bottom dust cover from the disk pack using the knob in the center of the cover. Set the cover aside to a dust-free storage area.

   CAUTION: Avoid abusive contact between the disk pack and the spindle. During maintenance procedures the read/write heads sometimes are positioned manually. Make certain that the heads are fully retracted.

OPERATING INSTRUCTIONS (Cont'd.)

5. Place the disk pack onto the spindle.

6. Twist the canister handle clockwise until the slip clutch resists further twisting. The pack is now locked in place.

7. Lift the canister clear of the disk pack and set it on the bottom of the dust cover.

8. Close the front cover immediately to prevent dust from getting in and contaminating the disk surfaces.

DSU190B DISK PACK REMOVAL

1. Press the STOP switch to stop spindle and pack rotation. Wait for the STOPPED indicator light.

2. After the STOPPED indicator lights, press the LOAD switch to open the cover.

   CAUTION: During maintenance procedures the read/write heads sometimes are positioned manually. Make certain that the heads are fully retracted.

3. Place the plastic canister over the mounted disk pack so that the post protruding from the center of the disk pack is received into the canister handle.

   CAUTION: Avoid abusive contact between the disk pack and the spindle assembly.

4. Twist the canister handle counterclockwise until the disk pack is free of the spindle.

5. Lift the canister and the disk pack clear of the spindle.

6. Press the LOAD switch to close the front cover.

7. Place the bottom dust cover in position on the disk pack and tighten it.

8. Store the disk pack in a clean cabinet or on a clean shelf.

OPERATING INSTRUCTIONS (Cont'd.)

Emergency Operation

Operations personnel should be thoroughly familiar with procedures for protecting people and equipment if an emergency occurs. The general emergency procedure is to turn off power at the affected unit. Power may be turned off at the affected unit, at the operator panel, at the circuit breaker on the rear of the unit, or at the building circuit breaker, depending on the severity of the emergency. Emergencies that can arise are mechanical, electrical, or overheating malfunction of a unit; outside primary power fialure; air conditioning failure; fire; flooding. In case of other unexpected conditions, take action appropriate for the type of emergency.

SUBSYSTEM MAINTENANCE

The Honeywell field service engineer will perform all the maintenance required by the subsystem except for the routine cleaning of the DSC, DSU, and disk packs. This should be done by operations personnel.

DSC/DSU Maintenance

Operations personnel should keep the DSC and DSU cabinets clean and free of dust. The DSU disk pack chamber and spindle may be cleaned with a lint-free tissue lightly dampened with approved cleaning alcohol.

Disk Pack Maintenance

Proper handling, storing, and cleaning of disk packs is important to give users a high degree of data availability.

MSU0400 MASS STORAGE

The MSU0400 Mass Storage Units are high-capacity disk storage subsystems with advanced microprogrammed control and operating features that improve response time and throughput. These disk units connect to Series 60 Level 64, 66, and 68 systems as specified in Table C-12.

The disk units are controlled by physically integrated or freestanding mass storage processors.

TABLE C-12. CONFIGURABILITY

	Level 64		Level	Level
	64/20	64/40	66	68
Units	1-4	1-8	1-32	1-32

DATA INTEGRITY AND PROTECTION

The integrity and protection of data is ensured by the following features:

- Write protect capability - Individual write-protect pushbutton for each disk unit excludes the possibility of recording on protected files.
- Automatic unloading - Heads automatically unload when specific conditions, such as low rotational speed or loss of power, are detected.
- Operator inhibition - The operator cannot open the cover to remove the disk pack until the spindle has come to a complete stop.
- Power fault sensing - If an ac or dc power fault has occurred, recording cannot take place.
- Write current monitoring - write current is inhibited during seeks or without command and loss is detected during a write command.
- Check code insertion - The validity of recorded information is ensured by the insertion of characters of check information ("check code") in each record.
- Automatic disk cleaners - Built-in cleaning brushes remove foreign particles before the read/write heads are loaded.

MSU0400 MASS STORAGE (Cont'd.)

- Parity checking - The device monitors command and data lines for odd parity; if even parity is detected, a fault is set.
- Temperature sensing - Overtemperature conditions are displayed and an audible alarm sounded.
- Head offset - Heads may be offset by command to facilitate data recovery.
- No/multihead select - The device checks for no/multi heads being selected, which will inhibit the write function.

IMPROVED SYSTEM AVAILABILITY

An enhanced diagnostic ability reduces both system time required for online repair and the total offline repair time spent on the unit itself. Online error and status reporting to the central processor system allows software-controlled diagnosis of the electronics.

OPTIONS

MSF0004, rotational position sensing, is required for operating the disk unit on Level 66 and 68 systems. Dual access capability, MSF0002, is optionally available.

CHARACTERISTICS

Table C-13 lists the operational characteristics of the MSU0400.

The Honeywell M4050A disk pack (or equivalent) can be removed from the unit, stored, and inserted as the need arises. For supplies and accessories order information, refer to the Honeywell Computer Supplies Catalog. Order No. BY62, or consult your Honeywell Marketing Representative.

The dimensions of the unit are:

- Height - 41.75 in.(106 cm)
- Width - 35 in.(88.9 cm)
- Depth - 30 in.(76.2 cm)
- Weight - 850 lb(385.9 kg)

MSU0400 MASS STORAGE (Cont'd.)

TABLE C-13. MASS STORAGE UNIT CHARACTERISTICS

Characteristic	Description
Data capacity	
Formatted (millions characters/ millions 9-bit bytes)	117/78
Unformatted (millions characters/ millions 9-bit bytes)	133/88
Transfer rate (thousands characters per sec/thousands bytes per sec)	1,075/806
Average access time (milli-seconds)	33.3
Minimum seek time	5
Average seek time	25
Maximum seek time	45
Average latency	8.3
Simultaniety	During data transfer on one unit, a simultaneous seek operation can be performed on all other units on the same Mass Storage Processor
Disks per pack	12
Recording surfaces per pack	19
Tracks per recording surface (spares included)	411
Spindle speed (rpm)	7
Disk pack used (or equivalent)	3600
	M4050A

CONTROLS AND INDICATORS

Primary power is controlled by the main power circuit breaker located by raising the cover above the control panel. The controls and indicators on the control panel for the MSU0400 are shown in Figure C-54. Indicators are visible only when illuminated.

A description of the functions of each indicator and control follows:

LOAD (Pushbutton)	Unlocks or locks the cover. (It will not operate when the spindle is rotating.)
LAMP TEST (Pushbotton)	Lights all operator-visible bulbs to check for defective bulbs. (It works only in the standby state.) Notify your local Honeywell Field Engineer in case of lamp failure.
START (Pushbutton)	Starts spindle rotation; causes the unot to go from standby to the ready state; lights up READY indicator. (It will not operate when the cover is unlocked.) Pressing the START button when the cover is open and the pack inserted causes the cover to close and the spindle to rotate.
STOP (Pushbutton)	Stops spindle rotation and causes the unit to go from the ready state to standby. STOPPED and STANDBY light up.
INITIALIZE (Pushbutton)	Places the unit in an available state and resets all operation and status registers. (It will not work when the unit is in the ready state.)
PROTECT (Pushbutton)	Inhibits or enables write operations on the disk pack. If pressed when the PROTECT indicator is lighted, it turns the light off and enables write operations. If pressed when the PROTECT indicator is off, PROTECT lights up and inhibits write operations.
OFFLINE (Indicator)	Lights when the unit is powered up and in the offline state.
AC PRESENT (Indicator)	Lights when the unit is powered up via the main power circuit breaker.

CONTROLS AND INDICATORS (Cont'd.)

STOPPED (Indicator)	Lights when the spindle has come to a complete stop and the cover is unlocked.
STANDBY (Indicator)	Lights when the unit is in the standby state and when the STOP button has been pressed.
PROTECT (Indicator)	Lights when the write operations have been inhibited by the PROTECT button or by the detection of a fault condition. If indicator is off, write operations may be performed.
READY (Indicator)	Lights when the spindle is rotating at its proper speed, the heads are loaded, and the unit is ready to accept commands.
CHECK (Indicator)	Lights when a fault condition occurs. After correcting the condition, reset the indicator by pressing INITIALIZE.

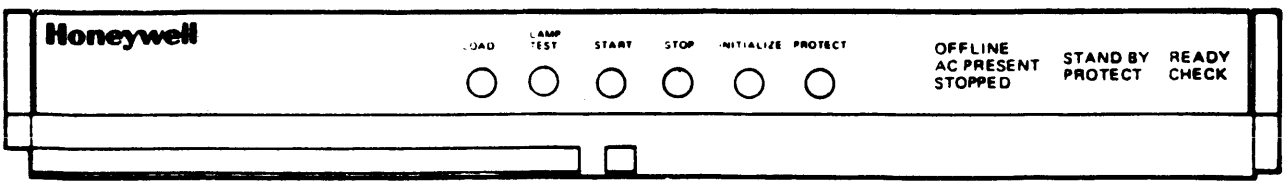

FIGURE C-54

OPERATING PROCEDURES

POWER-UP SEQUENCE

In the following procedure, it is assumed that all cables have been properly connected and secured and that power is supplied to the unit.

1. Raise cover above control panel.
2. Set circuit breaker to the ON position. AC PRESENT lights up.
3. Press INITIALIZE button to turn on dc voltages.
4. Close top cover. A disk pack may now be loaded.

POWER-DOWN SEQUENCE

1. Press the STOP button to bring the unit to the standby state. STOPPED and STANDBY light up.
2. Open cover and remove disk pack.
3. Close cover.
4. Raise cover above control panel.
5. Set circuit breaker to the OFF position.
6. Close top cover.

INITIALIZATION

To initialize a unit, press the INITIALIZE button on the control panel. This resets all operational and status registers.

DISK PACK LOADING

Make certain that the disk pack to be installed has been cleaned and maintained properly.

1. Verify that the STOPPED indicator is lighted.

CAUTION: No attempt should be made to open the cover manually at any time. The cover is disabled and the LOAD button will not operate while the pack is rotating. The LOAD button becomes effective only after the STOPPED indicator lights up.

2. Press the LOAD button to unlock the cover.

NOTE: This device was designed for pack loading directly into the front of the unit. Do not attempt to position the pack on the spindle by lowering the pack from the top of the unit.

OPERATING PROCEDURES (Cont'd.)

DISK PACK LOADING (Cont'd.)

3. Lift the disk pack by the plastic canister handle.

4. Disengage the bottom dust cover from the disk pack using the knob in the center of the cover. Set the cover aside to a dust-free storage area.

CAUTION: Avoid bumping the disk pack against the spindle and make certain that the heads are fully retracted.

5. Place the disk pack onto the spindle.

6. Twist the canister handle clockwise until the slip clutch resists further twisting. The pack is locked in place.

7. Lift the canister clear of the disk pack and set it on the bottom of the dust cover.

8. Close the cover immediately to prevent dust from getting in and contaminating the disk surfaces. (Either LOAD or START will automatically close the pack compartment.

9. Select one of the following procedures as appropriate. To enable writing on the disk pack, do not press the PROTECT button (leave it unlighted). To inhibit writing on the disk pack, press the PROTECT button (PROTECT lights up).

10. Press the START button. READY lights up.

DISK PACK UNLOADING

1. Press the STOP button to stop spindle and pack rotation. Wait for the STOPPED indicator to light up.

2. Press the LOAD button to unlock the cover.

CAUTION: During maintenance procedures the read/write heads sometimes are positioned manually. Make certain that the heads are fully retracted.

3. Place the plastic canister over the mounted disk pack so that the post protruding from the center of the disk pack is received into the canister handle.

CAUTION: Avoid bumping the disk pack against the spindle assembly.

OPERATING PROCEDURES (Cont'd.)

DISK PACK UNLOADING (Cont'd.)

4. Twist the canister handle counterclockwise until the disk pack is free of the spindle.

5. Lift the canister and the disk pack clear of the spindle.

6. Press the LOAD button to close the front cover.

7. Place the bottom dust cover in position on the disk pack and tighten it.

8. Store the disk pack in a clean cabinet or on a clean shelf.

DISK PACK HANDLING AND STORAGE

The following common-sense rules are the prerequisites for proper disk pack handling:

- Always keep a disk pack in its carrying case, whenever it is not on a disk pack drive.

- The bottom cover of the disk pack carrying case may be removed easily by squeezing the latch on the bottom cover; the top cover is designed so that it cannot be removed until the disk pack is mounted on the spindle.

- Always reassemble the disk pack carrying case covers even when the disk pack is not inside.

- Never touch disk pack recording surfaces or the spindle mating surface with anything.

- Do not expose a disk pack to stray magnetic fields, excessive pressure, or sharp impact.

- Return every disk pack to its own carrying case.

- Never store a disk pack where the temperature exceeds the limit of 60 to 90 degrees F (15 to 32 degrees C). If the limit has been exceeded, keep the disk pack in the operating room temperature for two hours before it is used.

DISK PACK HANDLING AND STORAGE (Cont'd.)

- Store a disk pack in an environment identical to the disk pack drive operating environment.
- Never store a disk pack near strong magnetic fields or in direct sunlight.
- Store a disk pack flat, resting on its bottom cover. Never store a disk pack on edge.

GENERAL CLEANING

Operators should keep cabinets clean and free of dust. The disk pack chamber and spindle may be cleaned with a lint-free industrial cleaning tissue lightly dampened with an approved cleaning alcohol.

MSU0451 MASS STORAGE UNIT

Series 60
Level 66

The MSU0451 Mass Storage Unit translates advanced technology into key features for the current and future needs of the data processing user:

- o High capacity and throughput
- o Advanced data integrity
- o Improved system availability
- o Site efficiency
- o Operator convenience

HIGH CAPACITY AND THROUGHPUT

The unformatted storage capacity for each removable disk pack is 200 million bytes (266 million characters). However, the actual storage capacity is determined by system formatting.

More efficient utilization of the I/O channel is achieved through the use of a rotational position sensing feature (MSF0007), which reduces the effective latency of the device. Disk drive average seek time is 30 milliseconds. The MSU0451 features low cost per byte.

ADVANCED DATA INTEGRITY

The validity of recorded information is ensured by the insertion of characters of check information ("check code") in each record/sector. Data integrity is enhanced by offset track spacing under system control, which permits recovery of otherwise unrecoverable data.

A write protect capability - standard with this unit - allows the user to protect individual disk packs against inadvertent writing.

IMPROVED SYSTEM AVAILABILITY

Enhanced diagnostic ability reduces both system time required for online repair and the total offline repair time spent on the device itself. Online error and status reporting to the central processor system allows software-controlled diagnosis of the electronics. A built-in hardware diagnostic ability allows offline diagnosis and testing.

SITE EFFICIENCY

Care was taken in the design of the MSU0451 to reduce the floor space required for the subsystem. A typical 8-drive MSU0451 string occupies less than 160 square feet.

MSU0451 MASS STORAGE UNIT (Cont'd.)

OPERATOR CONVENIENCE

Pack loading is facilitated by the one-piece lid, which lifts out of the way to afford unimpeded access to the spindle area.

OPTION

A dual port capability (MSF0006) enables a drive to interface with one or two mass storage processors in a dual-port radial configuration. Dedication of the drive to one of the channels is via software.

MEDIA

A Honeywell Type M4451 disk pack (or equivalent) is used. It can be dismounted from a unit, stored, and then remounted as the need arises.

SPECIFICATIONS

DATA CAPACITY PER SPINDLE

Unformatted - 200 million bytes
Formatted - 235 million characters (157 million 9-bit bytes).

TRANSFER RATE: 806,000 bytes/second (1,075,000 character/second).

ACCESS TIMES/SIMULTANEOUSLY

Minimum seek time - 8 milliseconds
Average seek time - 30 milliseconds
Maximum seek time - 55 milliseconds
Average latency - 8.3 milliseconds
During data transfer on one drive, a simultaneous seek operation can be performed on all other devices on the same mass storage processor.

DISKS PER PACK: 12
RECORDING SURFACES PER PACK: 19
TRACKS PER RECORDING SURFACE (815 including 7 spares)
SPINDLE SPEED: 3600 rpm
PHYSICAL DIMENSIONS: 39 1/4-in. (99.7 cm) high: 22 in. (55.9 cm) wide: 44 1/2 in. (113 cm) deep.

PERIPHERALS

HONEYWELL LARGE SYSTEMS

MSU0501 MASS STORAGE UNIT

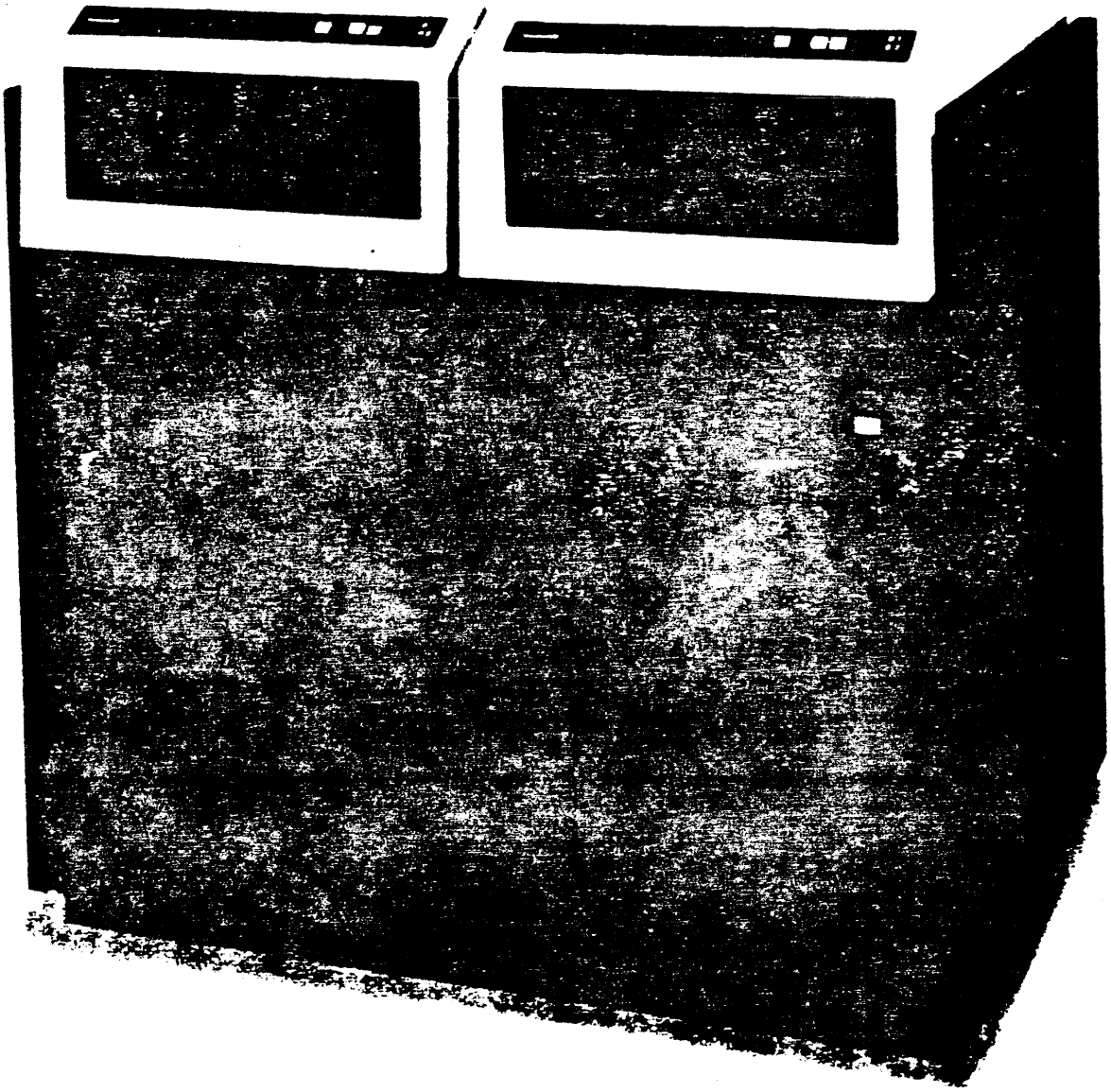

HONEYWELL LARGE SYSTEMS

MSU0501 MASS STORAGE UNIT

DESCRIPTION

The MSU0501 Mass Storage Unit is a dual-spindle, non-removable disk device with large storage capacity and advanced microprogrammed control and operating features, designed to help improve response time and throughput. The formatted storage capacity of the unit is 1101M bytes. The MSU0501 is controlled by an integrated or freestanding mass storage processor. From 1 to 15 disk units per mass storage processor can be connected to a DPS 8 system.

FEATURES

- Average seek time of 25 ms
- Transfer rate of 1,065,000 bytes per second
- Rotational position sensing to reduce effective latency time
- Check bits inserted into data records or sectors to help ensure the validity of data
- Write protect capability, allowing the user to protect the two individual disk modules against inadvertent writing.
- Enhanced hardware/software diagnostic ability to help reduce both system time for online repair and the total offline repair time spent on the device
- The capability to perform a seek operation during data transfer on one spindle, simultaneously on any other spindles attached to the same control

MARKETING IDENTIFIER

MSU0501 - Dual Fixed-Disk Mass Storage Unit (1101 bytes).

OPTIONS

MSF0011 Dual Port Capability enabling the MSU0501 to interface with two mass storage processors in a crossbarred configuration.

SPECIFICATIONS

Performance Characteristics

Data Capacity: 1651M characters: 1101M bytes
Average Latency: 8.33 ms

MSU0501 MASS STORAGE UNIT (Cont'd.)

Performance Characteristics (Cont'd.)

Seek Time:
Minimum - 10 ms
Average - 25 ms
Maximum - 50 ms
Transfer Rate: 1597K cps; 1065K bytes per second
Recording Mode: MFM (Modified Frequency Modulation)
Bit Density: 6436 bpi
Track Density: 662 tpi
Spindle Speed: 3600 rmp
Supplies
Nonremovable disk modules: 2 per unit

Physical Characteristics
Height: 44.4 in. (112.7 cm)
Width: 42.0 in. (106.6 cm)
Depth: 33.3 in. (84.5 cm)
Weight: 1100.0 lb (498.9 kg)

Electrical Charateristics
Voltage: 208 Vac, 3-phase
Frequency: 60 Hz
Power Consumption: 2.7 kVA
Heat Generation: 7300 Btu/hr

Environmental Characteristics
Operating Temperature: 50 to 100 degrees F (10 to 38 degrees C)
Relative Humidity: 10% to 80% (noncondensing)

Cables (max)
MSU to MSP: 75.0 ft. (22.9 m)
Power Cord: 15.0 ft. (4.6 m)

VIDEO

(Visual Information Display for Efficient Operation)

The VIDEO program is a direct access privileged slave program which displays operating statistics on a VIP terminal or a System Control Center (TY5 in the $CONFIG section of the start-up deck).

Normally, the VIDEO program is kept on a spawn file for ease of use. Once the program has been spawned and is in execution, it may be connected to a VIP77Ø5 as follows:

```
$**$LOG24,VIDEO
```

The first connection must be from a VIP terminal. Up to 3 additional connections may be made from VIP's or teleprinter devices. A teleprinter connection is treated as a mailbox inquiry.

VIDEO DISPLAY CONTENT

DISPLAY FORMAT

VIDEO data is displayed at either the status display console and/or at VIP terminals that are connected to VIDEO program. The VIDEO display is formatted in five columns as illustrated.

TITLE LINE

ALLOCATION STACK	EXECUTION STACK	REMOTE STACK	SYSTEM SCHEDULER STACK	SYSTEM OUTPUT
			PERIPHERALS STACK	
	SYSTEM STATUS			
TSS USER STACK	INFORMATION	I/O USAGE		

The information displayed in each of the display fields is described separately. If the number of entries in either the allocation, execution, or system output stack exceeds the display line limit, **MORE** displays as the last line. Excess entries are included with the next display change.

DISPLAY CONTENT

he below illustrates formatted system status information reported by he VIDEO program.

```
SYSTEM STATUS  SYS-ID    2300        2 PROCESSORS 1024K    12/03/83   13.
AITING-  14    EXEC-  13   MU  %% URG  RMTS-   2   SCHED-  1-      SYOT 17
 0435Z-01 ALC : $SCALC       5:  2:    : JO STOLT 0 :.HOLD     1    : 6670T C
 0437Z-01 ALC : $PALC       41:  5:31  : XX VIDEO 1 :                : 6697T C
 0436Z-01 ALC : $GEOT       31:  0:62  : G1 VIDEO 1 :                : 6759T C
 0425Z-02 PER : $SCHD       26:  0:62  :            :                : 6822T C
 0426Z-02 PER : $RGIN       10:  0:62  :            :                : 6870T C
 0427Z-02 PER : TS1$ -01    60:  1:61  :            :                : 6896T C
 0438Z-01 ALC : $PSYS-00    13:  0:63  :            :                : 6905T C
 0432Z-01 ALC : $GSYS        9:  0:59  :            : PERIPHERALS    : 6923T C
 0433Z-01 ALC : X    -01    13:   :60  :            :   ST6-RLSED    : 6930T C
 0439Z-01 ALC : SHARD-01   182:  0: 5  :            :   LP1-RLSED    : 6975T C
 0429Z-02 PER : 0424Z-02    21: 12: 5  :            :   LP2-RLSED    : 6937T C
 0428Z-00 ALC : 0434Z-01    32:   : 5  :            :   1T1-         : 6984T C
 0430Z-01 ALC : 0417Z-02    21: 22: 5  :            :   1T2          : 6990T C
 0431Z-00 ALC :                        :            :   1T3-         : 6993T C
              :                        :            :   1T4-         : 6997T C
              :                        :            :   1T5-         : 7104T C
              :                        : FMS%-  71  :   PR3-RLSED    : 7211T C
              :                        : TAP%-  49  :   CR5-RLSED    : 7281Z C
              :                        : DSK%- 163  :   PR1          : 7283T C
TSS-  2 ( 1.0):                        : JOBS-  42  :   PR2-DEDCT    : 7399T C
RG  0 WAIT  0 : IDLE-      304   9:    : TAPES-  5  :   CR1-         : 7467T C
ETON       GH 1: GCOS-     131: 40:    : DISK-  10K :   CP1-RLSED    : **MORE*
```

TITLE LINE

he title line includes the system name, software release, number of onfigured processors, amount of configured memory, current date, and ime of day. The system name is that which is contained on the $ SYID tatement in the Startup job stream.

VIDEO DISPLAY CONTENT

ALLOCATION STACK

The allocation stack column identifies the status of each job that is awaiting allocation. The first line of the column specifies the number of jobs awaiting allocation (e.g., WAITING - 6). Each subsequent line contains three fields.

Field	Description
1	Memory (in 1K blocks) required by the job; blank if memory not required.
2	The job's SNUMB and the number of the activity that is awaiting resource allocation.
3.	Job Status.

Status Code	Meaning
ALC	New job is awaiting allocation
COR	Job is waiting for memory
DSC	Job is waiting for a disk drive
HLD	Job is in hold status
LIM	Job is in limbo status
MNT	Job is waiting for a magnetic tape to be mounted
OVD	Job is waiting for peripheral allocation; despite job priority, the required peripherals are busy
PCH	Job is waiting for a card punch
PER	Job is waiting for peripheral allocation
PPT	Job is waiting for a paper tape reader
PRM	Job is waiting for a permanent file
PRT	Job is waiting for a line printer
PR4	Job is waiting for a PRU1600 printer
RDR	Job is waiting for a card reader
RES	Job is waiting to be restored
RMT	Job is being read into memory from a mass storage file
SIE	Job is in sieve status
TP7	Job is waiting for a seven-track magnetic tape unit
TP9	Job is waiting for a nine-track magnetic tape unit

An asterisk (*) preceding the status code indicates the job has a priority of 40 or more.

VIDEO DISPLAY CONTENT

TSS USER STACK

The TSS user stack identifies the Time Sharing System users that are active in the system on any version of TSS. The information in this stack appears in the following sequence:

- First Line

  The first line of this stack displays the number of active user identifications and the average response time.

- Second Line

  The second line displays the number of urgent users and the longest urgent wait time.

- Remaining Lines

  The remaining lines of the stack contain a display of each user identification (unless the station code is blank-filled), the station identification (DEF if the user is deferred or "!!" if waiting for a disconnected user), and the TSS version number (1 through 4).

  NOTE: A maximum of eight user identifications can be displayed on the screen at one time. If the number of user identifications exceeds the maximum allowed, the excess will be displayed on subsequent screen displays.

VIDEO DISPLAY CONTENT

EXECUTION STACK

The execution stack column identifies the status of each job that is in execution. The first line of the column specifies the number of jobs in execution (including jobs that are swapped). Each subsequent line identifies the job in execution and contains five fields.

Field	Description
1	Job SNUMB.
2	Job activity number. During termination processing, the number is changed to "T".
3	Memory Utilization. MMM - Memory allocation to job in execution (number of 1K pages allocated to the job). Will include "SWP" when job is swapped.
4	Percentage of processor utilization. NNN - Percent of total processor used by job in execution since last screen display which included this job. This field will be blank when VIDEO first encounters the job with "in execution" status.
5	Job urgency.

EXAMPLES:

S1234-Ø1 44/ 2/Ø5

Job is in activity Ø1, using 44K of memory, 2% of total processor utilization, and has urgency of Ø5.

S2345- T 12/ 1/2Ø

Job is either in activity or termination processing, using 12K of memory, 1% of total processor utilization, and has urgency of 2Ø.

S3456-15 24/WSP/Ø5

Job is in activity 15, using 24K of memory, is swapped, and has urgency of Ø5.

If more jobs must be displayed, **MORE** is specified and the status of each additional job is reported.

VIDEO DISPLAY CONTENT

EXECUTION STACK

Two informative lines are displayed at the bottom of the execution stack about the GCOS system. The first line list the amount of idle (available) memory and the percentage of processor idle time since the last screen display. The second line lists the amount of memory used by the GCOS system and the percentage of processor overhead time since the last screen display.

NOTE: The sum of memory utilization column (MU) may not show the exact total amount of memory configured, because of memory allocated for other purposes not displayed by VIDEO or of jobs excluded from DISPLAY by the NDSP option. Also, the sum of the processor utilization column (%%) may not show the exact theoretical total of 100 (percent) times the number of assigned processors.

VIDEO DISPLAY CONTENT

REMOTE STACK

The remote stack column identifies remote connections to specific programs. The first line lists the total number of remote connections including time sharing users. Subsequent lines list the line identification, the program name to which the line is connected (CTS if waiting for connection to slave or IDL if line is idle), and the number of the FNP through which the line is connected. A maximum number of 15 remote connections can be displayed on one full screen; if the number to be displayed exceeds 15, **MORE** will appear at the bottom of the column and the remainder will be displayed in the next update of the screen.

On the same column following the remote stack, additional information is provided about the GCOS system. If the FMS catalog cache option is in use at the time, the percentage of cache bits will be displayed opposite "FMS%-" on the first line. The next five lines contain the following information in the sequence indicated:

TAP%- Approximate tape channel busy time since last screen display.

DSK%- Approximate disk channel busy time since last screen display.

JOBS- Total number of jobs executed since last boot or last "HISTRE" console command.

TAPES- Number of available tape handlers.

DISK- Amount of available working disk space in links. (The suffix "K", if shown, represents 1000 times the value displayed.)

VIDEO DISPLAY CONTENT

SYSTEM SCHEDULER STACK

The system scheduler stack column identifies the status of each job that is awaiting scheduling. The word SCHED appears on the first line of the column with the number of jobs in the scheduler. However, if the System Scheduler program is swapped out of memory, the count will be zero and no classes will be displayed.

The second line of the column specifies the maximum (MAX) and minimum (MIN) number of jobs that can be scheduled at any one time. The MAX and MIN values are specified on the $ SSLOAD statement in the Startup job stream.

Each subsequent line in this column specifies the number of jobs in individual scheduler classes.

Code	Description
.EXPRS	Express class
.HOLD	Hold class
nnnnnn	All other classes (i.e., .TASK, .TRANS, and all site-defined (.user) classes)

VIDEO DISPLAY CONTENT

PERIPHERALS STACK

"PERIPHERALS" is displayed on the first line. Each subsequent line contains a logical device name and the device's status.

Status Code	Meaning
Blank	The device is unused.
sssss	SNUMB (sssss) of the job using the device.
DEDCAT	This is a dedicated device.
RLSED	The device is released from the system.
$GEIN	The device is being used for system input.
ACCNT	The device is being used as a Statistical Collection File (SCF).
FLSYS	The device is a dedicated mass storage device containing permanent files.

If the number of peripheral devices in use exceeds the number of display lines available, **MORE** is displayed. The unreported devices are included when the display changes.

VIDEO DISPLAY CONTENT

SYSTEM OUTPUT STACK

The system output stack column contains the status of the system output dispenser program ($GEOT).

The first line of the display is formatted as follows:

SYOT - bbbb nnnn

where: bbbb = the number of jobs that contain unfinished output.

If either number of SYSOUT blinks (bbbb) or the number of jobs (nnnn) exceeds 9999, four asterisks (****) will be displayed.

The rest of the lines in the SYSOUT portion of the display are used to give status information on as many as 100 oldest jobs in SYSOUT. If the number of jobs exceeds the capacity of the eight detail display lines, **MORE** is displayed after the last line. Additional jobs are reported on the next update of the display. Each job's individual display line is formatted as follows:

sssss ORSJT

where: sssss = job's SNUMB

O = online output waiting (i.e., has unfinished online output)

R = remote output waiting (i.e., has unfinished remote output)

S = delivery started on some part of output

J = waiting for JOUT

T = tape copy or purge waiting to start or in process

Each indicator O, R, S, J, and T occupies a fixed position when the stated condition is true. Otherwise, the position is blank.

VIDEO OPTIONS

KEYBOARD/DISPLAY TERMINAL

Options available for the VIDEO program are entered after forcing a Break at the keyboard/display terminal. The Break is forced by entering the following control record at the terminal.

```
$**$BRK
```

The VIDEO program responds by transmitting the screen image.

```
TIME: nn SECS
LINE: m
MAIL: ***
MESS: ***
MODS: mod
OPTION?
```

where:

- nn – Current update frequency of data in seconds ($1 \leq nn \leq 63$).
- m – Current number of lines connected to LSTAL.
- *** – Status of mailbox and all points bulletin, ON or OFF.
- mod – Current mode indicator is *NRM (normal) or *CON (continuous)

In response to the OPTION? query, the operator should enter a device option. The option verb is the first four nonblank characters in the input stream. For verbs longer than four characters, only the first four characters are displayed. If the option entered is illegal, VIDEO responds WHAT? and waits for a valid option to be entered. A verb of all blanks is ignored. When the verb changes the state of a problem, the initial assumption is noted.

SCC TERMINAL

On a SCC configured for VIDEO operations, the input request is initiated by pressing the KEYBOARD SELECT push-button to switch to the channel connected to TY5 and pressing the REQ key on the keyboard. VIDEO responds with:

VIDEO?

The operator may then enter any of the VIDEO options.

The option verbs and their functions are as follows:

- VOCAB — Causes a list of all valid VIDEO options to be sent to the requesting terminal. Following this display, VIDEO requests another option.
- nn — Change update interval to value (in seconds) given as nn ($1 \leq nn \leq 63$). If value exceeds 63, 63 is used as the update interval.
- *NRM — Places VIDEO in continuous mode and VIDEO updates display according to the specified sampling interval. This verb is used to return VIDEO to normal mode from continuous mode. The normal mode uses the sampling interval in effect at the time continuous mode was initiated.
- *CON — Places VIDEO in continuous mode and VIDEO updates display after transmitting a screen image to the terminals. Time between updates depends mainly on the number of lines connected. This mode is cancelled by entering a new sample time or by entering *NRM.
- *EOJ — Terminates VIDEO as follows: (1) disconnects all lines, (2) issues KILLS request, and (3) terminates via MME GEFINI.
- ABORT — Terminates VIDEO via MME GEBORT. The allocator patch is replaced by wrapup.
- NEW — Allows additional terminals to access VIDEO. This option is used only to cancel the NONEW option.
- NONEW — Prevents new terminal accessing VIDEO. A terminal attempting to access VIDEO receives the message *VIDEO LINE TABLE FULL, even if the table is not full.

VIDEO OPTIONS (Cont'd.)

SCC TERMINAL (Continued)

- o TIME ABCD — Indicates computer system unavailability as follows:

  1. Sends following message to all lines.

     System UNAVAILABLE UNTIL time

  2. Disconnects all lines.

  3. Waits for new control line.

- o LINES — List the line identifications as follows:

  CURRENT LINE ID'S:I1,I1,...,1n

  VIDEO then requests another option.

- o DISC ID — Disconnects the line identified by ID from VIDEO. If the specified line is not connected to VIDEO, the request is ignored.

- o NDSP options — Prevents display of SNUMB. Options are:

  ADD SNUMB
  REM SNUMB
  CLR

  VIDEO places SNUMB's specified in this verb in a table and does not display them. The REM SNUMB option removes SNUMB from this table. The CLR option erases this table.

- o MESS options — Stores and outputs a message to all connected keyboard/display terminals at a specified interval.

  LOAD
  OFF
  ON
  FREQ nn

  The LOAD option is used to load the message and VIDEO issues the following message to the requesting terminal:

  READY MAXIMUM SIZE IS 8 LINES

VIDEO OPTIONS (Cont'd.)

SCC TERMINAL (Continued)

The operator responds with a message up to eight lines long. VIDEO continues to update all other terminals while waiting for message input. When the message is input, it is transmitted every n (n initially 10) updates in place of the status information. The frequency can be changed using the FREQ nn option, with $1 \leq nn \leq 31$. If nn = 0, the request is ignored; if greater than 31, 31 is used. The OFF option stops message transmission, but does not disturb the contents of the message buffer. The ON option reactivates the message. If MESS ON is used and the buffer is empty, the request is ignored.

- o MAIL options — Provides a message for teletypewriter terminals. The options are:

  LOAD
  OFF
  ON

  VIDEO stores and outputs a message to any teletypewriter terminal that attempts to access VIDEO. Following the message, the terminal is disconnected. When the LOAD option is used to load a message, VIDEO responds:

  READY MAXIMUM SIZE IS 6 LINES

  The operator enters a message up to six lines long. VIDEO continues updating the screen image while waiting for the message to be input. If the message buffer is empty on a connect request, VIDEO sends the terminal a message, followed by a disconnect.

  *VIDEO: MAILBOX EMPTY

  The OFF option prevents transmission of the message loaded via LOAD, but does not disturb the contents of the message buffer. The ON option is used to restore message transmission.

SCC TERMINAL (Continued)

In addition to the message sent to the terminal, VIDEO also sends a system summary which is identical to a VIDEO screen display. The STAT OFF option blocks this summary transmission. The STAT ON option restores the summary transmission.

- STAT OFF/ON — STAT OFF blocks the transmission of the system summary to the terminal (see MAIL options). STAT ON restores this transmission.
- DATE — VIDEO resets the display date from .CRDAT.
- TSSU ON/OFF — Displays Time Sharing System user identifications. the options are:

  ON
  OFF

  VIDEO displays the Time Sharing System user identifications unless TSSU OFF is entered as option. It resumes the display when the TSSU ON option is exercised.
- SWAP ON/OFF — SWAP ON causes VIDEO to set its urgency to Ø so that it can be swapped out. SWAP OFF is used to return from the SWAP ON condition.
- MOVE — Permits an operator to move an interactive system console name to a SCC. A request entered at a system console to move an interactive system console function (TY1, TY2, TY3, or TY4) to TY5 is denied if TY5 is currently assigned to VIDEO. However, if the request is made to VIDEO, VIDEO relinquishes control of the SCC to accomplish the move. MOVE requests for interactive system console functions cause the following:

  1. Validation of the request.
  2. Association of the system name with a different device in the System Name Table.
  3. Removal of .MPOPM's GESPECed I/) queue (associated with that name) from the old SCT.
  4. Link of this I/O queue to the new device SCT.

RLP 300 Switches and Indicators

OPERATORS CONTROL PANEL (FRONT). The Operators Control Panel (Front) is shown in the illustration below.

POWER ON. Applies main AC/DC power to the printer, turns on the format tape lamp, stop indicator, power-on indicator, and fault indicator.

POWER OFF. Removes AC/DC power from the printer, causing all lamps and indicators to be turned off.

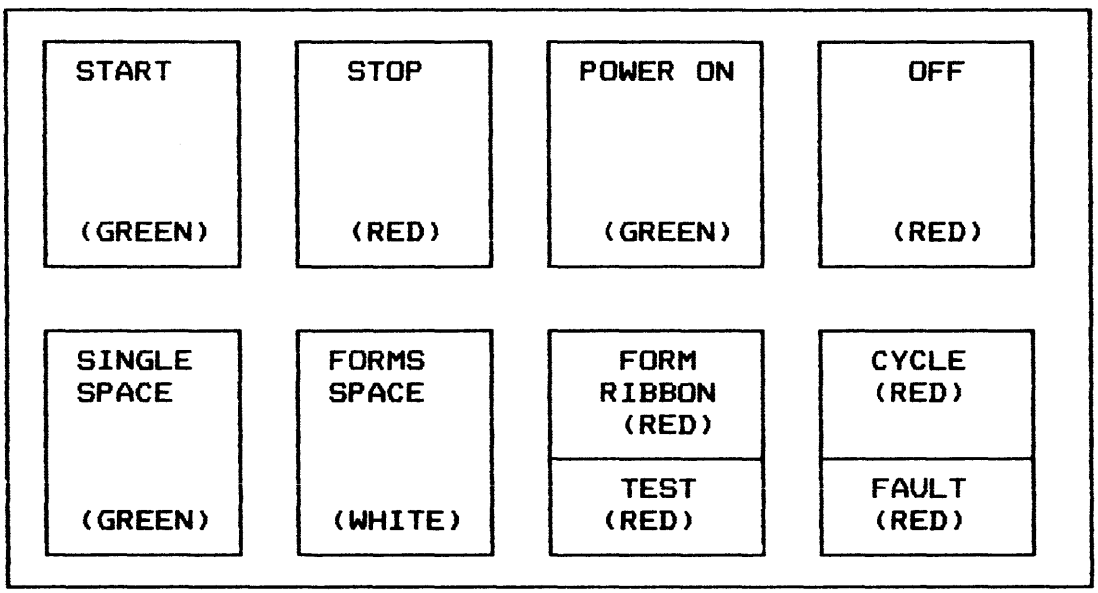

Figure 8-7. RLP 300 Operators Control Panel (Front)

START. Allows the printer to receive instructions from the control unit if no other interlocks are active.

STOP. Stops printing after the completion of the current command and will not allow instructions to be received from the control unit.

SINGLE SPACE. If in a controlled stop condition, this switch will advance the forms one line each time it is depressed.

FORM/RIBBON. Indicates that an out-of-paper condition exists or a ribbon foldover condition exists.

RLP 300 (Cont'd.)

Operators Control Panel (Front) - Continued

TEST. This indicator will be turned on when any one of the following conditions exist: the on-line/off-line toggle switch is set to off-line; the force cycle/normal switch is set to normal; or the coupling switch is set to disengaged.

FAULT. This indicator will be turned on when any one of the following conditions exist: the format tape lamp is burned out; the type-roll housing is not completely closed; a cycle check error exists; there is an open circuit breaker; the coupling switch is disengaged; or one of the maintenance panel error indicators is lit.

Operators Control Panel (Rear)

The Operators Control Panel (Rear) is shown in Figure 8-8, below.

FORM SPACE. If in a controlled stop condition, this switch will advance the forms to top of page each time it is depressed.

START. Allows the printer to receive instructions from the control unit if no other interlocks are active.

STOP. Stops printing after the completion of the current command and will not allow instructions to be received from the control unit.

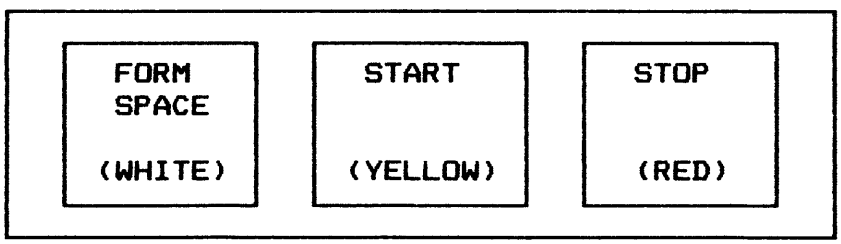

Figure 8-8. RLP 300 Operators Control Panel (Rear)

NOTE: These switch/indicators are duplicated on the front operators control panel and perform the same function as those on the front panel.

RLP 300 (Cont'd.)

Auxiliary Control Panel

The Auxiliary Control Panel is shown in Figure 8-9 below.

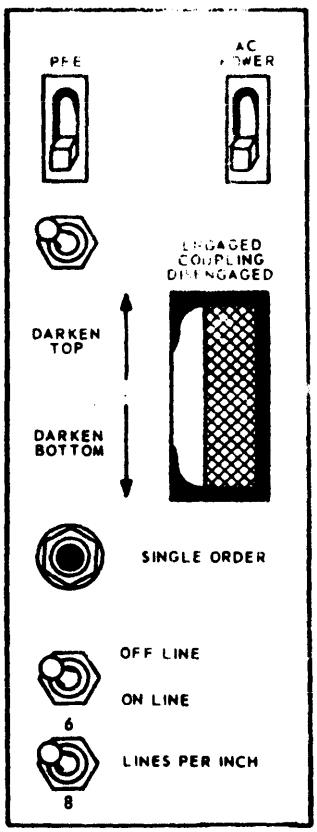

RLP 300 (Cont'd.)

OFF-LINE/ON-LINE. When toggle switch is set to off-line, the printer goes into test mode. When set to on-line, the printer goes into normal operating mode.

DARKEN TOP/DARKEN BOTTOM. This knob changes the timing of the print fire stroke. When the knob is rotated toward the darken top, the characters will print darker on the top and vice-versa.

SINGLE ORDER. This switch allows a single print order when the form indicator is lit. Continued depression will allow single print orders until the end of form code is sensed on the format tape.

PFE ON/OFF. This circuit breaker is normally on. If the paper feed engine current exceeds 5 amperes, it will go to the OFF position and must be reset before operation can continue.

AC POWER ON/OFF. This curcuit breaker is normally on. If the line current exceeds 15 amperes, it will go to the OFF position and must be reset before operation can continue.

COUPLING ENGAGED/DISENGAGED. This toggle switch will allow vertical positioning of the form feed tractors without affecting the format tape mechanism when set to the disengaged position.

Maintenance Control Panel

The Maintenance Control Panel is shown in Figure 8-10 below.

PFE. An indicator that lit when there is an open circuit breaker in the paper feed engine power supply.

FAN. Indicates that airflow from one of the cooling fans drops below minimum requirements.

NOTE: Printer will power down if airflow is low for more than 5 seconds.

DC. Indicates when DC power is off.

PRINT/SPACE ONLY. This switch allows or inhibits printing in the off-line mode. It is used in conjunction with the HOF SKIP/SINGLE SPACE switch.

RLP 300 (Cont'd.)

Maintenance Control Panel (Continued)

HOF SKIP/SINGLE SPACE. This switch selects either a skip to heading of form or a single line space. It is used in conjunction with the print/space only toggle switch.

PRINT REG ERROR. This switch indicates a DC power failure in one of the print registers. It is turned off when the error reset or power off switch is depressed.

BUFFER/ERROR. Indicates a failure in the buffer register. It is turned off when the buffer/error reset switch is depressed.

ACTUATOR FAULT CURRENT. This switch indicates that an overcurrent failure has occurred in one or more of the hammer actuators. It can be reset by depressing the actuator fault current reset switch or by depressing the POWER OFF button and then the POWER ON button.

EMERG STOP. Indicates that a format tape lamp failure has occurred. To turn the indicator off, the error condition must be corrected.

FORCE CYCLE/NORMAL. Used by the field engineer in the test mode. It must be in normal for normal operation.

RLP 300 (Cont'd.)

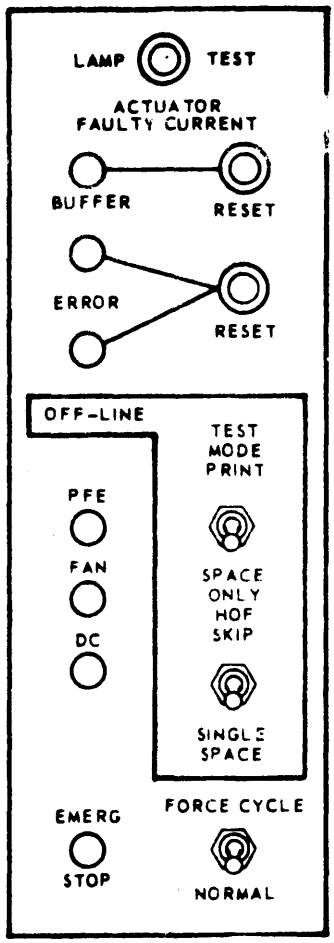

RLP 300 Forms Adjustment Controls

1. Upper/lower form tension - uses three settings (L, LESS TENSION; H, MORE TENSION; N, NORMAL) to adjust upper and lower forms tension. Misadjustment of the upper forms tension can seriously affect the vertical character registration.

2. Forms thickness control - changes the width of the gap between the paper guide and the paper table to allow the use of different types of paper.

RLP 300 (Cont'd.)

Forms Adjustment Controls (Continued)

3. Vertical position handwheel - allows vertical motion of both tractor assemblies to position paper at desired vertical location.

4. Horizontal forms control - moves both tractor assemblies laterally to position paper in desired horizontal position.

5. Horizontal forms tension - used to adjust the horizontal tension of the forms.

6. Forms alignment guide - aids in the vertical registration of the print line with respect to the vertical positioning.

DATANET 6661

FRONT-END NETWORK PROCESSOR

The DATANET 6661 Front-End Network Processor (FNP) provides large-volume network communications power for Honeywell's GCOS, GCOS 8, and Multics based family of computers. The DATANET 6661 FNP, in conjunction with the Remote Terminal Supervisor-II (GRTS-II) or with the Network Processing Supervisor (NPS), provides a functional separation of information and communications processing activities.

Designed using Honeywell's minicomputer technology for space savings, performance improvement, greater reliability, and easier serviceability, the DATANET 6661 FNP is logically compatible with system software and user-generated programs of the DATANET 6600 family of front-end network processors.

The DATANET 6661 FNP provides the variety of interfaces required by the elements and protocols of a distributed system, as well as a facility for dialog with the central system. By performing the tasks of message management and message handling the 6661 FNP frees the host system for other processing functions. The resources of the host system are called upon only when a message is submitted for information processing. However, some networking functions (e.g., a message switch) can be accommodated by the 6661 FNP without any involvement of the host information processor. The innate flexibility of a stored-program processor, couples with the functionality provided by Honeywell's data communications software, has been the keystone to the evolution of Honeywell's network processor philosophy.

SYSTEM DESCRIPTION

As Figure 1 illustrates, the primary components of the 6661 FNP are the processor, input/output multiplexer, and memory.

Processor

The central processing unit operates asynchronously under firmware control. Its instruction repertoire is designed for efficient processing of a wide variety of communications network applications and is fully compatible with the instruction sets of the DATANET 6641, DATANET 6651, and DATANET 6678.

DATANET 6661

FRONT-END NETWORK PROCESSOR (Cont'd.)

Input/Output Multiplexer

The FNP input/output multiplexer (IOM) performs all operations required for the transfer of data between input/output devices and the FNP memory. The IOM is shown in the diagram as an interface between the system bus (to processor and memory) and the I/O bus (to which the various I/O devices are connected). Attached to the I/O bus are the System Support controller for the console and network processor diskette; the Direct Interface Adapter, which provides connection to the host system; and the optional Peripheral Interface Adapter, which provides access to the host system's high-performance mass storage processor (required when NPS is selected as the FNP operating system). The remaining input/output connections are to the Channel Interface Bases, through which the network devices enter the system. Internally, the IOM operates asynchronously in an interrupt-driven fashion.

Memory

The high-speed, random-access, semiconductor memory subsystem of the FNP performs all storage functions without restrictions on address sequences, data patterns, or repetition rates. Memory features include single- and double-word fetch, self-contained initialize and refresh logic, and standard EDAC (Error Detection and Correction) functionality.

DATA COMMUNICATIONS FUNCTIONS

The hardware and software of the DATANET 6661 FNP are designed to optimize the management of communications traffic entering or leaving the system through specific hardware adapters. There are several data communications hardware and software options available.

Channel Interface Base

The Channel Interface Base, in conjunction with the channel options, provides the line interfacing arrangements necessary to accommodate terminals with various data transfer rates, bit orders, bits per character, information codes, character sets, message formats, and communications control procedures. Low-, medium-, and high-speed data communications terminals and subsystems, capable of operation at up to 72,000 bits per second, can be connected to the system. In addition, synchronous and asynchronous transmissions, and any combination of half-duplex and full-duplex transmission modes are supported. To meet various functional requirements, the FNP can accommodate as many as either 4, 8, or 12 Channel Interface Bases, depending on available configurability options ordered. Each channel Interface Base supports as many as 8 communications lines.

DATANET 6661

FRONT-END NETWORK PROCESSOR (Cont'd.)

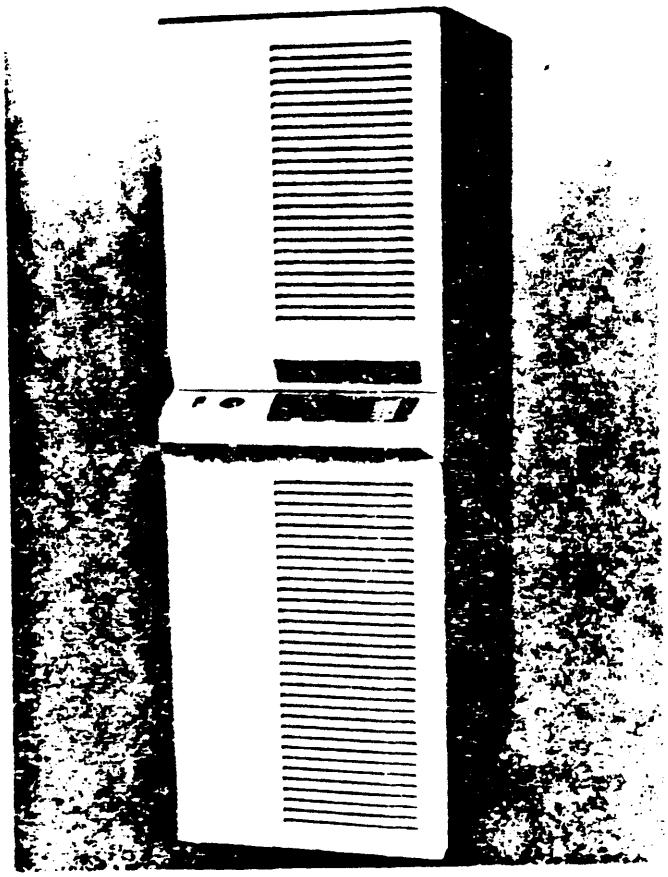

DATANET 6661

FRONT-END NETWORK PROCESSOR (Cont'd.)

Communications Channels

- The Channel Interface Base accepts as many as four (except as noted) of the communications channels listed below, in any combination.
- Channel Interface, Asynchronous 20 mA Current Loop (DCF6610)-dual channel up to 9600 bps.
- Channel Interface, Dual Synchronous EIA RS-232-C (DCF6611)-dual-channel package, up to 9600 bps each.
- Channel Interface, Dual Asynchronous EIA RS-232-C (DCF6612)- dual-channel package, up to 9600 bps each
- Channel Interface, Auto Call Units (DCF6613)-dual-channel Auto Call Units
- Channel Interface, Dual Asynchronous MIL-STD 188C (DCF6614)-one channel up to 9600 bps
- Channel Interface, Dual Asnynchronous MIL-STD 188C (DCF6615)-dual-channel package, up to 9600 bps each
- Channel Interface, Broad Band MIL-STD 188C (DCF6616)-one channel up to 72,000 bps
- Channel Interface, HDLC MIL-STD 188C (DCF6617)-one channel up to 9600 bps
- Channel Interface, Dual Bisynchronous (DCF6618)- dual-channel package, upt to 9600 bps each
- Channel Interface, Broad Band (DCF6619)-one channel up to 72,000 bps
- Channel Interface, HDLC Voice Grade (DCF6620)-one channel up to 9600 bps
- Channel Interface, Bisynchronous Broad Band (DCF6621)- one channel up to 72,000 bps
- Channel Interface, HDLC Broad Band (DCF6622)-one channel up to 72,000 bps
- Channel Interface, HDLC CCITT, V.35 (DCF6623)- one channel up to 72,000 bps
- Channel Interface, Broad Band CCIT, V.35 (DCF6627)-one channel up to 72,000 bps

DATENET 6661

FRONT-END NETWORK PROCESSOR (Cont'd.)

Network Software Systems

Either the Remote Terminal Supervisor-II (GRTS-II) or the Network Processing Supervisor (NPS), depending upon network requirements, can control the operation of the FNP and provide a software interface to the host system. GRTS-II is a low-overhead system for users who do not need the full networking capabilities of NPS. Both NPS and GRTS-II support remote job entry, message concentration, transaction processing and time sharing dimensions. NPS offers facilities for unique device control parameterization and other features for outstanding customization. By utilizing an FNP Peripheral Interface Adapter with the host system's mass storage processor, NPS can provide journalization and message switching capabilities.

The Multics Communications System can control the operation of the FNP and provide a software interface to the host system. The Multics Communications System is a flexible system that offers easy device customization for any asynchronous device, through device tables. The system supports remote job entry and several synchronous and bisynchronous protocols.

MODULAR GROWTH

A basic DATANET 6661 FNP includes 64K bytes of memory and can be expanded to 512K bytes. There are two processor power enhancements available. The first increases power up to 47% and the next provides up to an additional 82%. Multiple FNPs, each with its own memory and with or without its own performance enhancement option, may be configured.

By adding FNPs the user can gain:

- Added capacity
- Redundancy protection
- Greater system availability
- Network software selection (GRTS-II in one FNP; NPS in another)

DATANET 6661

FRONT-END NETWORK PROCESSOR (Cont'd.)

SPECIFICATIONS

PHYSICAL CHARACTERISTICS FOR 32-LINE OR 64-LINE CONFIGURATION:
Width - 30.0 in. (76.2 cm)
Depth - 35.0 in. (88.9 cm)
Height - 61.0 in. (154.9 cm)

PHYSICAL CHARACTERISTICS FOR 96-LINE CONFIGURATION:
Width - 60.0 in. (152.4 cm)
Depth - 35.0 in. (88.9 cm)
Height - 61.0 in. (154.9 cm)

OPERATING TEMPERATURE RANGE: 32 to 122 degrees F (0 to 50 degrees C) ambient

RELATIVE HUMITITY TOLERANCE: 5% to 95% without condensation

ELECTRICAL REQUIREMENT: 120 Vac at 60 Hz

MANUAL PERIPHERAL SWITCHES

SERIES 60
LEVELS 66 & 68

Several types of Manual Peripheral Switches are available as options for Level 66, 66/DPS, 68 & 68/DPS information systems. These switches afford considerable configuration flexibility and help to avoid system interruption. They perform two basic services:

- Permit selective switching of input/output hardware to rearrange the I/O resources to match changing workloads.
- Provide a convenient means for switching a peripheral, where necessary, to bypass malfunctioning I/O controls or channels within systems having equipment redundancy.

FUNCTIONS

The various Manual Peripheral Switches fall into two functional types:

- Those that switch complete peripheral subsystems between I/O channels: sometimes used to share one I/O channel between two peripheral subsystems.
- Those that switch devices in a multidevice peripheral subsystem between two peripheral processors.

OPERATION

To switch a peripheral such as a printer between unit record processors A and B, the operator presses a push button to actuate the switch connecting the cable from the printer to either the cable for unit record processor A or the cable for B.

Switching of a peripheral processor channel between either of two central system Input/Output Multiplexer (IOM) channels is accomplished in similar fashion, with the switch unit connecting the peripheral processor cable to either of two cables to the IOM channels.

MODULARITY

One or more Manual Peripheral Switches can be added to a site as more switching capability is needed.

MANUAL PERIPHERAL SWITCHES (Cont'd.)

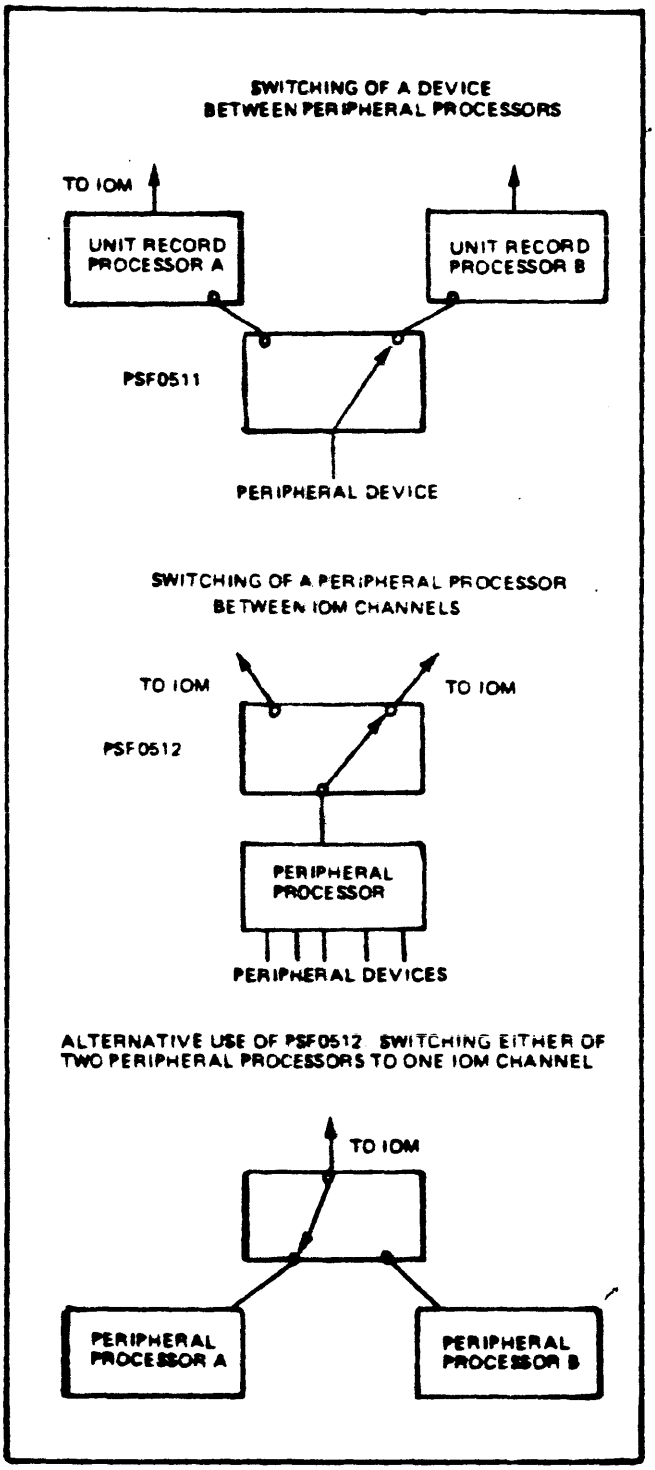

MANUAL PERIPHERAL SWITCHES (Cont'd.)

SWITCHING EQUIPMENT

Manual Peripheral Switch Consoles and the switching options available to them include:

PSU0200 - Manual Peripheral Switch Console with a capacity for up to 16 switch units. PSU0200 includes one switch unit, PSF0512, which switches a peripheral processor channel between either of two central system IOM channels. The additional IOM channel required is included with PSF0512.

PSU0201 - Manual Peripheral Switch Console with a capacity for up to 16 units. PSU0201 includes one switch unit, PSF0511, which switches a peripheral device between either of two peripheral processors. No IOM channel is included.

PSF0511 - Peripheral Device Switch. No IOM channel is included.

PSF0512 - Peripheral Processor Channel Switch. PSF0512 includes PSI channel for connection to second IOM.

CSU6601 SYSTEM CONSOLE

The multipurpose CSU6601 System Console for Honeywell's 66 DPS and Distributed Processing System 8 (DPS 8) computer family combines advanced computer technology and modern design conveniences resulting in the following operating features:

- Direct operator control of the total system
- Efficient easy-to-use switches and indicators (optional)
- High performance components

DIRECT OPERATOR CONTROL

The System Console is a freestanding unit with several key features, such as a 12-inch cathode ray tube display, interactive message transfer, and direct communication with the operating system. For added operating ease, the console connects to a console channel of the Input/Output Multiplexer (IOM) and is controlled just as a peripheral system.

EFFICIENCY AND EASE OF USE

The System Console is designed for efficiency and ease of use. The operating software generated easily understood messages to inform the operator that the system has performed some action the operator should be aware of or that the operator should perform some specific action to allow further processing. The messages requiring response are repeated until the operator answers.

Additionally, the System Console handles messages that:

- Indicate a printer is available
- Activate a console alarm
- Reset the operator attention alarm
- Indicate data transmission
- Signal data transmission error
- Activate a bootload procedure
- Cause system initialization

HIGH PERFORMANCE COMPONENTS

The System Console offers high performance components to meet the processing demands of large system users.

Console Keyboard

The console keyboard uses solid state, reliable key design and supports an average typing rate of 20 characters per second. The keyboard is arranged in conventional typewriter layout and includes 26 alphabetic, 10 numeric, and 28 special characters.

CSU6601 SYSTEM CONSOLE (Cont'd.)

Alphabetic, numeric, or special character keys generate corresponding code at the keyboard interface. The keyboard normally generates lowercase alphabetic character codes. The character code for punctuation symbols (in the upper portion of the keyboard) and uppercase letters is generated when the shift key is pushed at the same time the key is struck.

Special keys let the operator directly:

- Signal the system to disregard the last message
- Shut off the operator attention alarm
- Request permission to enter a message
- Indicate completeness of an input message

Operator's Interactive Display

Keyed data and system-generated inquiries and responses appear on a 12-inch cathode ray tube display. The display has a capacity of 1920 characters (24 lines of 80 characters per line) and projects a clear, bright image without glare. The system requires only a few seconds to fill the entire screen with information.

Printer

A 120-character-per-second dot matrix printer generates a hard copy log of all console activity. The printer handles forms with up to three carbons and has low noise levels and a highly reliable printing mechanism. The printer uses the American Standard Code for Information Exchange (ASCII) code set with a character set of seven-bit ASCII, plus one additional bit for parity.

Console Table

A console table is optionally available for added operator convenience. Included is a control and indicator pod consisting of:

- Emergency power disconnect switch
- Initialize switch
- Bootload switch
- Processor activity indicator(s)
- DIS indicator

CSU6004 SYSTEM CONSOLE

SERIES 60
LEVELS 66/DPS & 68/DPS

Honeywell's multipurpose CSU6004 System Console combines advanced computer technology and modern design conveniences resulting in the following operating features:

- Direct operator control of the total system
- Efficient, easy-to-use switches and indicators
- High performance components

DIRECT OPERATOR CONTROL

The System Console is a freestanding unit with several key features, such as interactive message transfer, continuous run status display, and direct communication with the operating system. For added operating ease, the console connects to a console channel of the Input/Output Multiplexer (IOM) and is controlled just as a peripheral system.

EFFICIENCY AND EASE OF USE

The System Console is designed for efficiency and ease of use. The operator enjoys more than four square feet of working space.

The status display panel contains a full range of easy-to-read controls, switches, and indicators. See-only-when-necessary, color-coded indicators eliminate operation confusion.

Controls and Switches
Local, Online
Emergency Power Off
System Boot
Initialize
Lamp Test
Alarm Reset

Indicators
Attention
Run Indicator (meter)
Input
Power On
Over Temperature

CSU6004 SYSTEM CONSOLE (Cont'd.)

The operating software on each level generates easily understood messages to inform the operator that the system has performed some action the operator should be aware of, or that the operator should perform some specific action to allow further processing. The messages requiring response are repeated until the operator answers.

Additionally, the System Console handles messages that:

- Indicate a printer is available
- Activate a console alarm
- Reset the operator attention alarm
- Indicate data transmission
- Signal data transmission error
- Activate a bootload procedure
- Cause system initialization

An optional remote unit displays information shown on the printer.

HIGH PERFORMANCE COMPONENTS

The System Console offers a wide variety of high performance components to meet the processing demands of large system customers.

Printer

A 30-character-per-second dot matrix printer generates hard copy. A 120-character-per-second printer (CSF6023) is also available. Either speed printer handles forms with up to three carbons and both have low noise levels and highly reliable printing mechanisms. The printers use the American Standard Code for Information Exchange (ASCII) code set with a character set of seven-bit ASCII, plus one additional bit for parity.

Each printer contains a print line buffer to mask the carriage return time, resulting in an effective 30 cps and 120 cps capability.

Console Keyboard

The console keyboard uses solid state, high reliability key design and supports an average typing rate of 20 characters per second. The keyboard is arranged in conventional typewriter layout and includes 26 alphabetic, 10 numeric, and 28 special characters.

CSU 6004 SYSTEM CONSOLE (Cont'd.)

Alphabetic, numeric, or special character keys generate corresponding code at the keyboard interface. The keyboard normally generates lowercase alphabetic character codes. The character code for punctuation symbols (in the upper portion of the keyboard) and uppercase letters is generated when the shift key is pushed at the same time the key is struck.

Special keys let the operator directly:

- Signal the system to disregard the last message
- Shut off the operator attention alarm
- Request permission to enter a message
- Indicate completeness of an input message

Remote Display

A 23-inch (58.4 cm) remote display monitor is available, as an option, for viewing information away from the console. Displayed information is an image of the console printer output. The remote display can be located as far as 1000 feet (304.8 m) from the console.

The CSU6004 System Console and the Remote Display can also be used with any Series 6000 information system configuration.

APPENDIX D

SWITCH SETTINGS

AND

RECONFIGURATION

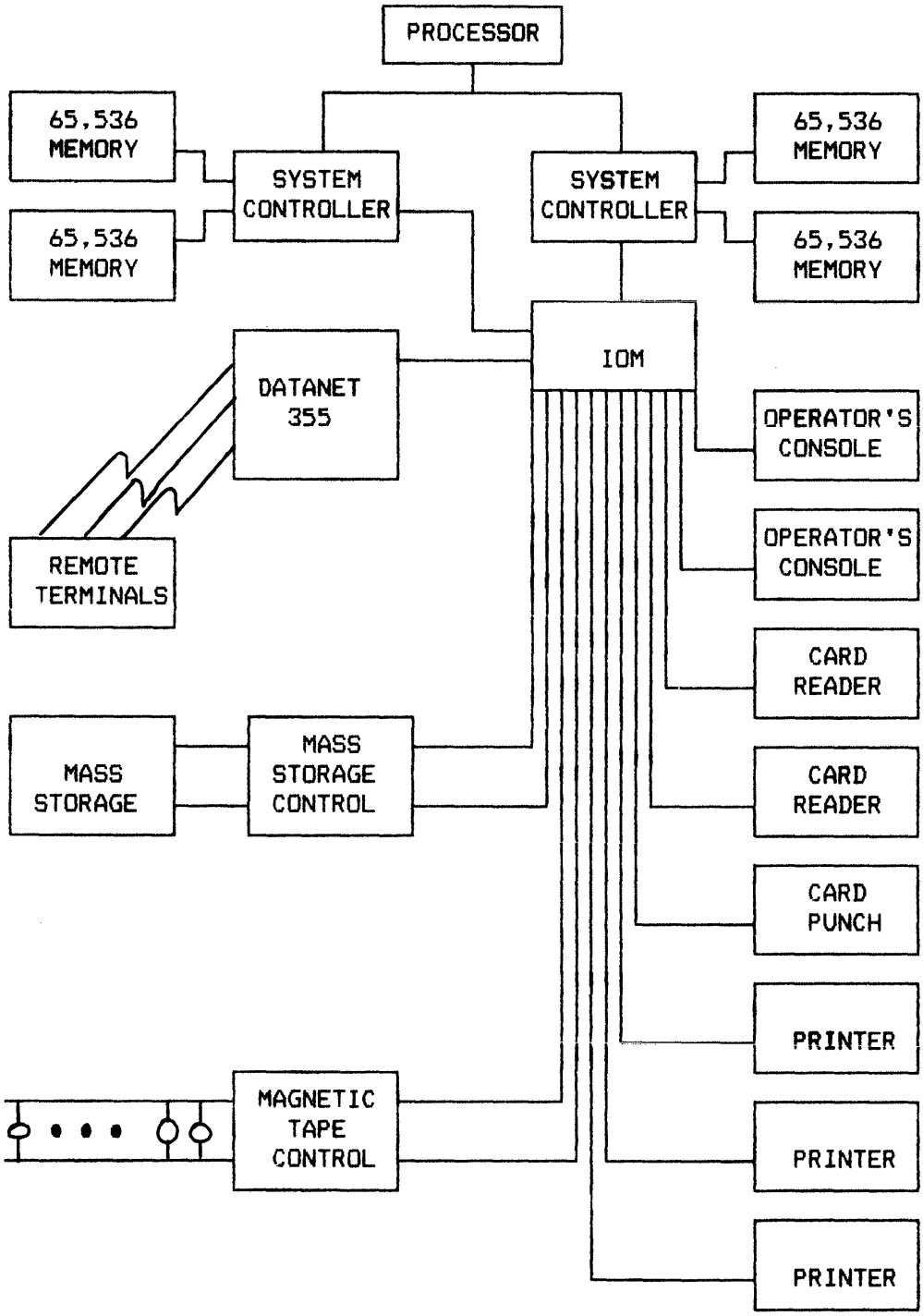

LARGE UNIPROCESSOR CONFIGURATION

SWITCH SETTINGS AND RECONFIGURATION

HARDWARE CONFIGURATION

SYSTEM CONTROL UNIT (SCU)

SCU-0

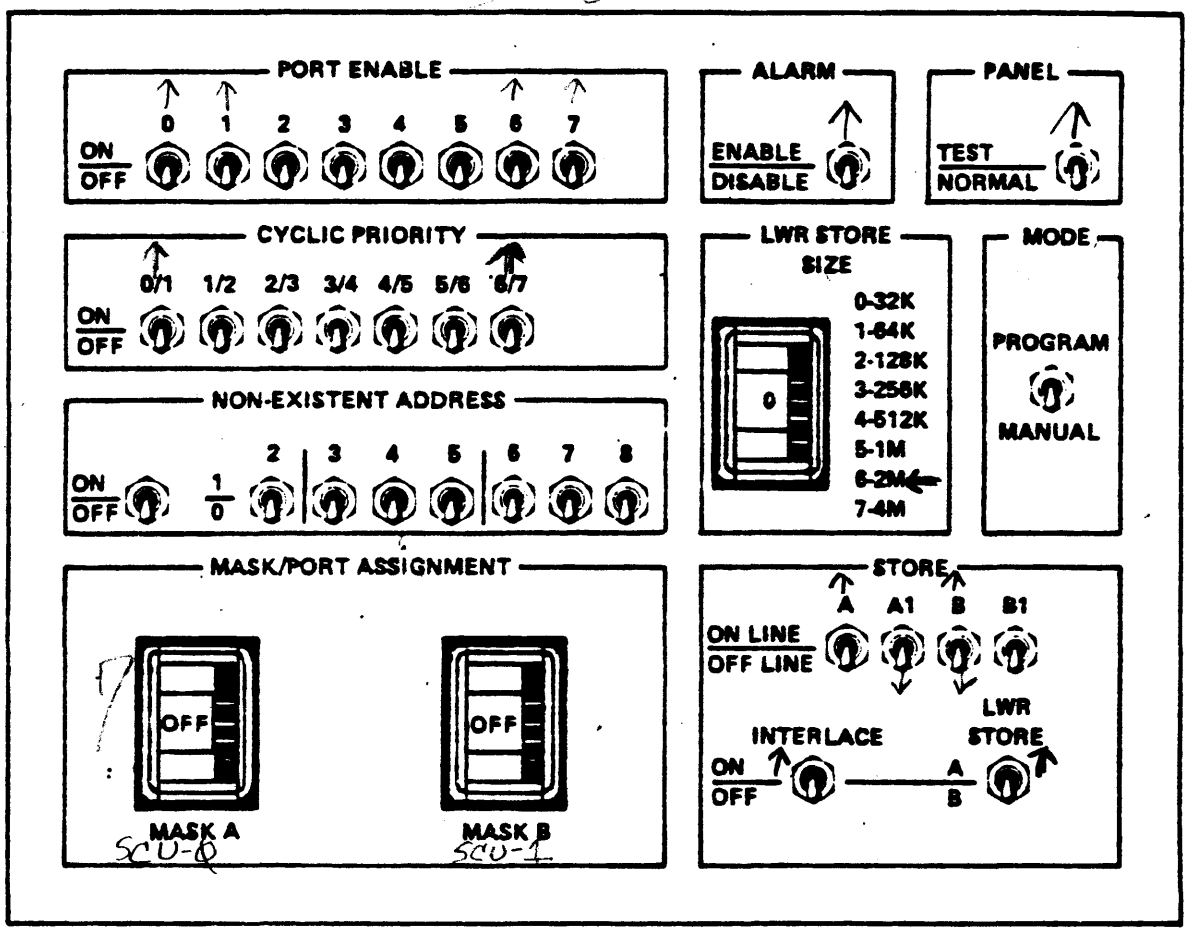

* = only used if unequal store sizes

VALUES OF NON EXISTANT ADDRESS SWITCHES

SWITCH NUMBER

8 = 32K

7 = 64K

6 = 128K

5 = 256K

4 = 512K

3 = 1M

2 = 2M

see also 19 #1-7 for chart

CONFIGURATION

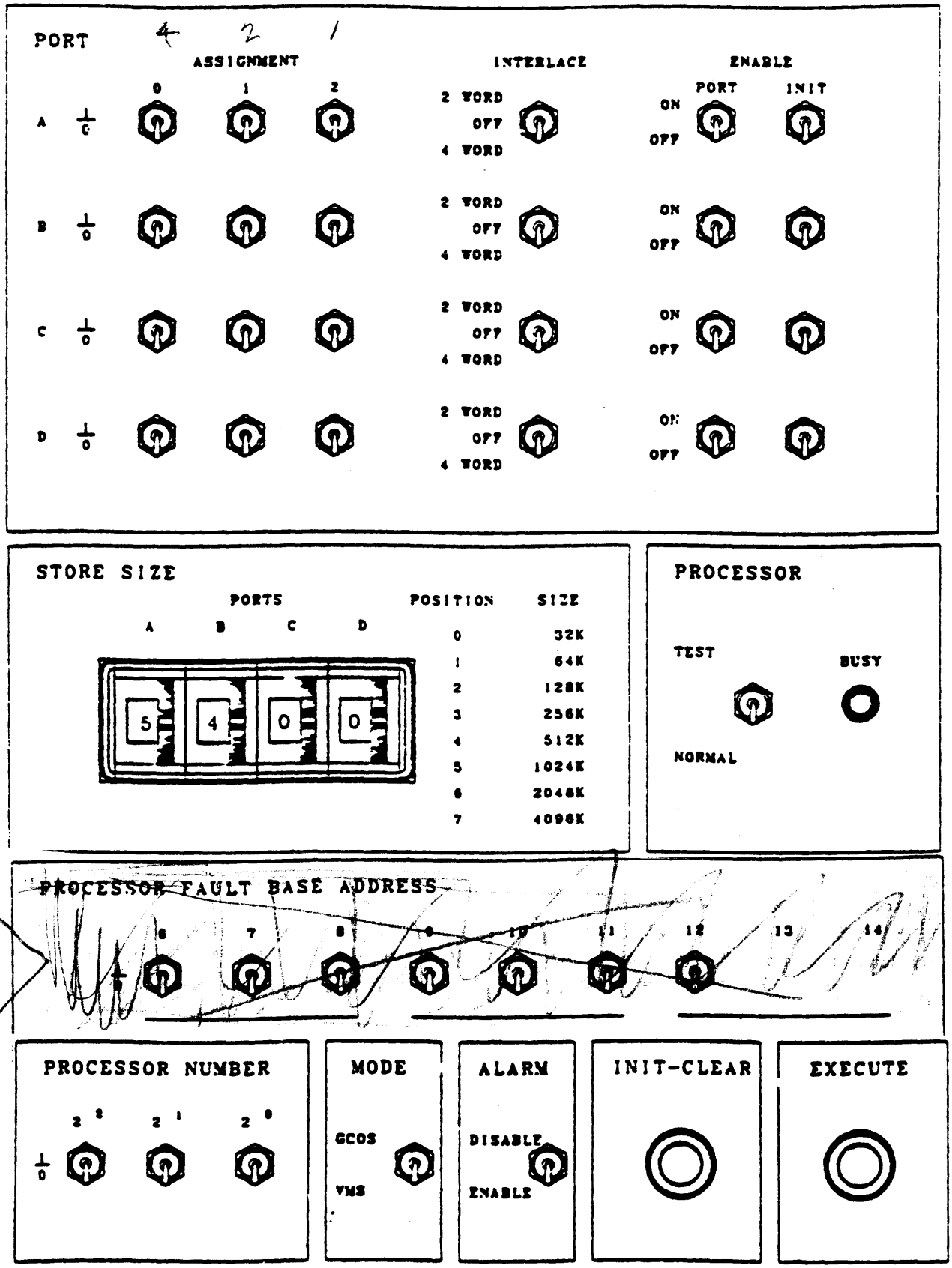

CONFIGURATION PANEL DPSE PROCESSOR

HARDWARE CONFIGURATION

NEW IOM PANEL

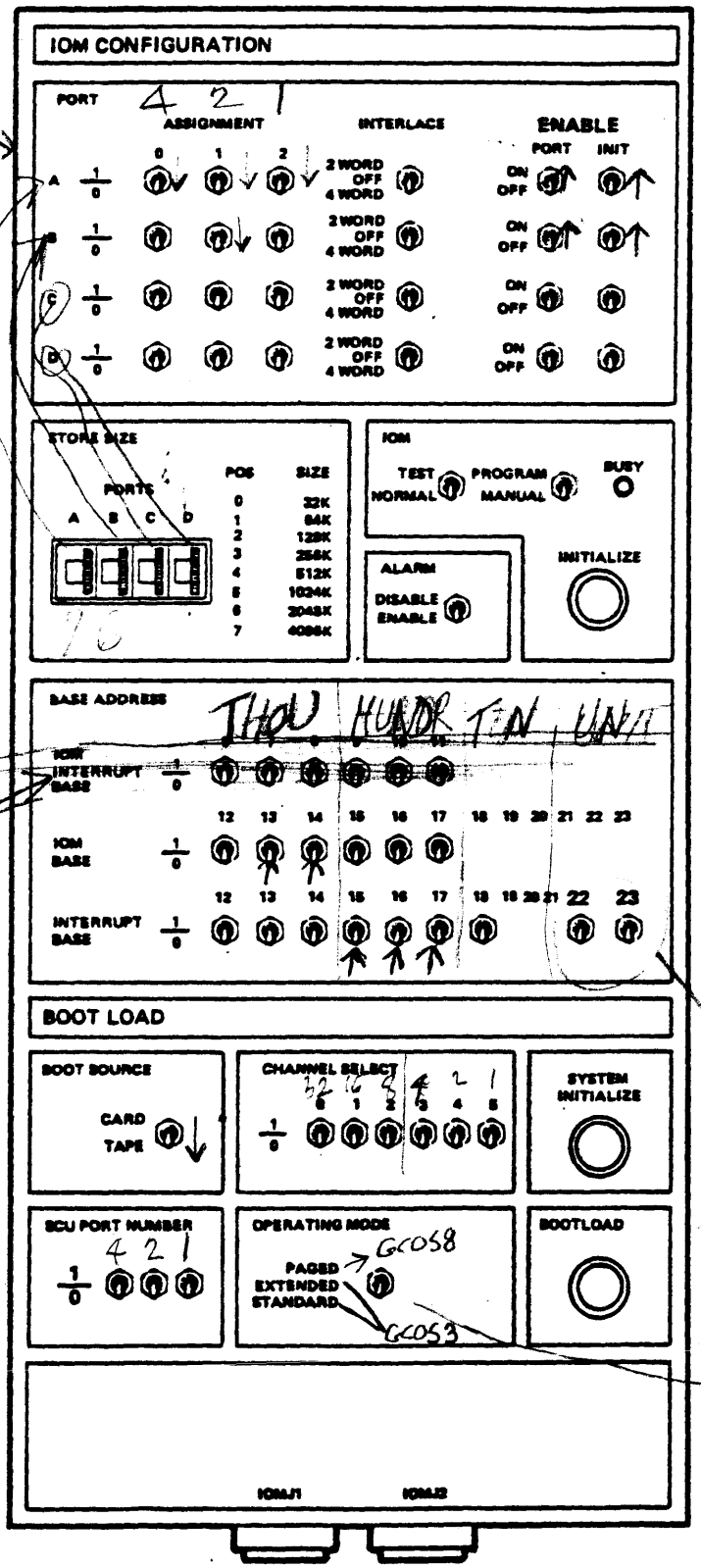

chart, page E2

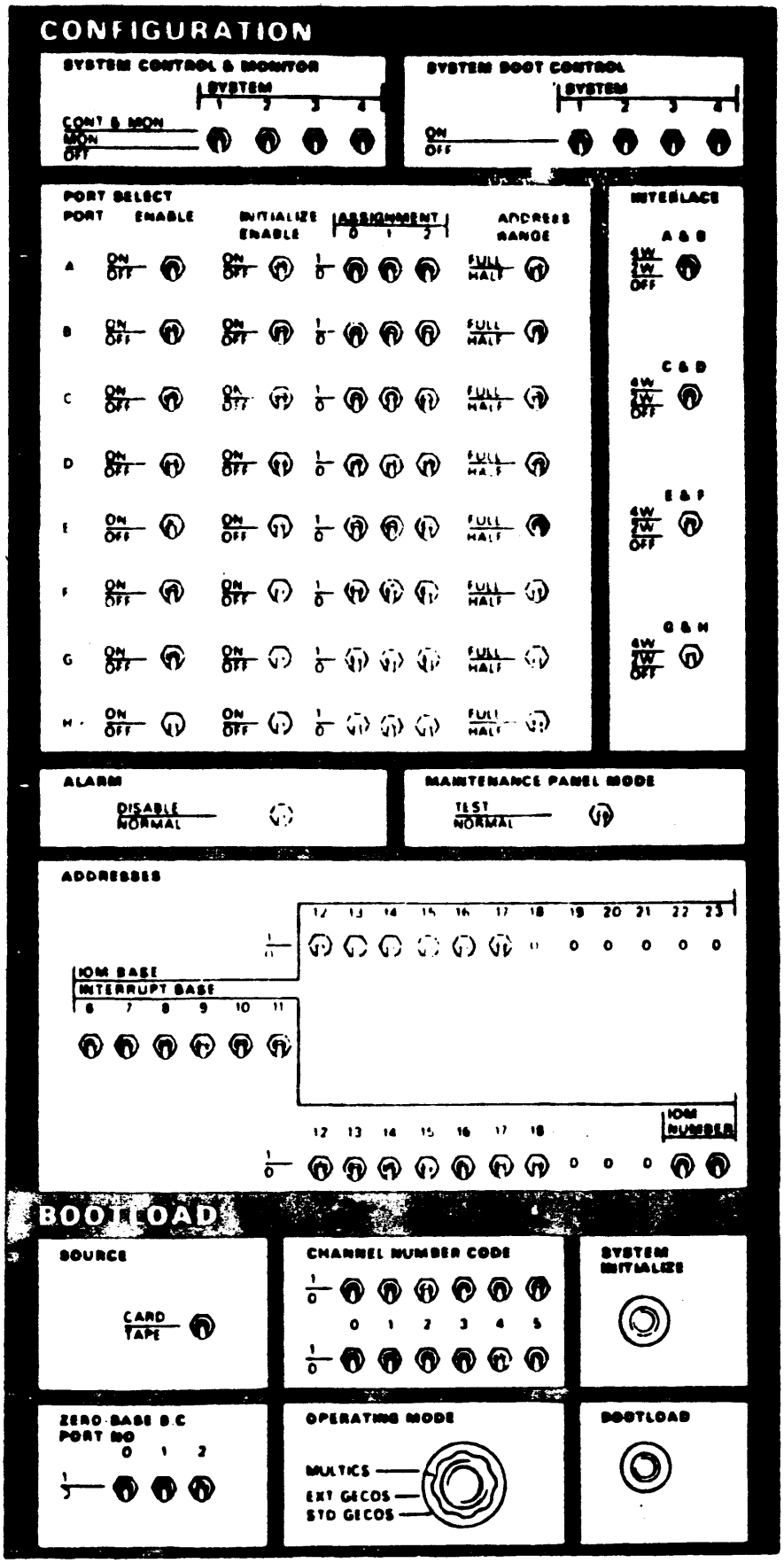

IOM CONFIGURATION AND BOOTLOAD PANEL

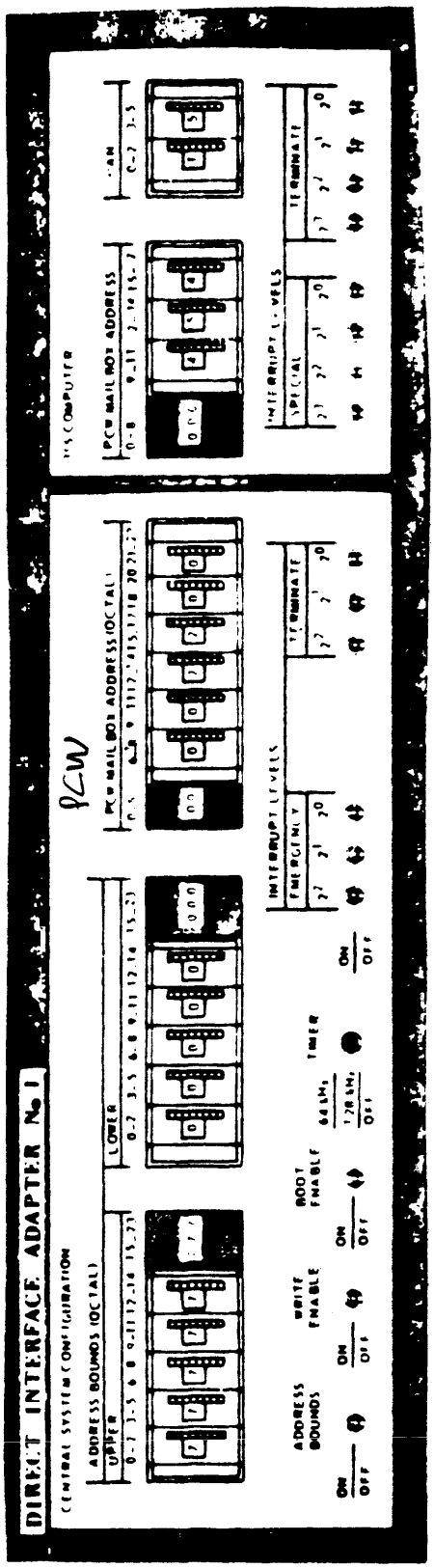

DIRECT INTERFACE ADAPTER (DIA) CONFIGURATION PANEL

DATANET 6600 FRONT-END NETWORK PROCESSOR (FNP)

DIA CONFIGURATION MICRO SWITCHES

LOCATED ON LS BOARD FREE-EDGE

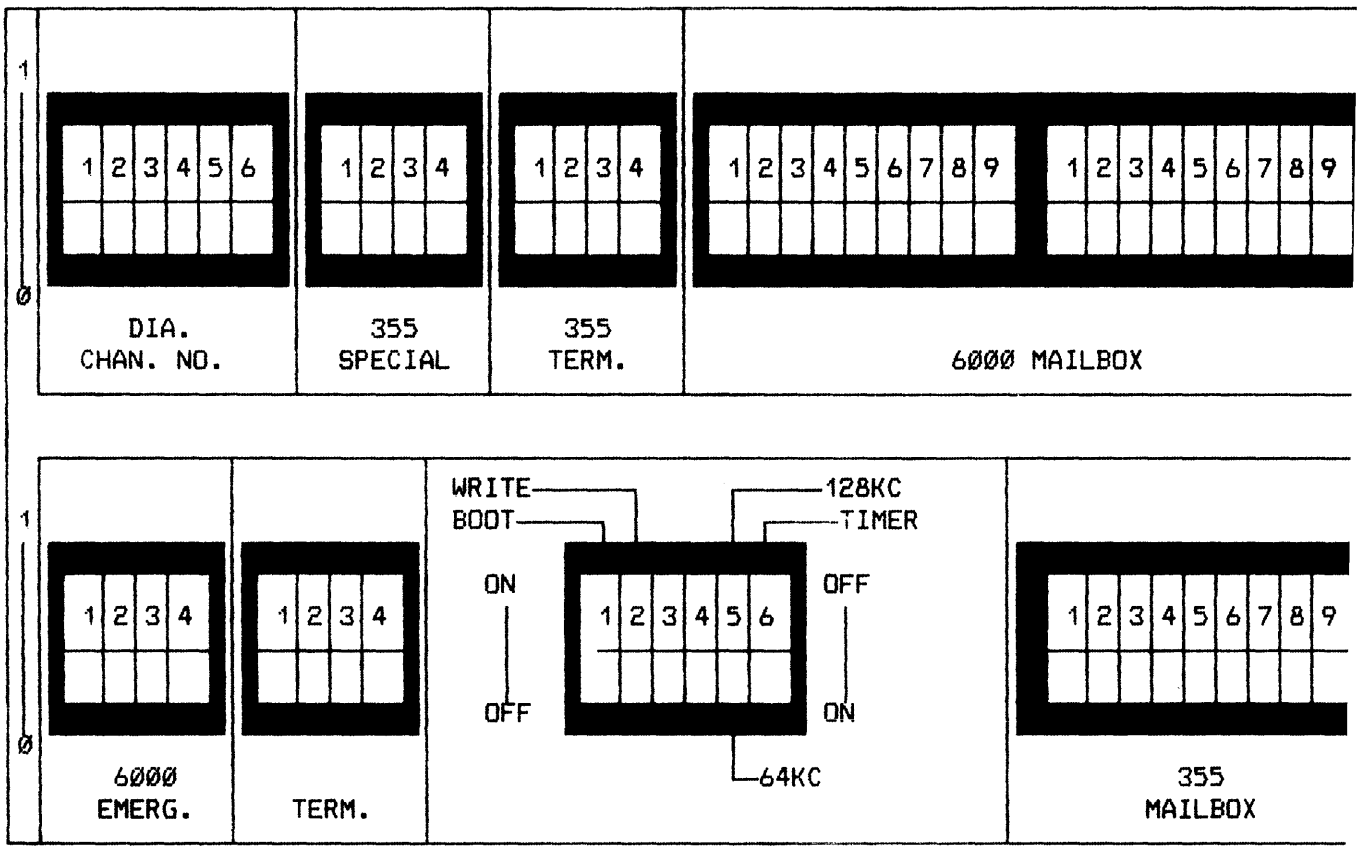

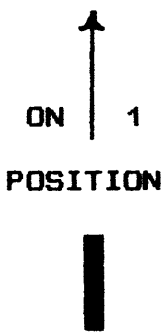

HARDWARE CONFIGURATION

DATANET CONFIGURATION PANEL

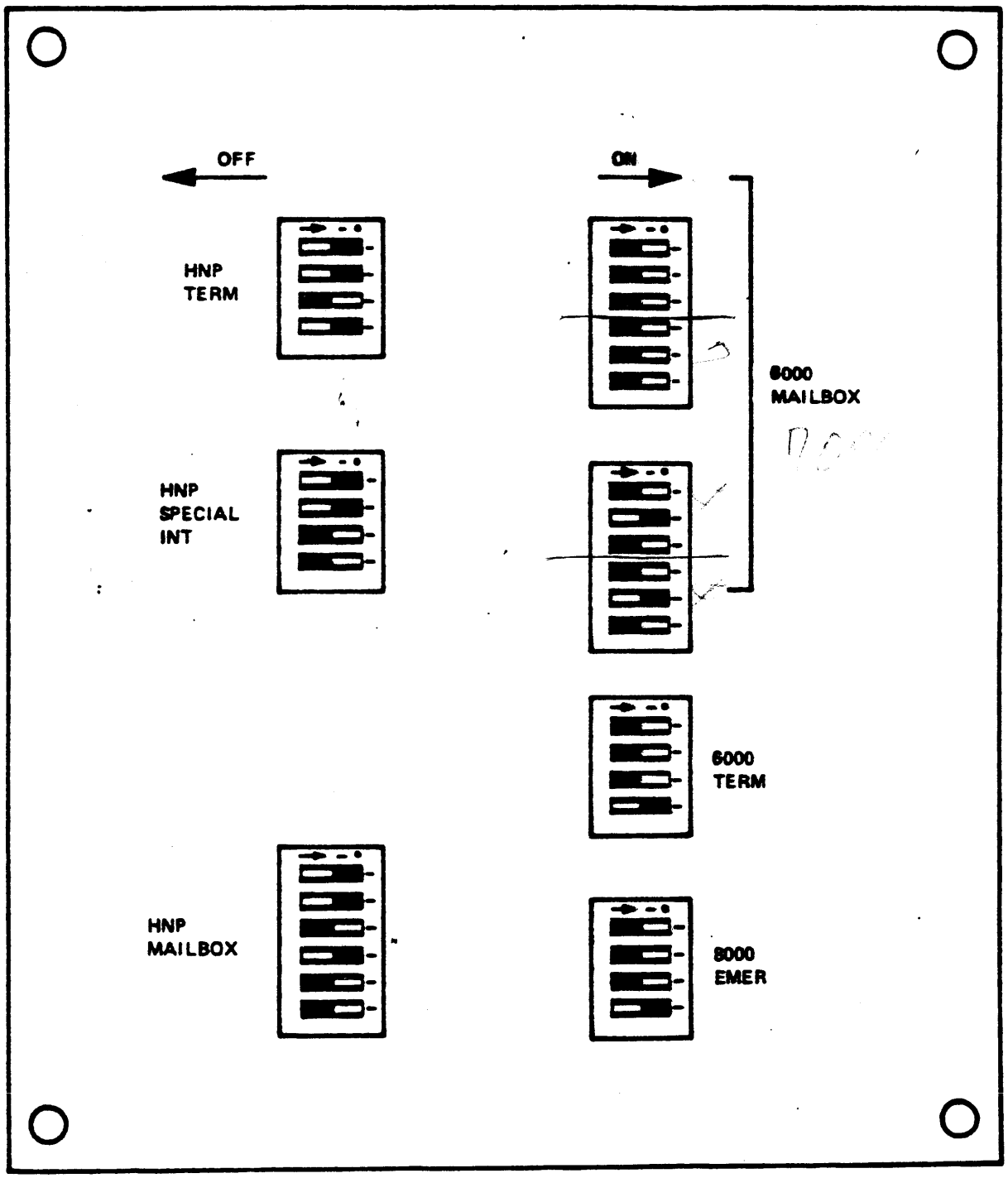

PROCESSOR MODULE

The processor module provides full program execution, conducts all actual data processing within the series 6000 system, and communicates with the system controller. It consists of an operations unit and a control unit. The operations unit logic executes all arithmetic and logic operations for the processor. The control unit provides the interface with the system controllers and provides control functions such as instruction fetch, address preparation, address modification, memory protection, data fetch, and data store. The relatively independent operations unit and control unit operate with maximum overlap to provide as high instruction execution rate. Four input-output ports permit the processor to interface four system controllers.

INPUT-OUTPUT MULTIPLEXER (IOM) MODULE

The input-output multiplexer coordinates all input-output operations between the memory module and the peripheral subsystems and provides complete memory protection for all data transfers. Each data channel may function completely independently and with its own individual memory assignment.

In its minimum configuration, the IOM can interface eight data channels. Additional options can be added to bring this capability up to 24 data channels. The IOM processes the necessary instructions, data, and status information on a demand/priority basis. (The data channels for later references are numbered 0 through 31 and are also called Peripheral Unit Buffers (PUBs). PUBs 0 through 7 are used strictly for the special channels and are not used for system peripherals.)

DATANET 355 COMMUNICATION SUBSYSTEM

The DATANET 355 Communication Subsystem, a stored program communication processor, is designed as a central system module for the series 6000 systems. One DATANET 355 subsystem can control up to 200 separate terminals, and multiple DATANET 355 subsystems can interface a single series 6000 system. The DN355 offers a wide range of terminal options and line speeds. Communication line adapters for both low-speed (up to 300 BPS) and high-speed (up to 50,000 BPS) lines permit the DN355 subsystem to interface any mixture of line speeds and terminal types. The DN355 interfaces your series 6000 system through the IOM via a direct interface adapter (DIA).

CONFIGURATION SWITCH DESCRIPTIONS

OPERATOR PANEL

The processor, memory, input-output multiplexer, and DATANET 355 are equipped with identical sets of indicators and pushbutton/indicators for starting and stopping the device. These operator controls are described below in figure 3-4 which shows the operator's panel.

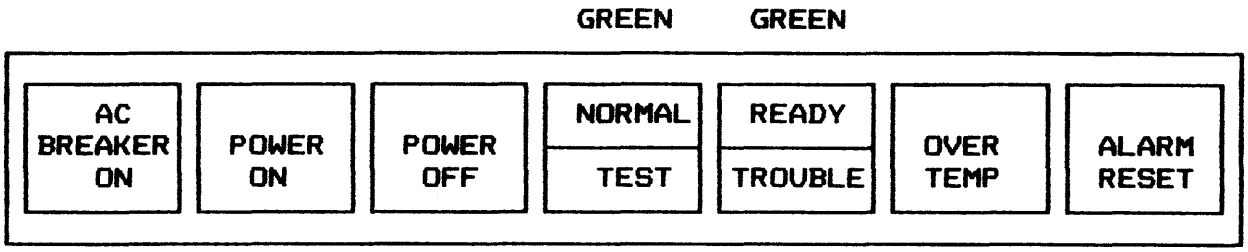

OPERATOR'S PANEL

- o AC BREAKER ON - This indicator is lighted when the main AC circuit breaker is closed for the device.
- o POWER ON - This pushbutton switch indicates the power-on sequence for the device. The indicator light is on when power is on.
- o NORMAL/TEST - This two-part indicator indicates the setting of the TEST/NORMAL switch on the device's configuration panel.
- o READY/TROUBLE - This two-part indicator indicates normal operation (READY) or malfunction (TROUBLE).
- o OVERTEMP - This indicator lights when the temperature in the device exceeds the maximum operating limits. This indicator stays on until the overtemperature condition is corrected.
- o ALARM RESET - This pushbutton/indicator lights when the audible alarm sounds. It is pressed to reset the alarm and turn off the indicator.
- o POWER OFF - This pushbutton/indicator initiates the power-off cycle. The indicator remains on as long as the AC circuit breaker is closed with AC power off.

SYSTEM CONTROLLER

The system controller configuration panel, see figure 3-5, contains the following switches:

- o STORE A - MODE and SIZE
- o STORE B - MODE and SIZE
- o NON-EXISTENT ADDRESS
- o CYCLIC PRIORITY
- o PORT ENABLE
- o MASK/PORT ASSIGNMENT
- o LOWER STORE
- o INTERLACE
- o ALARM DISABLE
- o TEST/NORMAL

There are two MODE (three-position toggle) switches, one for STORE A and one for STORE B. The three positions function as follows:

- o ON LINE - Normal operating position. In this position, the memory can be accessed by the system controller ports.
- o MAINT - Maintenance position. The memory cannot be accessed by a system controller port, but it can be accessed by the system controller maintenance panel test logic.
- o OFF LINE - Not accessible by the system controller. This position effectively removes the memory from the system.

The two SIZE switches STORE A and STORE B are used to set the size of the store unit. The maximum amount of core per SCU is 4MW or 2MW maximum in STORE A and 2MW maximum in STORE B. These switches are used in conjunction with the LOWER STORE toggle switch to determine their role.

LWR STORE SIZE SECTION

One thumbwheel switch labeled Ø-32K, 1-64K, 2-128K, 4-512K, 5-1M, 6-2M, 7-4M. This switch assigns the lower starting addressees to the memory on the port selected by the LWR STORE A/B switch on the STORE section. The lower starting addresses are assigned to the port with the larger memory size. For example, if the memory, A or B, to be assigned the lower starting addresses is 256K then the switch is set to 3. If the exact memory size is not selectable with the switch, then the NON-EXISTENT ADDRESS switches are set to the exact memory size.

NON-EXISTENT ADDRESS SECTION

Eight toggle switches labeled 2, 3, 4, 5, 6, 7, 8, ON/OFF, Ø/1. The switches 2 through 8 notify the software of the size of the total memory connected to the SCU if the memory size cannot be determined exactly by setting the LWR STORE SIZE thumbwheel switch. The switches are assigned the following values:

2	3	4	5	6	7	8
2ØØBK	1Ø24K	512K	256K	128K	64K	32K

For example, if the memory size in 384K the switches are set as follows:

	2	3	4	5	6	7	8
1							
0							

In the ON position, the associated ON/OFF switch enables the non-existent address (NEA) fault logic. If an address is equal to or greater than the setting of switches 2 through 8, and NEA fault occurs.

The INTERLACE toggle switch enables interleaving between two memory parts of the same size. In other words, memory addresses are alternated between store units (address 0&1 in STORE A, 2&3 in STORE B, etc.). This effectively increases the number of memory accesses available to a processor or IOM. The LOWER STORE switch is inactive when the INTERLACE switch is on.

The eight PORT ENABLE toggle switches are used to enable specific system ports either manually or under program control. The three positions operate as follows:

- o ENABLE - The port is enabled and able to communicate with an active module.
- o ORIG COUNT (program control) - The port is under program control and will be turned on or off by the proper bit in the program - controlled mask register. This is used for modules that only need to access memory occasionally.
- o DISABLED - The port is turned off.

There is a green indicator associated with each PORT ENABLE switch. The indicator will be on whenever a port is enabled.

IOMs and processors are the only active modules that you need to be concerned with as being connected to the SCU. It is through SCU ports that these modules can access memory. The ports have access to memory on a priority basis. PORT-0 has the highest priority and PORT-7 the lowest priority. Therefore, if a module on PORT-7 is accessing memory and a module on PORT-Ø needs to access memory, the module on PORT-7 will be interrupted to allow the module on PORT-Ø to access memory.

Since, as far as accessing time is concerned, the processor is faster, the IOMs are on the higher priority ports than the processor. The processor normally goes into memory for short periods of time to fetch or store data or instructions. The IOM, on the other hand, takes longer when getting to and out of memory. If the IOM was on a lower priority port, say PORT-7, and the processor on a higher priority port (PORT-Ø), the only time the IOM could get into memory to furnish the processor with data to work on would be when the processor came to a complete halt. The speed of processing data is lost. Normally, if a system has one IOM and one processor, the IOM would be interfaced through PORT-Ø and the processor through PORT-7.

The seven CYCLIC PRIORITY toggle switches are used to group like active modules to assure equal access to memory on the same system controller. Turning the switches on (up) causes system ports to be linked so as to form groups. If a system has two IOMs, you would like the access time for both IOMs to be equal so that one does not have a higher priority than the other. The same would be true for a multiprocessor system. The only time when this cyclic priority scheme would be circumvented is when interrupts would have to be serviced. Only the control processor in a multiprocessor system will service interrupts.

The ALARM DISABLE switch disables the alarm bell when in the ON position. The TEST/NORMAL switch controls the operation of the maintenance panel. In the NORMAL position, the maintenance panel is disabled and the unit is online. The TEST position enables the panel and turns the MAINT PNL ENABLED indicator on.

INPUT-OUTPUT MULTIPLEXER

The input-output multiplexer (IOM) configuration panel contains the following switches:

- PORT ASSIGNMENT
- INTERLACE
- PORT ENABLE
- SYSTEM INITIALIZE ENABLE

  — for each port

- STORE SIZE
- IOM BASE ADDRESS
- PROGRAM INTERRUPT BASE
- IOM NUMBER
- BOOTLOAD SOURCE
- TAPE CHANNEL NUMBER
- CARD CHANNEL NUMBER
- BOOTLOAD PORT
- SYSTEM INITIALIZE
- BOOTLOAD
- ALARM DISABLE
- TEST/NORMAL

The INTERLACE toggle switch allows interleaving of memory addresses by two ports. For the interleave mode of operation, two ports must be enabled and both ports must use the same size memory. PORT ASSIGNMENT switch 2 for the ports must be set opposite, and PORT ASSIGNMENT switches Ø and 1 must be set the same.

To interleave PORTS-A and -B with 32K of memory each, the switches should be set as follows:

- o INTERLACE - both on
- o PORT ASSIGNMENT -

	Ø	1	2
PORT-A	Ø	1	1
PORT-B	Ø	1	Ø

- o STORE SIZE - both 32K
- o PORT ENABLE - both on

Bear in mind that you are interleaving more than one SCU. Even though you may interlace the two STORE units on SCUs, you can only interlace SCUs which have the same amount of core. If you have two SCUs, one with 128K and one with 64K, you can't interlace even though the one SCU with 128K may have 64K in one store and 64K in another.

When interlacing, the two ports must be adjacent and you can only interleave two ports. If a system existed that had four SCUs with 128K on each SCU (PORTS A, B, C, and D, respectively), you could interleave either PORTS A and B, B and C, or C and D.

The PORT ENABLE toggle switch logically connects the port to the system controlled, thus turning the port on.

The SYSTEM INITIALIZE ENABLE toggle switch is turned on to allow initialization of the IOM by a signal from the system controller to the port. When in the OFF position, the PORT INITIALIZE signal is inhibited.

The BOOTLOAD SOURCE toggle switch, in conjunction with the CHANNEL NUMBER toggle switches, selects the source of the bootload and defines the channel number of the tape handler or card reader that contains the bootload instructions. Bits CN5 to CNØ carry the successive powers of 2 (2^{0}, 2^{1}, 2^{2}, 2^{3}, 2^{4}, 2^{5}). The number 15 would be represented with CN5, CN4, CN3, CN2 on (up).

The BOOTLOAD PORT toggle switch defines the port number (if two IOMs, the IOM on the highest priority port is selected) of the system controller through which connects are sent to the IOM. In other words, this is how the booting instructions coming from a card reader or tape handler can get into memory so that the processor can execute the instructions. The bits Ø, 1, and 2 carry the value of 4, 2, 1 (Binary Coded Octal). If the IOM is on PORT-Ø of the SCU, then all bits are off or down. If it is on PORT-1, then bit 2 is on.

The ALARM DISABLE and TEST/NORMAL have the same functions as on the SCU.

The 12 IOM BASE ADDRESS toggle switches are used to set the base address for the IOM. The IOM base address tells software where certain control words are located in memory. The IOM base address is an 18-bit word, but only bits Ø through 11 are set by the IOM BASE ADDRESS switches (see figure 3-7); bits 12 through 17 are Ø's.

IOM - MEMORY ADDRESS PORT ASSIGNMENT TABLE

ASSIGNMENT	ADDRESS RANGE	STORE SIZE(K)	CORE ADDRESSED
Ø 1 2		PATCH PLUG	
Ø Ø Ø	Full	32	Ø-32
		64	Ø-64
		96 and 96/64	Ø-96
		128	Ø-128
		256	Ø-256
		512	Ø-512
		1Ø24	Ø-1Ø24
		2Ø48	Ø-2Ø48
Ø Ø Ø	Half	32	Fault
		64	Ø-32
		96 and 96/64	Fault
		128	Ø-64
		256	Ø-128
		512	Ø-256
		1Ø24	Ø-512
		2Ø48	Ø-1Ø24
Ø Ø 1	Full	32	32-64
		64	64-128
		96	96-192
		96/64	96-160
		128	128-256
		256	256-512
		512	512-1Ø24
		1Ø24	1Ø24-2Ø48
		2Ø48	2Ø48-4Ø96
Ø Ø 1	Half	32	Fault
		64	64-96
		96	Fault
		96/64	Fault
		128	128-192
		256	256-384
		512	512-768
		1Ø24	1Ø24-1536
		2Ø48	2Ø48-3Ø72
Ø 1 Ø	Full	32	64-96
		64	128-192
		128	256-384
		256	512-768
		512	1Ø24-1536
		1Ø24	2Ø48-3Ø72
		2Ø48	4Ø96-6144

IOM - MEMORY ADDRESS PORT ASSIGNMENT TABLE

ASSIGNMENT	ADDRESS RANGE	STORE SIZE(K)	CORE ADDRESSED
Ø 1 2		PATCH PLUG	
Ø 1 Ø	Half	32	Fault
		64	128-160
		128	256-320
		256	512-640
		512	1024-1280
		1024	2048-2560
		2048	4096-5120
Ø 1 1	Full	32	96-128
		64	192-256
		128	384-512
		256	768-1024
		512	1536-2048
		1024	3072-4096
		2048	6144-8192
Ø 1 1	Half	32	Fault
		64	192-224
		128	384-448
		256	768-896
		512	1536-1792
		1024	3072-3584
		2048	6144-7168
1 Ø Ø	Full	32	128-160
		64	256-320
		128	512-640
		256	1024-1280
		512	2048-2560
		1024	4096-5120
		2048	8192-10240
1 Ø Ø	Half	32	Fault
		64	256-288
		128	512-576
		256	1024-1152
		512	2048-2304
		1024	4096-4608
		2048	8192-9216

IOM - MEMORY ADDRESS PORT ASSIGNMENT TABLE

ASSIGNMENT	ADDRESS RANGE	STORE SIZE(K)	CORE ADDRESSED
Ø 1 2		PATCH PLUG	
1 Ø 1	Full	32	160-192
		64	320-384
		128	640-768
		256	1280-1536
		512	2560-3072
		1024	5120-6144
		2048	10240-12288
1 Ø 1	Half	32	Fault
		64	320-352
		128	640-704
		256	1280-1408
		512	2560-2816
		1024	5120-5632
		2048	10240-11264
1 1 Ø	Full	32	192-224
		64	384-448
		128	768-896
		256	1536-1792
		512	3072-3584
		1024	6144-7168
		2048	12288-14336
1 1 Ø	Half	32	Fault
		64	384-416
		128	768-832
		256	1536-1664
		512	3072-3328
		1024	6144-6656
		2048	12288-13312
1 1 1	Full	32	224-256
		64	448-512
		128	896-1024
		256	1792-2048
		512	3584-4096
		1024	7168-8192
		2048	14336-16384

IOM - MEMORY ADDRESS PORT ASSIGNMENT TABLE

ASSIGNMENT	ADDRESS RANGE	STORE SIZE(K)	CORE ADDRESSED
Ø 1 2		PATCH PLUG	
1 1 1	Half	32	Fault
		64	448-48Ø
		128	896-96Ø
		256	1792-192Ø
		512	3584-384Ø
		1Ø24	7168-768Ø
		2Ø48	14336-1536Ø

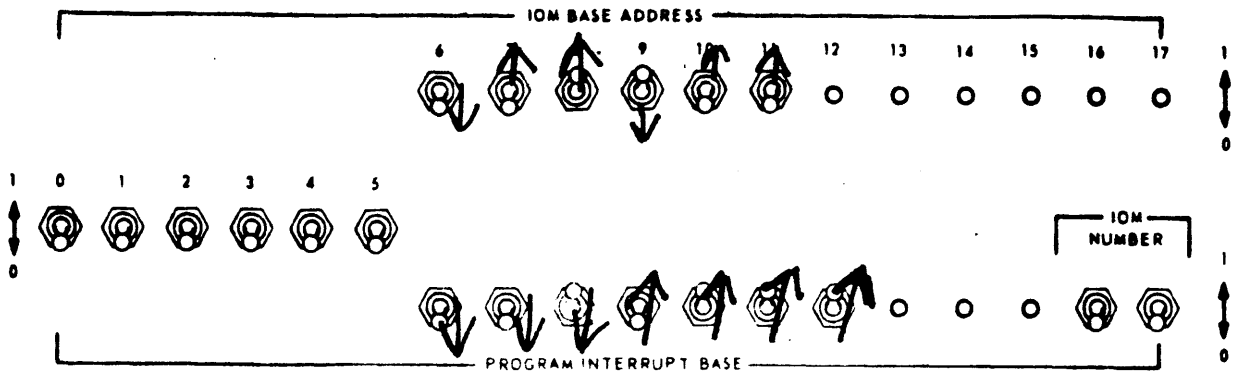

PROGRAM INTERRUPT BASE

Figure 3-7. Address Switches

The IOM BASE ADDRESS for the first or only IOM is 3000_8. Dividing bits Ø-17 into groups of three, they will assume the value of the Binary Coded Octal (4, 2, 1), so that bits 8 and 9 will be on (up) to indicate 3000_8 (see figure 3-7).

For each additional IOM, the IOM BASE ADDRESS will be 1400_8 positions higher in memory than the last IOM. If the BASE ADDRESS of the first IOM (IOM-Ø) is 3000_8, then the BASE ADDRESS for the second IOM (IOM-1) is 4400_8 and bits 7 and 10 will be on. In other words, each IOM needs 1400 octal positions in memory for its own control words.

The 15 PROGRAM INTERRUPT BASE toggle switches allow the operator to set up a BASE ADDRESS for program interrupts, or Interrupt Multiplier Words (IMWs). This permits GCOS to locate and identify program interrupts and determines what action must be taken to satisfy the interrupt.

Bits Ø through 5 are shared with the IOM BASE ADDRESS, bits 13 through 15 (interrupt level) come from the channel, and bits 16 and 17 identify the system number of the IOM (figure 3-7 is for IOM-Ø, bits 16 and 17 off). The PROGRAM INTERRUPT BASE ADDRESS for each IOM is 740_8 or bits 8, 10, 11, and 12 on (see figure 3-7).

The SYSTEM INITIALIZE pushbutton is used to send a SYSTEM INITIALIZE signal to the system controller. The system controller then sends an INITIALIZE signal to all enabled ports that have their SYSTEM INITIALIZE ENABLE switches turned on.

The BOOTLOAD pushbutton is used to initiate the bootload sequence. It causes the reading of the first card if booting from cards or the first record if booting from tape.

DATANET 355 FRONT-END NETWORK PROCESSOR

The DN355 Direct Interface Adapter (DIA) panel switches are set and never changed by the operator. We teach you how they should be initially set. The only switch you really need to know about is the 355 MAILBOX ADDRESS.

The switches for the DIA panel are set as follows.

CENTRAL SYSTEM CONFIGURATION

1. ALL UPPER ADDRESS BOUNDS should be set to a value of 7.

2. ALL LOWER ADDRESS BOUNDS should be set to a value of Ø.

3. The PCW MAILBOX ADDRESS should be set 1ØØØ octal past the last IOM BASE ADDRESS for 355-Ø; each 355 uses 1ØØ octal positions. Therefore, 355-1 would be calculated by adding 1ØØ octal to 355-Ø.

4. The switches labeled ADDRESS BOUNDS and TIMER will be set to the OFF position for normal operation.

5. The WRITE ENABLE should be set to ON for normal operation.

6. The BOOT ENABLE must be set to the ON position.

7. The TERMINATE and EMERGENCY INTERRUPT LEVEL switches will be set to a value of 7.

355 COMPUTER

1. The PCW MAILBOX switches must be set to a value which is a multiple of four. For most sites, 454 octal is recommended.

2. The CHANNEL NO switches must be set to a channel number which is not already assigned, usually 4.

3. The SPECIAL INTERRUPT LEVEL switches must be set to a value of 3 octal.

4. The TERMINATE INTERRUPT LEVEL switches must be set to a value of 2 octal.

CP6000 Processor

The CP6000 processor configuration panel contains the following switches:

- o PORT ASSIGNMENT
- o INTERLACE
- o PORT ENABLE
- o INITIALIZE ENABLE
- o STORE SIZE
- o PROC NUMBER
- o INITIALIZE & CLEAR
- o ALARM DISABLE
- o MAINTENANCE PANEL MODE
- o SYSTEM CONTROL AND MONITOR
- o SYSTEM BOOT CONTROL

NOT COVERED

STORE SIZE, PORT ASSIGNMENT, INTERLACE, PORT ENABLE, INITIALIZE ENABLE, ALARM DISABLE, AND MAINTENANCE PANEL MODE function the same on the processor as they do in the IOM. If they are both on the same system, they should also be set the same in order to have the same outlook on memory.

The PROC NUMBER toggle switches designate the processor assignment number in multiprocessor systems. (For PRO-0, both switches are down to indicate 0.)

The INITIALIZE & CLEAR pushbutton causes all control flip-flops and data registers in the processor to be reset to a known INITIALIZE state. This pushbutton has the same effect on the processor as an INITIALIZE signal through an enabled system port.

STARTUP PROGRAM

Startup Operation

Running as a miniature operating system, the startup program package performs the following functions:

- o Initializes all file system devices.
- o Edits various files into the file system, so that a copy of the system and its associated files may be called into core storage.
- o Serves as a system loader generating the tables of module and file locations required by the system.
- o Constructs the hard-core modules and turns control over to GCOS.

The general flow of startup operation is as follows:

1. The operator manually configures and initializes the system.
2. The bootload section of the startup deck reads the cards in the startup deck and loads the startup program into core storage.
3. The system description card processor reads the system description and control cards, builds the system description tables, sets up the I/O parameters for startup, and does any editing requested.
4. The module-loading processor loads permanent modules from system storage and initializes them, builds the module definition and name tables, and makes additional initialization entries as requested by the modules.
5. The final phase of the startup operation moves the module definition and name tables to the communication region; moves interrupt vectors, fault vectors, IOM mailboxes, etc., to their proper locations; and transfers control to the dispatcher module.

MAINFRAME RECONFIGURATION AND TESTING TECHNIQUES

Mainframe components include the processor, memory, System Control Unit (SCU), and Input/Output Multiplexer (IOM). While each component has individual responsibilities, there is constant interaction among the four. Therefore, a problem in any one of the components can cause symptoms to occur in one or more other components.

Because these components are heavily utilized by GCOS and are critical to system operations, this section concentrates on mainframe availability. Among the subjects discussed are testing, release and assignment, and crossbarring of mainframe components. In addition, the technique of splitting a redundant system is described.

DYNAMIC RELEASE AND ASSIGNMENT

Dynamic release and assignment of mainframe components can help avoid the necessity to shut down the system for the purpose of adding components to or deleting components from the system configuration. In addition, components can be released and assigned via changes to the Startup deck.

It is recommended, however, that mainframe components not be indiscriminantly released and assigned - especially released - without the benefit of test results from the Mainframe Online Test Subsystem (MOLTS). This subsystem is a subset of the Total Online Test System (TOLTS). Unlike release of most peripheral devices, loss of a mainframe component from the system configuration can have a significant impact on overall system performance. (Refer to Section V of the Total Online Test System (TOLTS) Reference Manual for information of MOLTS tests.)

The following console entries release and assign the indicated mainframe components.

Console Entries	Component Affected
RLSEC, ASGNC	Memory
RLSEI, ASGNI	IOM
RLSEP, ASGNP	Processor

The SCU component cannot be dynamically released or assigned via console entries, but can be released/assigned - as can each of the other mainframe components - by deconfiguring/reconfiguring the SCU in the Startup deck and changing switch settings.

Processor Release and Assignment

Processors can be released for offline testing by the site's Field Engineering Division (FED) representative and then reassigned to the configuration after testing and maintenance are completed. Processors also can remain on line and be available only to TOLTS for online tests.

PROCESSOR RELEASE

Any configured processor (in a multiprocessor environment) can be released via the RLSEP p console entry (when p = number of the system controller to which the processor is assigned). When releasing a processor:

1. The processor must be defined on a $ MCT card in the $CONFIG section of the Startup deck. (All physical processor numbers must be defined via a $ MCT card. Only logical processor Ø must be defined to specify the physical processor that is the control processor.)

2. The processor number that is defined on the $ MCT card must be set in the PROC NUMBER switches on each processor's configuration panel. This number is the physical configuration number of the processor and is not changed in any of the reconfiguration procedures.

   In a six-processor configuration, the fifth and sixth processors cannot be defined via PROC NUMBER switches (i.e., the switch settings do not accommodate these processor numbers). Therefore, neither of these processors can become the control processor in the preceding manner.

   If either the fifth or sixth processor must become the control processor, the $ MCT card must be modified so that the processor in question can be assigned a compatible processor number (i.e., Ø-3). The PROC NUMBER switch settings also must be modified to reflect the change and the system must be rebooted.

3. With the exception of the control processor (logical processor Ø), any processor can be released during the bootload sequence if one processor does not respond to a Startup query during the rollcall function. The operator can respond YES to the resulting console message "PROCESSOR ON PORT p DOESN'T ANSWER CONNECT, YES TO CONTINUE to release the processor and continue the bootload. (Refer to Section III of the System Startup manual for additional information.)

4. The /OFF option on the $ MCT card permits definition of a processor - other than logical processor Ø - that is not currently configured, but which will be configured (activated) in the future. (Addition of a processor to the system configuration otherwise is not permitted when restarting.) The processor can be activated during a subsequent bootload by removing the /OFF option from the $ MCT card. (Refer to Section IV of the System Startup manual for a description of this option.)

At least one processor must always be configured. In a multiprocessor configuration, both processors stop when control functions are exchanged. However, this is only a temporary idle condition to accommodate the exchange of functions.

When the specified processor stops, an instruction that begins and ends with 7's (e.g., 70000q616007) is displayed on the processor's maintenance display and control panel. This indicates that the processor is ready to be switched off the system. If the processor being released is a slave processor (i.e., not the control processor), the value of q in the instruction is Ø (zero). No manual intervention is required for a noncontrol processor unless the processor is to be switched off line. If the noncontrol processor is switched off line, the PORT ENABLE and the INITIALIZE ENABLE switches on the processor configuration panel for the system controller port must be set to OFF.

If the control processor is to be released, a slave processor must assume the control processor functions. When the control processor is released (via an RLSEP console entry), the value of q in the instruction displayed is the number of a system controller port to which this slave processor is assigned. The slave processor that is to assume the control functions stops and the instruction 00000q616007 displays on its maintenance display and control panel(where q = port number for this slave processor).

When both processors are stopped and displaying the instruction described in the preceding paragraph, the new control processor (i.e., the slave processor that has assumed the control functions) can be started.

If the released processor is to be used off line or is to be switched to another system, it must be masked by setting to OFF its PORT ENABLE and INITIALIZE ENABLE switches for the system controller port.

A processor release request (RLSEP p or RLSEP p TEST) is ingored under the following conditions.

1. The request contained an invalid port number (i.e., not Ø-7).

2. The processor is marked "do not release" (bit 2 =1 in .CRCMC).

3. A processor is being released.

4. Only one processor is configured in the system.

PROCESSOR RELEASE FOR ONLINE TESTS

The System Online Test Subsystem (SOLTS), which is a subset of TOLTS, tests both Extended Instruction Set (EIS) and non-EIS processors. These processors also are tested by the Processor Automatic Confidence Test (PACT) program, which is a subset of POLTS.

SOLTS Testing

Processor testing via SOLTS is accomplished by releasing the processor to the test program via the console entry RLSEP p test. (Refer to Section VII of the Total Online Test System (TOLTS) Reference Manual for additional information of the SOLTS program.)

If a slave processor is being released for testing, no manual intervention (switch setting) is required. The processor is ready for the test program (SOLTS) as soon as the processor stops.

If a control processor is being released for testing, a slave processor must assume the control functions (i.e., become the new control processor). When the control processor (on system controller port p) stops in response to the RLSEP p TEST verb, the instruction *ØØØØØq616ØØ7* is displayed on its maintenance display and control panel. The value q is the number of the system controller port for the slave processor that is to take over the control functions. This slave processor stops with the same instruction displayed on its maintenance display and control panel.

Use the following procedure to start the processor on port q (the new control processor).

1. Press the EXECUTE CONTROL push button one time on the processor's maintenance display and control panel.

The released processor now is ready for the start of the processor test.

When the processor online test is completed, that processor is placed off line via the RLSEP q console entry.

PACT Testing

Processor testing via PACT is recommended whenever site personnel becomes suspicious of processor operations. A schedule can be established for running processor tests and the operator can specify one-time execution of PACT, continuous execution of PACT, or execution of PACT on a frequency basis. Variations of the console entry ELAN SLTA provide this flexibility. (Refer to Section VIII of the Total Online Test System (TOLTS) Reference Manual for additional information.)

PROCESSOR ASSIGNMENT

A configured processor can be reinstated to the system configuration via the console entry ASGNP p (where p = number of the system controller port to which this processor is assigned).

No resetting of switches is required when the processor being restored to the system is on line and is a slave processor.

If the processor being reinstated to the system configuration is off line, the following procedure must be performed before the ASGNP request is made and after the power has been turned on.

1. Press the INITIALIZE AND CLEAR push button on the configuration panel of the processor being reinstated.

2. Set to ON the PORT ENABLE and INITIALIZE ENABLE

When a released control processor is assigned to the system, its control functions are not restored. When assigned, the processor runs as a slave processor and assignment is as described in the preceding paragraphs.

A processor assignment request (ASGNP p or ASGNP p TEST) is ignored under the following conditions.

1. The request contained an invalid port number (i.e., Ø-7).

2. The processor is marked "do not assign" (bit 1 =1 in .CRCMC).

3. The /OFF option on the $ SCU card in the Startup deck applies to the processor.

4. A processor is being released.

PROCESSOR ASSIGNMENT FOR TESTING

A processor that is configured, but is off line, can be placed on line for testing via the console entry ASGNP p TEST (where p = number of the system controller port to which this processor is assigned).

Perform the following procedure at the configuration panel of the processor being placed on line before the ASGNP request is made and after the processor power is on.

1. Press the INITIALIZE AND CLEAR push button.

2. Set to ON the PORT ENABLE and INITIALIZE ENABLE switches for the system controller port.

Following the ASGNP p TEST entry, dispatches to this processor are restricted to Test and Diagnostics (T and D) programs for the processor. When the online test is completed, the processor can be restored to normal operation via the console entry ASGNP p or can be released for additional maintenance via the console entry RLSEP p.

CACHE MEMORY CONTROL ON PROCESSOR RECONFIGURATION

If the Error Logging and Analoysis (ELAN) recognizes that processor reconfiguration is in process, HEALS bypasses its normal cache control activities. After processor reconfiguration is complete, ELAN initializes the cache memory control function and resumes activity.

IOM RELEASE AND ASSIGNMENT

There are no specific online tests for the IOM. This component is adequately tested by GCOS during normal processing events and when other components are tested. In addition, definitive offline tests are available for the site's FED representative to perform on the IOM. The following defines release of an IOM for offline testing and reassignment of the IOM to the system configuration following testing and maintenance.

IOM reconfiguration must be exercised with care to prevent degradation of system performance. Consider the following before attempting reconfiguration.

1. When the IOM on which the system console is configured is released, operator-system communications are removed. Therefore, before deconfiguring this IOM, console names must be moved to a console on another IOM via the console entry MOVE xxx iccdd (where xxx = logical device name to be moved and iccdd = IOM, channel, and device numbers to which device xxx is to be moved).

2. If a printer allocated to a job is on an IOM that is deconfigured, the job halts until that IOM is restored to the system. The I/O is queued, but not issued. Thus, all devices that are not crossbarred must be de-allocated before the IOM they are connected to is deconfigured.

3. Any reconfiguration reflected on the $ IOM card (including IOM reconfiguration) invalidates a YES response to the Startup question *RESTART?.

4. An IOM can be released at the time the system shuts down (either a normal shutdown or a system abort). On a system restart without reconfiguration (i.e., a warm bootload or an automatic restart), the IOM released in the previous run is restarted. If that IOM is to remain released (e.g., for maintenance), the system must be restarted with that IOM removed from the con-figuration.

IOM RELEASE

An IOM can be released from the system via the console entry RLSEI m (where m = number (Ø-3) of the IOM to be released).

Before using this entry, the operator must:

1. Move any logical console functions from the IOM being released to an IOM that is remaining in the system.

2. Release or move any unit record devices assigned to an executing program from the IOM being released to an IOM that is remaining in the system.

3. Move any functions for printer PR1 from the IOM being released to an IOM that is remaining in the system.

   NOTE: These are logical functions and do not involve changing hardware switch settings or cable movement. Unit record changes probably will be effected via the RLSE or EXCHG entries and the console moves will be made via the MOVE entry.

4. Use a TCALL console entry to disconnect all Front-End Network Processors configured on the IOM being released.

This procedure prepares the IOM for release. It is assumed that disk and tape channels are crossbarred across IOM's so that when one IOM is deconfigured, all I/O is automatically diverted to another IOM.

When the console entry RLSEI m is made, system software validates the IOM number and ensures that at least two IOM's are configured. An error in the IOM identification results in the console message CAN't RLSET m -- DOES NOT EXIST, which indicates that the request was not executed.

If the console entry is executed, GCOS deactivates each channel on the specified IOM and marks the tables to indicate the inactive condition. Each channel then is scanned to ensure that it is not busy. If a channel is busy, the scan is interrupted long enough for that I/O to complete. The scan then is continued until all channels on the IOM have been checked.

At the completion of the scan for busy channels, the console message "IOM m IS RELEASED is issued to indicate that the scan is completed.

If the release request cannot be executed, one of the following console messages is used.

Message	Description
CAN'T RLSEI m -- SINGLE IOM	Only one IOM is configured.
CAN'T RLSEI m - DOES NOT EXIST	The specified IOM is not configured in the system.
CAN'T RLSEI m -- INVALID INPUT	The release request contained an error (e.g., incorrect format).

IOM ASSIGNMENT

A released IOM, which was configured at system startup, can be restored to the system via the console entry ASGNI m (where m = number (Ø-3) of the IOM to be assigned to the system).

No preparation is required for the assignment of an IOM. When the request is executed, GCOS verifies that the number describes an existing IOM. An error in the request format causes issuance of a console message, which informs the operator that the request was not executed.

When the ASGNI entry is accepted, GCOS activates each channel on the IOM by resetting bits in the IOM's tables.

The I/O queue for each channel then is scanned to determine whether I/O can be initiated on the newly activated channel. After all IOM channels have been scanned, the console message "IOM m IS ASSIGNED is issued to indicate that assignment is complete.

If the assignment request cannot be executed, one of the following messages is issued to the console.

Message	Description
CAN'T ASGNI m -- DOES NOT EXIST	The IOM specified in the request is not configured.
CAN't ASGNI m -- INPUT INVALID	The assign request contained an error (e.g., incorrect format).

The ASGNI entry normally is used in conjunction with an RLSEI entry. However, if IOM assignment is attempted when all configured IOM's are operating, the ASGNI entry is executed with no adverse results.

Memory Release and Assignment

Memory is released to MOLTS via the console entry RLSEC gaaa bbbb (where q = memory quadrant in which release is to occur; aaa = address in the memory quadrant at which release begins; and, bbbb = number of 512-word blocks to be released). Memory is reassigned from MOLTS to GCOS via the console entry ASGNC gaaa bbbb.

MOLTS memory tests concentrate on memory parity errors, addressing errors, and incorrect bit patterns that are not detected by parity-checking functions. Each of these represents a serious hardware problem. When a memory parity error causes a slave abort, MOLTS is automatically called to perform a test against the affected area in memory.

Whenever a memory parity occurs, the operator should note the event in the appropriate log and bring the error to the attention of site techniques personnel. The console message MEM PARITY nnnnnn is issued (where nnnnnn = location in memory of the parity error). These errors also are recorded on the Statistical Collection File (SCF), which can be printed for analysis via the Summary Edit Program. (Refer to Sections III and IV of the Summary Edit Program manual for additional information.)

Note that when an area in memory is withdrawn from allocation, it is the operator's responsibility to reassign that memory to GCOS via the ASGNC gaaa bbbb console entry. One exception to this is that memory is automatically reassigned whenever the system is bootloaded.

The operator is informed of memory release only once via the console message ***MEM RLSE F6ABRT xxxxxx LOCATIONS STARTING AT yyyyyy (where xxxxxx = number of memory locations released and yyyyyy = address of first memory location released). Because withdrawal of memory can severely affect processing efficiency, it is recommended that the operator frequently inspect the console log for memory-released messages. However, if a long period of time passes before console log inspection occurs, the ASGNC LIST console entry can be used to determine if memory has been released.

SCU Release and Assignment

As with the IOM, there are no specific online tests for the SCU. This component is adequately tested by GCOS during normal processing events and other components are tested. In addition, definitive offline tests are available for the site's FED representative to perform on the SCU.

SPLITTING AND MERGING REDUNDANT SYSTEMS

In addition to their application in response to component failure, reconfiguration techniques can be employed to logically divide a redundant system (i.e., a system in which all components - including mainframe modules - are physically and/or logically duplicated).

A redundant system normally is split when the site's FED representative requires a complete system to perform preventative maintenance or offline tests. Splitting the system allows the site to continue production processing on the remaining (primary) system while offline tests are conducted on the secondary system.

In addition, some sites have reasons other than those stemming from component failure - these reasons usually are unique to each site - for splitting a redundant system. For example, one system may be required to complete a special project (i.e., testing of new programs could interrupt normal processing). By splitting the redundant system, one of the resulting systems effectively can be dedicated to that project.

Splitting and merging a system combines the use of the RLSE and ASGN console entries, Startup deck modification, and changes to mainframe component switch settings.

While some variations in the following procedure may successfully split and merge a system, it is recommended that the procedure be strictly followed to ensure success.

SPLITTING SYSTEM

There are four separate functions in the procedure to split a redundant system. These functions include Startup deck considerations, console activity preparatory to releasing components, release of components to the secondary system, and bootloading the secondary system.

STARTUP DECK CONSIDERATIONS

System parameters must be established at system startup as a prerequisite to splitting a redundant system. The following considerations must be taken into account when preparing the Startup deck.

1. Mainframe components, which are to be released for the purpose of configuring a secondary system, must be the high-order components. The following example indicates this relationship.

Primary System	Secondary System
IOM-Ø	IOM-1
Processor-Ø	Processor-2
SCU-Ø	SCU-1
Ø-256K	Above 256K

2. System control units (SCU's) must be independently configured as free-standing components. This allows each SCU to control memory for the system on which the SCU is configured.

CONSOLE ACTIVITY

After bootloading the system and before releasing any components to the secondary system, it is recommended that the operator determine memory status.

- In response to the console entry PEEK CORE, a console message is issued identifying the amount of memory currently configured on the entire system.

- In response to the console entry LSTCR, a console message is issued identifying all programs that reside in memory. (This information includes identification of programs that reside in memory that is configured above 256K.)

Program residency above 256K does not prevent release of that memory to the secondary system. However, if programs residing in the portion of memory that is released to the secondary system are called, response time may be somewhat slower than that of programs residing in memory below 256K. By knowing in advance that specific programs reside in memory that is released to the secondary system, the operator need not consider the slower response time an error condition.

After using the PEEK CORE and LSTCR console entries, it is recommended that the operator abort the ELAN program via the console entry ABORT ELAN. If ELAN is allowed to remain active, it has no means of skipping a block of memory that is released to the secondary system. As a result, the system may abort.

Aborting ELAN does not deactivate cache memory.

RELEASE COMPONENTS TO SECONDARY SYSTEM

As previously indicated, there may be alternatives to the following sequence of releasing components from the primary system to the secondary system. However, it is recommended that the following procedure be used to avoid problems.

It is extremely important to the success of splitting the system that switches be set in the proper sequence. Any error during this procedure aborts the primary system.

Use the following procedure to release components from the primary system to the secondary system.

1. Release all peripherals, which are configured on the IOM that is to be released, via successive RLSE iccdd console entries (where i = IOM number, cc = channel number, and dd = device number). This procedure includes releasing IOM's.

   If the logical console names TY1-TY4 are associated with the IOM that is being released, use the console entry MOVE nnn iccdd to move the name to an IOM that is being retained on the primary system (where nnn = logical device name, i = IOM number, cc = channel number, and dd = device number).

2. Release the IOM on which released peripherals were configured via the console entry RLSEI m (where m = number (Ø-3) of the IOM). This entry releases all channels on the IOM.

3. Release the desired amount of memory that is configured above 256K via the console entry RLSEC qaaa bbbb (where q = memory quadrant in which release is to occur; aaa = address in the memory quadrant at which release begins; and, bbbb = number of 512-word blocks to be released).

4. Enter LSTCR via the console to verify that the desired amount of memory was released to the secondary system via the RLSEC console entry. A console message is issued to identify both the amount of memory remaining on the primary system and the amount of memory released to the secondary system.

5. Release the processor via the console entry RLSEP p (where p = the SCU port on the primary system to which this processor is assigned). For example, RLSEP 2 indicates that the released processor is assigned to SCU port 2 and not that processor 2 is to be released.

6. Set switches on the primary and secondary system mainframe components. However, prior to setting the switches, make a written notation of their current settings. This information is needed when the two systems subsequently are merged.

It is important that the switches be set in the following sequence. Any error in the sequence may abort the primary system.

a. Turn off the PORT ENABLE and INITIALIZE ENABLE switches on the primary system that refer to components that are being released to the secondary system. This severs the relationship between the primary and secondary systems.

b. Turn off the PORT ENABLE and INITIALIZE ENABLE switches on the secondary system that reference the primary system.

c. Set the CPU switches on the secondary system.

d. Set the IOM switches on the secondary system.

e. Set the SCU switches on the secondary system.

BOOTLOAD SECONDARY SYSTEM

The configuration of the secondary system must be reflected in a separate Startup deck. Define all secondary system components on $ IOM cards within this deck.

With one exception, normal bootload procedures apply. However, do not bootload an MPC that is shared with the primary system. Bootloading a shared MPC aborts the primary system. To help prevent this condition, include the SDB option on the $ MPC card. This option prevents Startup from bootloading the MPC each time the firmware is bootloaded.

Do not modify the Startup deck for the primary system. This deck reflects the total system (including the released components).

After bootloading the secondary system, reactivate the ELAN program via the SPAWN ELAN console entry.

PRIMARY AND SECONDARY SYSTEM ABORTS

If the primary system aborts or is rebooted for any reason, the operator must merge the primary and secondary systems using the procedure defined under "Merging Systems". Then, return to step 1 of "Release Components to Secondary System" and again release the required components and reset all switches.

Note that whenever the system is bootloaded, all released memory is reassigned to the primary system.

If the secondary system aborts after a redundant system is split, bootload the system following normal restart procedures. (Refer to Section II of the System Startup manual for bootload procedures.)

SPLITTING SYSTEM INTO SHARED SYSTEMS

A large system with some component redundancies (e.g., two or more processors) can be split into two individual systems that share some common components (e.g., disk drives). It is a prerequisite to performing this type of system division that the original (primary) Startup deck reflect the resulting shared environment.

After releasing components from the primary system to the secondary system, bootload the secondary system using a Startup deck for that system. This deck also must reflect the shared configuration.

All system startup considerations for shared systems must be taken into account when creating the two Startup decks and when bootloading the two systems. (Refer to Section V of the System Startup manual for information on these considerations.)

Merging Systems

In many respects, the procedure to merge independent systems into one system is the reverse sequence of splitting a redundant system. However, there are some differences in the two procedures. The following procedure merges two independent systems into one system.

1. Abort the secondary system (e.g., enter BOOT or DUMP via the system console). This allows all released components to be reassigned to the primary system.

2. Press the INITIALIZE push button on the system console to ignore any I/O activity that is requested or is queued for processing.

3. Use the notations made in step 6 of "Release Components to Secondary System" to return secondary system mainframe component switches to their proper settings.

   a. Reset the SCU switches on the secondary system.

   b. Reset the IOM switches on the secondary system.

   c. Reset the CPU switches on the secondary system.

   d. Turn on all PORT ENABLE and INITIALIZE ENABLE switches on the secondary system.

   e. Turn on all PORT ENABLE and INITIALIZE ENABLE switches on the primary system.

4. Press the INITIALIZE CLEAR push button on the secondary system's SCU.

5. Press the INITIALIZE push button on the secondary system's processor. (Do not press the INITIALIZE push button on the IOM. Pressing this push button aborts the primary system.)

6. Reassign the secondary system's processor via the console entry ASGNP p (where p = the SCU port on the primary system to which the processor is assigned).

7. Reassign the secondary system's memory via the console entry ASGNC gaaa bbbb (where q = memory quadrant in which reassignment is to occur; aaa = address in the memory quadrant in which reassignment begins; and, bbbb = number of 512-word blocks to be reassigned).

8. Reassign the secondary system's IOM via the console entry ASGNI m (where m = number (Ø-3) of the IOM).

9. Reassign all secondary system peripherals via successive ASGN iccdd console entries (where i = IOM number, cc = channel number, and dd = device number).

1Ø. Enter LSTCR via the console to verify that all released memory was reassigned to the primary system from the secondary system.

    If the resulting console message indicates that all memory was not reassigned, (1) enter RLSEC gaaa bbbb to release the memory again (as in step 3 of "Release Components to Secondary System"); (2) call the site's FED representative to clear (zero fill) memory; and, (3) reassign the memory via the ASGNC gaaa bbbb console entry.

COMPONENT CROSSBARRING

Effective use of component redundancy allows the site to employ the crossbarring technique. This feature greatly improves the chances for optimum system availability and, at the same time, reduces the necessity to reconfigure because of component failure.

Crossbarring is the physical and logical connecting of system components so that data can flow across channels and through the system even though one or more components become inoperable. A channel is a data path between the peripheral device and the processor. Crossbarring configures data channels such that two distinct pathways are achieved. These pathways allow system software to route data along whichever channel is available without requiring reconfiguration of system components. For example, if one channel is busy, the alternate channel can be used.

Crossbarring has hardware (i.e., physical and software (i.e., logical) implications. Both physical and logical conditions must be satisfied to effect crossbarring. If either is omitted, components are not crossbarred.

1. Hardware considerations center on the physical interconnection (i.e., cabling) of components.

2. Software procedures require that the relationships between crossbarred components be defined via the $ XBAR card in the $CONFIG section of the Startup deck. The $ XBAR card defines logically equivalent data paths through the system.

The key element in crossbarring is component redundancy. Without redundancy on both component levels to which the crossbar configuration applies, use of the crossbar techniques is not possible.

Figure 9-1 depicts three examples of component configuration. Crossbarring is not possible in configuration #1 because components are not redundant on both levels. Configuration #2 has redundant components on two levels, but crossbarring is not in effect. Configuration #3 takes full advantage of the crossbarring technique. The hatched lines represent the logical and physical crossbarring that is not inherent in either of the other two examples.

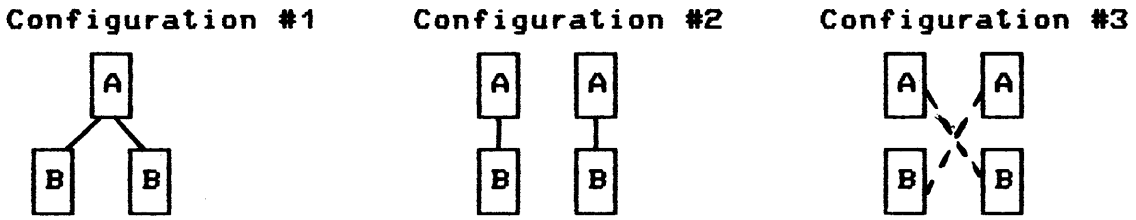

Figure 9-1. Crossbarred and Noncrossbarred Configurations

Components are not identified in Figure 9-1. Any of the following levels of crossbarring is permitted between two components and could be identified in the diagram.

- o Processor and System Control Unit (SCU)
- o SCU and IOM
- o IOM and controller (i.e., MPC)
- o MPC and device. This level of crossbarring is not possible in some instances because there is an insufficient number of physical ports (i.e., connections) on the devices. Consult with the site's FED representative to determine whether crossbarring is possible.

By crossbarring between each of the permitted levels, the site can achieve a fully crossbarred system that can have a major influence on attaining maximum system availability.

SYSTEM CONTROL UNIT (SCU)

The SCU can be crossbarred to the processors and/or to the IOM's. Crossbarring between the SCU and either of these components effectively yields an alternate processor or IOM (i.e., in the event one processor/IOM fails, the alternate unit can assume the workload).

If only one SCU is configured, crossbarring is not possible. Failure of the SCU results in loss of system availability until the SCU is repaired.

If two or more SCU's are configured, there are two recovery alternates if one unit fails; repair the SCU or reconfigure the components. Reconfiguration can be effected by:

1. Shutting down the system by pressing the INITIALIZE push button twice on the system console.
2. Deconfiguring the failing SCU by modifying the $CONFIG section of the Startup deck and changing switch settings.
3. Performing a cold bootload of the system by pressing the BOOTLOAD push button on the system console.

Release of an SCU causes loss of all memory controlled by that unit. In addition, there are hardware efficiencies that can be invoked when multiple SCU's have equally distributed amounts of memory. Release of an SCU removes the site's ability to take full advantage of these efficiencies. Consult with the site's FED representative regarding these efficiencies.

PROCESSORS

Processors can be crossbarred only to the SCU. The effect of the crossbar is to provide multiple data paths between the processor and the SCU. If one SCU fails, it can be dynamically released for testing and/or repair via the console entry RLSEP p while the system continues to operate on the remaining processor (where p = number of system controller port to which the processor is assigned).

Note that when logical processor Ø is released for testing and/or repair, switch settings must be modified on the processor's configuration panel. A configured processor can be reassigned via the console entry ASGNP p (where p = number of system controller port to which the processor is assigned).

INPUT/OUTPUT MULTIPLEXER (IOM)

The IOM is the link to the SCU on one level and to the peripheral subsystem (i.e., the MPC and peripheral devices) on another level. Crossbarring between SCU's and IOM's effectively yields an alternate IOM (i.e., in the event one IOM fails, the alternate can assume the workload). Crossbarring between the peripheral subsystem and the IOM's provides an alternate path for data to flow between the processor and the subsystem.

IOM crossbarring has several possible ramifications, which are contingent upon the degree of component redundancy.

1. If only one IOM is configured, crossbarring is not possible. Failure of the IOM results in loss of system availability because the IOM is linked to components that are critical to system operation. Among these components are the system console (TY1), the disk drives identified as ST1 and on which system files are configured, and the magnetic tape or disk drive on which the Statistical Collection File (SCF) resides.

   Device failure may not affect system availability (i.e., if the failing device is not a critical component or if reconfiguration can be achieved so that the critical component remains active).

2. If at least two IOM's are configured, crossbarring is possible provided there is redundancy at the SCU and/or MPC level. Failure of one IOM does not result in complete loss of system availability because the operable IOM can assume the workload of the failing IOM. However, there may be some impact on system performance. If the system is heavily loaded, throughput may decline. Because all system resources were being used prior to the failure, loss of one component will affect performance. If the system is lightly loaded, throughput may not be affected since the redundant devices may have had a high ration of idle time.

3. The physical characteristics of the peripheral subsystem may not permit crossbarring, even though multiple IOM's are configured (e.g., a single-channel MPC may be configured). Failure of one IOM results in complete loss of availability of all devices attached to that IOM.

   There are two recovery alternatives if the IOM fails: repair the IOM or reconnect the cables so that the devices are attached to an operable IOM rather than to the failing IOM. The failing IOM can be released for testing and repair via the console entry RLSEI m (where m = number of the IOM to be released). Once repaired, the IOM can be reassigned to the system via the console entry ASGNI m.

   Moving of cables is recommended only when absolutely necessary. Because of the physical stress placed on the cables, moving could result in physical damage to them. When cables are moved, changes are required to the $CONFIG section of the Startup deck. Other Startup deck sections (e.g., $FILES and $EDIT) also may be impacted. It is recommended that the Startup deck be completely reviewed whenever cables are moved to ensure that all affected sections reflect the new configuration.

APPENDIX E

NUMBER SYSTEM

ADDRESS CONFIGURATION

DPS8 ADDRESS SWITCH SETTINGS

1. Configure all IOM Base Address first. Each IOM is assigned 1400 octal locations for channel mailboxes.

2. Configure all FNP Mailbox switches next. Use the column in the chart following the last IOM configured. Each FNP is assigned 100 octal location.

   NOTE: Mailboxes on a DN-8 are set in HEX.

IOM #	IOM BASE INTERRUPT BASE	FNP NUMBER	6000 MAILBOX DN6670 (octal)	6000 MAILBOX DN-8 (Hex)
0	3000	x	xxxx	xxxx
		0	5400	2C
		1	5500	2D
		2	5600	2E
	740	3	5700	2F
1	4400	x	xxxx	xxxx
		0	7000	38
		1	7100	39
		2	7200	3A
	741	3	7300	3B
2	6000	x	xxxx	xxxx
		0	10400	44
		1	10500	45
		2	10600	46
	742	3	10700	47
3	7400	x	xxxx	xxxx
		0	12000	50
		1	12100	51
		2	12200	52
	743	3	12300	53

HARDWARE CONFIGURATION

HARD CORE MONITOR

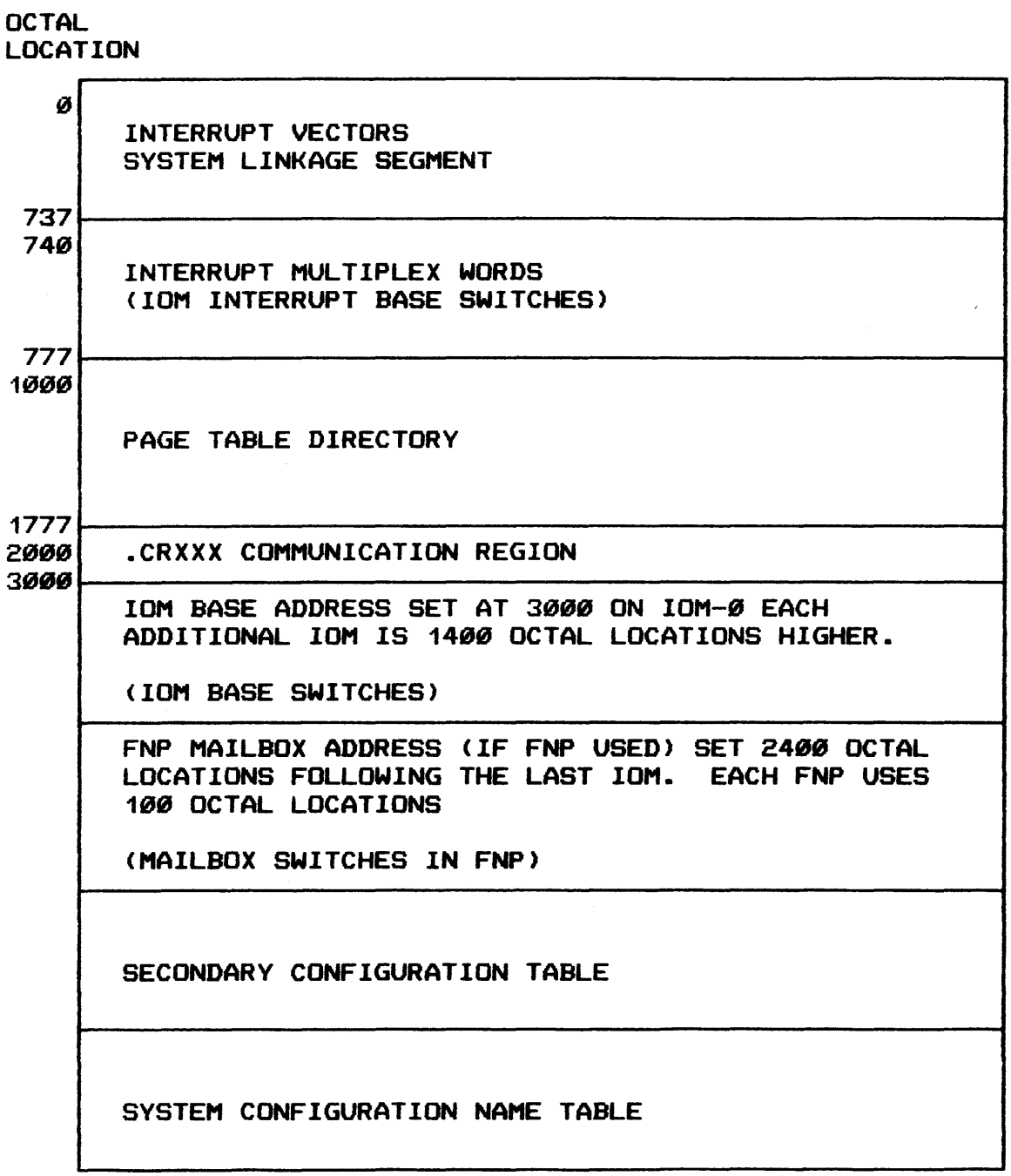

ADDRESS SWITCH SETTINGS

NUMBER SYSTEMS

The largest single character that can be expressed in a number system is one less than the base of the system. This is a basic rule of all number systems and should be understood thoroughly. In the decimal system, which uses 10 as its base, 9 is the largest character.

The largest single character expressible in the following is:

	System Base	Largest Character
Decimal	10	9
Binary	2	1
Octal	8	7

Of course, we are not limited in the size of numbers that we can express in a particular number system. We may go into the billions and higher, if we so desire, in the decimal system. and we can express significantly large values in octal and binary as well as in decimal.

When any column containing a value one less than the base of the system receives another count, that column reverts to zero; and a carry to the next column to the left is made. This is a fundamental role common to all number systems; it should be thoroughly understood and remembered.

For example, in decimal we have:

```
  9      59     999
 +1     +1      +1
 10     60     1000
```

In binary we have:

```
  1
 +1
 10
```

If we use the octal system:

```
  7
 +1
 10
```

ADDRESS SWITCH SETTINGS

NUMBER SYSTEMS

BASIC FILES

The base of a number system tells us how many characters there are in the system. We are speaking of any characters.

1. Decimal

   In the decimal system the particular ten characters that have evolved are:

   Ø, 1, 2, 3, 4, 5, 6, 7, 8, and 9

2. Binary

   The binary system uses only two characters:

   Ø and 1

3. Octal

   The octal system uses the eight characters:

   Ø, 1, 2, 3, 4, 5, 6, and 7

   The octal system is very convenient. It enables us to convert the binary numbers used in our modern day digital computers quickly and easily.

All number systems start with a "units position" which enables us to represent "one" in each system. the position to the left of the units position is the "base position" of the system; it tells what the base of the system is (i.e., how many symbols or characters there are in the system.)

ADDRESS SWITCH SETTINGS

NUMBER SYSTEMS

	Base Position	Units Position
Decimal (base 10) system	10	1
Binary (base 2) system	2	1
Octal (base 3) system	8	1

POSITIONAL VALUES

To arrive at positional values to the left of the base position, we multiply repeatedly by the base of the system. This is a fundamental rule common to all number systems; it should be appreciated and remembered.

Thus, in the decimal system:

In the decimal system:

```
10000      1000      100      10      1<—— Positional Values
            x         x        x      x
                                                  x
           10        10       10      10<——Base
```

In the binary system:

```
32     16     8     4     2     1<————————Positional Values
 x      x     x     x     x     x                  x
 2      2     2     2     2     2<————————Base
```

In the octal system:

```
32,768     4,086     512     64     8     1<—Positional Values
  x          x        x      x     x     x          x
  8          8        8      8     8     8<—Base
```

Then, 10 in the octal system equals 8 in the decimal system. It may be thought of as "1 eight plus 0 ones".

A 14 in the octal system is 1 eight plus 4 ones and, thus equals 12 in the decimal system.

In the octal system, there is no 8's or 9's as single, discrete characters, since these numbers violate the "one less than the base" rule.

A decimal 13 in binary is 1 eight, plus 1 four plus no two's, plus 1 one.

Complete the following counting example, keeping in mind the fundamental rule about generating a carry.

Binary	Decimal	Octal
1	1	1
10	2	2
11	3	3
100	4	4
101	5	5
110	6	6
111	7	7
1000	8	10
1001	9	11
1010	10	12
1011	11	13
1100	12	14
1101	13	15
	14	16
	15	17
	16	20
	17	21
	18	22
	19	23

In the preceding frame, we found that a decimal 17, written in octal, turned out to be 21. Actually, these octal characters mean two 8's (16) plus one equals 17.

ADDRESS SWITCH SETTINGS

NUMBER SYSTEMS

Why do the characters 47 in octal equal 39 in decimal?

Four 8's plus 7 = 39_{10} ($4x9=32+7=39_{10}$)

If we are operating in the binary or base 2 system, our largest permissible character will be a 1 - the value of which is one less than the base of the system.

Ten in binary equals 2 in decimal because the character 1 means one 2 (the base of the system) plus no 1's; this is equivalent to 2.

Continuing, we find that:

Binary	Decimal
10	2
+1	+1
11	3

Eleven in binary equals 3 in decimal because left hand 1 = 1 two, plus 1 one = 3.

Continuing our counting in binary we see that:

Binary	Decimal
11	3
+1	+1
100	4

Remember the rule: Whenever a column which contains one less than the base of the system receives another count, the column goes back to zero; and a carry to the next column to the left takes place.

Binary to Octal conversion:

Binary
Positional Values

16	8	4	2	1	Binary Number
1	0	1	1	1	

The first three binary digits (all 1's) would have the value:

4 + 2 + 1 = 7

Now, since a 7 is the largest single character we can represent in the octal system, we can begin any conversion from binary to octal merely by splitting our binary number into groups of 3 bits, starting at the right and proceeding to the left. For example:

11	11110		111010
	110		111 010

A sample conversion from binary to octal when bits are in groups of three.

421	421	421	421	
11	110	111	010_2	Values (binary) - Equal to 1978 in decimal
3	6	7	2_8	(octal) - 3672_8

A sample conversion from octal to binary:

4	5	6	7_8	(octal)
100	101	110	111_2	(Binary) - Equal to 2423 in decimal

In summary, conversion from binary to octal is accomplished by (1) regarding the binary number as individual "groups of 3" none of which could have a value greater than 7, then (2) simply writing down the octal equivalents of these groups.

Reverse this procedure to convert from octal to binary.

CONVERSION TABLE

	Ø	1	2	3	4	5	6	7	Binary	Octal	Decimal
1Ø	8	9	1Ø	11	12	13	14	15	ØØØ	Ø	Ø
2Ø	16	17	18	19	2Ø	21	22	23	ØØ1	1	1
3Ø	24	25	26	27	28	29	3Ø	31	Ø1Ø	2	2
4Ø	32	33	34	35	36	37	38	39	Ø11	3	3
5Ø	4Ø	41	42	43	44	45	46	47	1ØØ	4	4
6Ø	48	49	5Ø	51	52	53	54	55	1Ø1	5	5
7Ø	56	57	58	59	6Ø	61	62	63	11Ø	6	6
1ØØ	64	65	66	67	68	69	7Ø	71	111	7	7
11Ø	72	73	74	75	76	77	78	79	1ØØØ	1Ø	8
12Ø	8Ø	81	82	83	84	85	86	87	1ØØ1	11	9
13Ø	88	89	9Ø	91	92	93	94	95	1Ø1Ø	12	1Ø
14Ø	96	97	98	99	1ØØ	1Ø1	1Ø2	1Ø3	1Ø11	13	11
15Ø	1Ø4	1Ø5	1Ø6	1Ø7	1Ø8	1Ø9	11Ø	111	11ØØ	14	12
16Ø	112	113	114	115	116	117	118	119	11Ø1	15	13
17Ø	12Ø	121	122	123	124	125	126	127	111Ø	16	14
2ØØ	128	129	13Ø	131	132	133	134	135	1111	17	15
21Ø	136	137	138	139	14Ø	141	142	143	1ØØØØ	2Ø	16
22Ø	144	145	146	147	148	149	15Ø	151	1ØØØ1	21	17
23Ø	152	153	154	155	156	157	158	159	1ØØ1Ø	22	18
24Ø	16Ø	161	162	163	164	165	166	167	1ØØ11	23	19
25Ø	168	169	17Ø	171	172	173	174	175	1Ø1ØØ	24	2Ø
26Ø	176	177	178	179	18Ø	181	182	183	1Ø1Ø1	25	21
27Ø	184	185	186	187	188	189	19Ø	191	1Ø11Ø	26	22
3ØØ	192	193	194	195	196	197	198	199	1Ø111	27	23
31Ø	2ØØ	2Ø1	2Ø2	2Ø3	2Ø4	2Ø5	2Ø6	2Ø7	11ØØØ	3Ø	24
32Ø	2Ø8	2Ø9	21Ø	211	212	213	214	215	11ØØ1	31	25
33Ø	216	217	218	219	22Ø	221	222	223	11Ø1Ø	32	26
34Ø	224	225	226	227	228	229	23Ø	231	11Ø11	33	27
35Ø	232	233	234	235	236	237	238	239	111ØØ	34	28
36Ø	24Ø	241	242	243	244	245	446	247	111Ø1	35	29
37Ø	248	249	25Ø	251	252	253	254	255	1111Ø	36	3Ø
4ØØ	256	257	258	259	26Ø	261	262	263	11111	37	31
				Decimal					1ØØØØØ	4Ø	32

CONVERSION TABLE

BCD

6 Bits	=	Character
36 Bits	=	Word
320 Words	=	Block or 1 LLink
12 LLinks	=	1 Link
5 Links	=	1 Blink

1 LLink	=	11 Binary Cards
14 Words in		1 BCD
27 Words in		1 Binary Card

Bits are Valued Right to Left as follows:

1	1	1	1	1	1	1	1	1
256	126	64	32	16	8	4	2	1

ASCII

9 Bits	=	1 Byte or 1 Character

APPENDIX F

GLOSSARY OF TERMS

ACCEPT NEW TERMINAL (ANT)

A term used to describe the process whereby a Front-end Network Processor (FNP) requests a connection to a host.

ACCOMMODATION MODE

An execution mode in GCOS 8 Ø8 in which the system simulates the run-time environment used by programs in GCOS III OS.

ACTIVITY

A single-program execution or job step; e.g., a compile or assembly that is either part of a job or a job by itself.

ALLOCATION

The assignment of computer resources (memory, peripherals, etc.) to a specific activity of a job.

ASCII

Nine bits used to express an alphanumeric character.

AVAILABLE FILE TABLE (AFT)

A table which holds up to 5Ø file names of files accessed by a TSS user.

BINARY-CODED DECIMAL (BCD)

Six bits used to express an alphanumeric character.

BIT

The smallest unit of memory, a binary digit.

BYTE

A group of bits (nine for ASCII characters and six for BCD characters) usually operated upon as a unit and often used to encode a single character.

CLASSIFIED FILE

A permanent file that has a Security Classification Code associated with it.

CLASSIFIED WORK UNIT

A work unit that acquired a Security Classification Code at system access time.

CLASSIFIED USERID

A userid that has had a security level and one or more security categories associated with it.

CLIMB

A GMAP instruction used to transfer control from one domain into another.

COMMAND BLOCK

A data exchange area between system service software and its caller. The command block is always located by the first vector of the Service Parameter Table for the service.

COMMON SECURITY (CS)

A shared system service which will perform all security validation and provide management of security data.

COMMON USER EXIT MODULE (ESADCUXM)

The user exit Privileged Master Mode Entry processor, a hard-core module into which sites may insert code to process one or more user exits.

CONNECT TO SLAVE (CTS)

A term used to describe the process whereby a Front-End Network Processor requests a connection to a specific process active on the host.

COMMON EXCHANGE INTERFACE (CXI)

The interface between a host and a native mode communications processor.

DAC NAME

A name provided with a remote inquiry which is used by a remote device to connect to a process.

DAC NAME TABLE

A table of program names searched during Default IDENT processing.

DATANET

The name used for a Honeywell Front-End Processor.

DATANET 8

A specially configured DPS 6 or Level 6 used as a front-end processor.

DERAIL (DRL)

A GMAP instruction which is used by subprograms to request a service from the main program. Time Sharing System, Data Management IV/Transaction Processor, and Transaction Driven System are examples of environments that make use of the derail instruction.

DESCRIPTOR

A two-word datum that defines a segment and the access permitted to that segment.

DIRECT ACCESS (DAC)

A way of communicating between a remote device, such as a terminal, and a process. The remote device acts as an online peripheral to the device.

DISCONNECT

The act of breaking the communication link between a remote device and the executing process.

DISTRIBUTED NETWORK SUPERVISOR (DNS)

The operating system for the DATANET 8.

DISTRIBUTED SYSTEMS ARCHITECTURE (DSA)

A standardized set of layered protocols and interfaces which allows for communication between Honeywell products. DSA is a precursor of, and is closely related to, the International (ISO) Communications Standard.

DOMAIN

The set of segments which can be referenced by a process and the access the process is permitted to those segments.

EXIT_NAME (EXITID)

A three-character (ASCII) name that uniquely identifies each user exit.

EXIT_NUMBER (EXITNO)

An 18-bit value associated with each exit-name, which is the position in the exit table of the entry for this exit.

EXIT TABLE

An ordered collection of user exit definitions, used by the Common User Exit Module to process user exit (PMME) calls.

EXTERNAL DESIGN SPECIFICATION

A design specification that details the externally visible characteristics of a product or part of a product.

FILE MANAGEMENT SUPERVISOR (FMS)

The software which correlates file descriptions with physical file space and controls access to it.

FRONT-END NETWORK PROCESSOR (FNP)

A stored program communication processor.

GENERAL COMPREHENSIVE OPERATING SUPERVISOR (GCOS)

An operating system that executes on Honeywell computers.

GCOS 8 OS

An operating system with virtual memory capabilities that executes on Honeywell computers.

GENERAL MACRO ASSEMBLY PROGRAM (GMAP)

The assembly-level language for GCOS III or GCOS 8 products.

GENERAL REMOTE TERMINAL SYSTEM (GRTS)

A non-DSA (Distributed System Architecture) communications operating system used on the DATANET 355 and 18X front-end processors.

GLOBAL MAILBOX NAME

A combination of node identification and mailbox name which is used to uniquely identify the physical connection for a remote device.

HARD CORE

The portion of memory where operating system modules and tables reside.

HARD CORE MONITOR (HCM)

The portion of the operating system which is loaded at system initialization and which stays in memory at all times.

JOB

A series of related activities constituting a logical computer application.

JOB CONTROL LANGUAGE (JCL)

A series of statements transmitted to the operating system by the user to specify the control information for the execution of a batch job.

KNOWN PROCESS INDEX (KPX)

A unique value assigned to a process when it becomes a candidate for execution which remains with the process until it terminates.

LINE ID

A unique two-character code that identifies a remote device within a host GCOS system.

LOGON IDENT

IDENT data equivalent to columns 16-80 of a $ IDENT card image which is formed whenever a user logs onto the system.

MAILBOX NAME

The name which is used to uniquely identify the physical connection for a remote device.

MASTER MODE

A mode of execution in which some instruction and access restrictions are not applied.

MASTER MODE ENTRY (MME)

A GMAP instruction that is used by a process to request a system service.

MEMORY

The internal storage unit of a computer.

NATIVE MODE

The run-time environment in which processes composed of multiple user segments execute on GCOS 8 OS.

NETWORK PROCESSOR SUPERVISOR (NPS)

A network oriented DSA (Distributed Systems Architecture) communications operating system for front-end processors.

PARSER

A process or procedure that separates a statement into basic units according to pre-defined rules.

PERSON_ID

An identification code of up to 12 characters which uniquely identifies an individual user.

PERSON PROFILE

A record which contains information about a system user. The term User Profile is used to refer to either the Person Profile (when the Person Identification security option is active) or the Project (userid) Profile (when the Person Identification security option is not active).

PERSONAL IDENTIFICATION CODE (PIC)

A system-generated random alphanumeric code up to eleven characters long which is used to authenticate a person_id.

PRIVILEGED MASTER MODE

A processor mode for GCOS in which no instruction or access restrictions are applied.

PRIVILEGED MASTER MODE ENTRY (PMME)

A GMAP instruction which is used to request a system service.

PRIVILEGED PROCESS

A process which is allowed to enter master mode.

PRIVILEGED SECURITY ADMINISTRATOR

A person responsible for maintaining security information. This administrator's User Profile contains the privileged administrator attribute, which allows the administrator to perform certain (privileged) maintenance functions.

PROCESS

A uniquely defined system entity executing on a procesor and having temporary control of certain system resources. A process is known by its current Known Process Index.

PROCESS START

A point at which a process is ready to begin execution.

PROCESS WORK UNIT

A work unit which is initiated at process start.

PROFILE

A group of records maintained together on the security data base. The records with a profile are physically all the same size and usually, but not necessarily, contain information in a common format.

PROGRAM

A set of instructions for solving a problem on a computer.

PROJECT

An indentifier, up to 12 characters in length, which designates a subset of the file system. A userid is treated as a project name when the Person Identification (PID) security option is active.

PROJECT_NAME

An identifier, up to 12 characters in length, which designates a subset of the file system. A user identification is treated as a project name when the PID security option is active.

REGISTERED USERID

A userid which has been registered (as a project) on the security data base.

REMOTE BATCH

A batch job that enters the central system from a remote computer via a communications processor.

REMOTE IDENTIFICATION

A two-character identification which defines the destination of remote output.

REMOTE INQUIRY

A notification by a process to inform the operating system that the process is ready to accept a remote direct access connection.

REMOTE WORK UNIT

A work unit which is initiated by a logical remote connection.

SECURE-DNS FNP

A Front-End Network Processor executing the Distributed Network Supervisor (DNS) software which has been modified to support Enhanced Security.

SECURITY ADMINISTRATOR

A person responsible for maintaining security information. The Security Administrator's User Profile contains the administrator attribute, which allows the Security Administrator to perform certain (privileged) maintenance functions.

SECURITY ADMINISTRATOR MAINTENANCE PROGRAM (SAM)

A database administration facility used for collecting, accessing and modifying sets of user profile data.

SECURITY BREACH

A condition which could pose a threat to the security of the system.

SECURITY CATEGORY

A category, represented by a two-character code, which is used to further restrict the access capabilities associated with a security level.

SECURITY CLASSIFICATION CODE (SCC)

A three-character code formed by the combination of a security level with a security category. SCCs are used to restrict access to classified data.

SECURITY DATA BASE

The data base which contains security-related information for the system.

SECURITY EVENT ROUTING MATRIX

A bit map used to direct the reporting of a security breach to specific Security Logging Terminals (SLTs).

SECURITY LEVEL

A level with a hierarchy of access capabilities which is represented by a one-character code.

SECURITY LOGGING TERMINAL (SLT)

A terminal in receive-only mode which has been designated to receive notification of security breaches.

SEGMENT

An area of contiguous virtual memory which is accessed via a descriptor.

SERVICE PARAMETER TABLE (SPT)

A standard structure used for passing data. An SPT contains a vector list, control information and returned information.

SHARED MODULE

A module, either Hard Core Monitor or Slave Service Area, that maintains no local storage and that accesses caller-specific data via the caller's process registers.

SHARED SOFTWARE

System software that resides in a shared workspace. This software is shared due to the fact that the instructions that constitute each shared software entity are shared by all calling processes.

SHARED WORK SPACE

A work space in which shared software resides.

SITE [-DEFINED] USER EXIT

A user exit inserted by a site into a GCOS module.

SITE EXIT TABLE

An exit table that contains only site user exit definitions.

SLAVE PROGRAM

A process that has been assigned a Known Process Index, as opposed to GCOS which is a collection of interdependent modules that usually execute as extensions to slave and system slave programs.

SLAVE MODE

The normal mode for non-privileged user programs. More instruction and access restrictions are applied than in master mode.

SLAVE SERVICE AREA (SSA)

A segment and a process work space which contains system information relating to that process.

SNUMB

A unique identifier, up to five characters, assigned to a job by the originator. The SNUMB appears on printed and punched output and is used to identify such output.

STATION_ID

A two-character identification which defines the destination of remote output.

STATISTICAL COLLECTION FILE (SCF)

A file to which accounting data is written.

SYSTEM DEFAULT IDENT

An IDENT image skeleton up to 65 characters long which contains Default IDENT information. This skeleton may be used for the construction of a Logon IDENT and will be stored on the Security Data Base.

SYSTEM [C-DEFINED] USER EXIT

A user exit embedded in the released version of a GCOS module, as part of the product.

SYSTEM EXIT TABLE

An exit table that contains only system user exit definitions.

SYSTEM SERVICE SOFTWARE

Software that does not reside within the work space of a process but which is able to be accessed by any process. Accessing this software may be accomplished through use of a Master Mode Entry, Privileged Master Mode Entry, or CLIMB instruction or through a macro routine that incorporates one of those three service-calling mechanisms.

TIME SHARING SYSTEM (TSS)

A procesing dimension under the control of the GCOS operating system that services remote computer terminals. TSS allows language processing, program execution and updating, file maintenance and management, and many other services, in an interactive environment. TSS manages its own resources, memory, disk space and I/O.

TSS SUBSYSTEM

A subprogram which processes a Time Sharing System (TSS) user request. It executes within the memory allocated to TSS and under the control of TSS.

TSS SUBSYSTEM IDENT

IDENT data equivalent to columns 16-80 of a $ IDENT card image which is stored in the user's WUP for use with certain TSS commands which require a $ IDENT card image.

USER EXIT

A Privileged Master Code Entry interface contained in a GCOS module (Hard Core Monitor, Slave Service Area, shared system service, accommodation mode system process, or native mode system process), that allows execution of a site-supplied processing routine as an extension of GCOS processing.

USER IDENTIFICATION (USERID)

An identification code of up to 12 characters which is used to access a system and regulate use of system resource.

USER PROFILE

The description of a record which contains information about a system user. In this document, the term User Profile is used to refer to either the Person Profile (when the Person identification (PID) security option is active) or the Project (userid) Profile (when the Person Identification (PID) security option is not active).

USER STATUS TABLE (UST)

A table within the memory allocated to Time Sharing System (TSS) which contains information about a TSS user. An entry in the UST is associated with each TSS user.

VECTOR

A two-word datum used to create a description which specifies a subset of the extent and attributes of another descriptor.

WORK UNIT

The activity which takes place from system access until system exit.

WORK UNIT UNIQUE IDENTIFIER (WUI)

A system generated value which uniquely identifies a work unit.

WORK SPACE

One of 512 logical partitions of virtual memory.

ACRONYMS

AFT	Available File Table
ANT	Accept New Terminal
ASCII	American Standard Code for Information Interchange
BCD	Binary Coded Decimal
CS	Common Security
CTS	Connect To Slave
CXI	Common Exchange Interface
DAC	Direct ACcess
DN8	DATANET 8
DNS	Distributed Network Supervisor
DR	Descriptor Register
DSA	Distributed System Architecture
FMS	File Management Supervisor
FNP	Front-end Network Processor
GCL	GCOS Control Language
GCOS	General Comprehensive Operating Supervisor
GCOS 8	General Comprehensive Operating Supervisor 8
GMAP	General Macro Assembler Program
GRTS	General Remote Terminal System
HCM	Hard Core Monitor
ILCRL	Initiate Logical Connection Request Letter
JCL	Job Control Language
KPX	Known Process indeX
NPS	Network Processing Supervisor
PER	PERson_id

GLOSSARY OF TERMS

ACRONYMS

PIC	Personal Identification Code
PID	Person IDentification security option
RFU	Reserved for Future Use
SAM	Security Administrator Maintenance Program
SCC	Security Classification Code
SCF	Statistical Collection File
SLT	Security Logging Terminal
SMC	System Master Catalog
SNUMB	job Sequence NUMBer
SPT	Service Parameter Table
SR	Software Release
SRB	Software Release Bulletin
SSA	Slave Service Area
TM	Terminal Manager
TSS	Time Sharing System
TTY	TeleTYpe
USERID	USER IDentification
UST	User Status Table
VIP	Visual Information Processor
WSR	Work Space Register
WUI	Work Unit Identifier
Xn	indeX register n

APPENDIX G

BATCH CONSOLE EDITOR (JCLGEN)

BATCH CONSOLE EDITOR (JCLGEN)

The Batch Console Editor allows BCD text permanent files to be created, examined, and changed from the console. This editing technique resembles the editing concepts implemented in the TEX editor, but it is an entirely separate entity. An example of its use might be to change files under OPNSUTIL that are used for spawning jobs. Thus, changes can be made even though neither Time Sharing nor a card reader are available.

The typical use of the Batch console Editor is to read a file into the buffer, change it, and write the buffer back to the same or a different file. Also, new information can be written to a new file.

By Batch Console Editor default, the User Master Catalog (UMC) OPNSUTIL, established by the .MPOPM module, is used for editor command pathnames unless a different userid is supplied. (.MPOPM may have been patched to establish a different name for this UMC.) The Batch Console Editor can access files other than those cataloged under OPNSUTIL if the appropriate permission is available to the OPNSUTIL user master catalog for the file to be accessed.

If an error occurs during a file read or write, the Batch console Editor issues the appropriate FMS supplied error message (i.e., the console editor does not generate its own messages in this case.)

The Batch console Editor is available at any time during system operation. It is initiated by entering the console command JCLGEN. The system response is a "-", after which one of the editing commands can be entered.

CONDITIONS AND RESTRICTIONS

The following conditions and restrictions apply to the Batch console Editor function:

- Commands may be entered by their first letter with the exception of PO, CO, and IB
- Multiple commands are permitted on one line
- Commands within one line are delimited by the next command or by one or more spaces, depending on whether the one-character-command-only mode is on or off
- Leading spaces are tolerated

CONDITIONS AND RESTRICTIONS (Cont'd.)

- String delimiters can be any character that is not part of a full command name for a string searching command; the string is terminated by the next occurrence of this same character (special characters, such as the colon, are the most commonly used delimiters).
- If an error is encountered, the rest of the command line is ignored.
- Commands are prompted by a dash (-).
- Insertions are prompted by an asterisk (*) and terminated by an EOM.
- For line input (insert/replace), the colon is interpreted by default as a tab character, which may be changed with the TAB command (the fixed tab positions are set to 8, 16, 32, and 73).
- Output from the PRINT command can only be terminated by aborting JCLGEN; enter ABORT JCLGEN at the console.
- The PRINT command prints all specified lines in the buffer including any binary data.
- In conjunction with the PO (Printer_Out) command, a print or permanent file may be optionally allocated using a JCL statement with the file code PR as a patch in .MPOPM:

```
$       PRINT   PR ...
$       PRMFL   PR ...
```

EDITOR COMMANDS

The Batch Console Editor commands are grouped below according to their basic type of action:

- Access File
- Search and print buffer
- Change buffer contents
- Control editor

ACCESS FILE

R[EAD] pathname - Read the specified file into the buffer; pathname = [user-master-catalog]/sub-catalog/filename (default user-master-catalog is OPNSUTIL)

W[RITE] pathname - Write the buffer to the specified file-name (if the pathname is not entered, the previous READ command pathname is the default); the file is created if it does not already exist.

SEARCH AND PRINT BUFFER

F[ORWARD] - Forward space one line

F[ORWARD];n - Forward space n lines

F[ORWARD];* - Forward space to end of buffer

B[ACKUP] - Backup to the start of the buffer

B[ACKUP];n - Backup n lines

= - Print the current line number

F[IND]:/string/ - Searches the buffer in a cyclic fashion, starting with the current line plus one and terminating on the current line.

NOTE: If operating in the one-character-command-only mode (default), full spelling of this command has the effect of a FORWARD followed by an INSERT command.

P[RINT] - Print current line

NOTE: If operating in the one-character-command-only mode, full spelling of this command has the effect of a PRINT followed by a READ command because the second letter of PRINT is interpreted as a one-character READ command. (An error message would be generated as a result of the invalid pathname following the unintentional READ command.)

SEARCH AND PRINT BUFFER (Cont'd.)

P[RINT];n — Print n lines starting at the current line.

P[RINT];* — Print all lines from the current line to the end of the buffer.

P[RINT]:/string/ — Print the line containing the specified string.

{H[ELP]}
(?) — Print a summary of the editor commands; the character "?" is a legal command in this case.

CHANGE BUFFER CONTENTS

I[NSERT] — Insert lines after the current line

IB — (Insert_Before) Insert line(s) before the current line

D[ELETE] — Delete the current line

D[ELETE];n — Delete n lines starting at the current line.

D[ELETE];* — Delete all lines from the current line to the end of the buffer.

C[HANGE] — Change the current line by deleting the current line and inserting a new line(s).

C[HANGE]:/string1/:/string2/

— Replace string1 with string2.

NOTE: C:/string/ is shorthand for C:/string/:// which is equivalent to a delete string command.

CONTROL EDITOR

1 CH ON	- Set on-character-command-only mode on. Each command is identified by its first character only. This is the default mode. Commands do not require an explicit delimiter. The entire command should not be entered because the editor would attempt to interpret each character as a separate command. In this mode, the following are valid commands: FP=C:/string1/:/string2/F:/string3/D
1 CH OFF	- Set one-character-command-only mode off. A command is recognized in its entirety or by its first character. Each command must be delimited by a space. A valid command sequence would be:

FORWARD P = C:/string1/:/string2/ F:/string3/ DELETE

T[AB]x	- Set the tab character to x (default is ":").
Z;n	- Put the editor to sleep for n seconds (default time is one minute).
PO	- (Printer_Out) Switch the output stream to an optional, temporary, print file allocated with a PR file code, to be printed by SYSOUT with a fixed SNUMB of JCLGEN.
CO	- (Console_Out) Switch the output stream back to the console.
Q[UIT]	- Exit the Batch Console Editor.

ERROR MESSAGES

Problems involving the entry of editing commands result in one of the following error messages being issued to the console:

ILLEGAL COMMAND - Operator entered a command other than those allowed or misspelled a valid command.

SEARCH FAILED - The search string requested has not been found in the file.

STRING ERROR - The syntax of the search string has been entered incorrectly.

INVALID SYNTAX - The general command syntax was not entered correctly.

INVALID CAT/FILE STRING

- The pathname entered with the READ or WRITE command does not exist as entered.

NO FILE NAME SPECIFIED

- No filename was entered as part of the pathname accompanying the READ or WRITE command (the correct filename should be entered).

PERMISSIONS DENIED

- The user does not have READ or WRITE permission to the file referenced by the READ or WRITE command.

PRINT FILE NOT ALLOWED

- A PO (Printer_Out) command was entered but print file (file code PR) has not been previously established (this message only occurs when the Batch Console Editor is initiated as a batch job by some method other than entering the console command JCLGEN).

APPENDIX H

STARTUP CONSOLE EDITOR

STARTUP CONSOLE EDITOR FOR AUTOLOAD FILE

An edit facility allows the Startup job stream image on the AUTOLOAD file to be edited from the console. An AUTOLOAD file must exist in order to use this edit facility. The console editor is called into execution during Startup as follows:

- Enter the word TEXT in response to any question asked by Startup, or
- Enter the word TEXT in response to the ??? prompt after pressing the REQUEST push button.

The console edit function operates on the Startup BCD images in memory. The following commands are available within the editor:

F[IND]:/string/	- Search the job stream in a cyclic fashion with the current statement plus one and terminating on the current statement
F[ORWARD]	- Forward space one statement
F[ORWARD];n	- Forward space n statements
F[ORWARD];#	- Forward space to end of job stream
P[RINT]	- Print the current statement
P[RINT];#	- Print all statements from the current statement to the end of the job stream
P[RINT];n	- Print n lines starting with the current line
P[RINT]:/string/	- Print the statement containing the specified string
I[NSERT]	- Insert statement(s) after the current statement
IB	- Insert statement(s) before the current statment
D[ELETE]	- Delete the current statement
D[ELETE];n	- Delete n statements starting at the current statement
D[ELETE];#	- Delete all statements from the current statement to the end of the job stream

C[HANGE]	- Change the current statement; Delete the current statement and Insert new statement(s)
C[HANGE]:/string1/:/string2/	- Change the content of string1 with the content of string2
B[ACKUP]	- Backup to the start of the job stream
B[ACKUP];n	- Backup n statements
Q[UIT]	- Exit from the editor
PO	- Switch the output stream to a printer
CO	- Switch the output stream to the console
(R)ead	- Reinstate Startup (including BCD card images) from AUTOLOAD file
(V)erify	- Verify editor operators. This is a toggle
X;#	- Repeat the last command
=	- Print the current statement number
T[AB] x	- Set tab character to x (default is :)
H[ELP]	- Print a summary of the editor commands

Commands are denoted by their first letter with the exception of PO, CO, and IB. Multiple commands are permitted on a line and are delimited by the next command or a space. Leading spaces are tolerated. Any character is accepted as a string delimiter.

If an error is encountered, the rest of the command line is ignored.

On card input (insert/replace), colon is interpreted as a tab character. Tabs are set to: 8,16,32,73.

Upon exiting the editor, the AUTO boot is automatically performed.

If the output stream is a printer, the print command prefixes statements with their relative statement number.

Binary statements (firmware) are treated in a totally transparent manner.

Output from the print command may be terminated by hitting the request key.

The autoload file is automatically updated when quitting the console editor.

APPENDIX I

CONSOLE MANAGER FACILITY

CONSOLE MANAGER FACILITY

NEW FEATURES CHECKLIST

- MESSAGE JOURNAL AND RECALL
- END OF DEPENDENCY ON HARD-COPY CONSOLES
- TERMINALS ON FRONT-END PROCESSORS AS CONSOLES
- MASTER CONSOLE CONCEPT
- COMMAND PERMISSION/RESTRICTION
- MESSAGE ROUTING
- PROFILES
- INTER-CONSOLE CONVERSATION
- SECURITY
- WRITE/READ UNCOUPLING
- NEW COMMAND SYNTAX
- UP TO 16 CONSOLES SUPPORTED

THE MASTER CONSOLE

- ONE AND ONLY ONE AT ALL TIMES
- INITIALLY "TY1"
- MASTER CAN MOVE MASTER STATUS TO ANOTHER CONSOLE
- SECURITY CONTROL POINT
- CERTAIN COMMANDS CAN BE USED ONLY BY MASTER
- ADMINISTRATIVE CONTROL

MESSAGE ROUTING

- INITIAL MASTER STARTS WITH ALL MESSAGES

- OTHER CONSOLES
  - START WITH MINIMAL SET
  - MASTER CAN ASSIGN OR REMOVE MESSAGES FROM ANY CONSOLE, INCLUDING ITSELF

- UNIT OF ROUTING IS THE "MESSAGE CLASS"

- SOLICITED MESSAGES
  - TO ORIGINATING CONSOLE

- UNSOLICITED MESSAGES
  - BASED ON MESSAGE CLASS ROUTING

EXAMPLE OF PERMISSIONS AND ROUTING

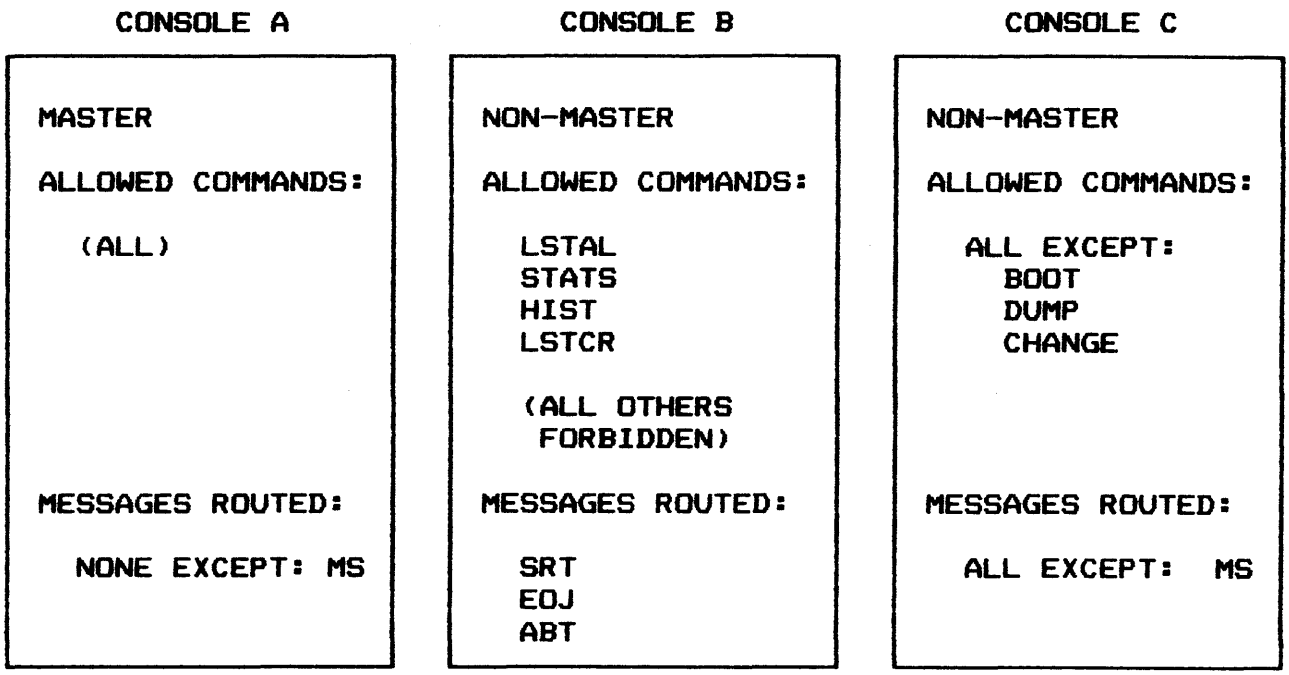

PROFILES

- PROFILE CONTAINS
  - LIST OF COMMAND PERMISSIONS
  - LIST OF MESSAGE CLASSES

- MASTER CREATES AND SAVES PROFILES
  - DISK FILE MAINTAINED BY SYSTEM
  - CAPACITY FOR HUNDREDS OF PROFILES
  - DEFAULT PROFILES

- MASTER USES PROFILE
  - QUICK WAY TO GIVE PERMISSIONS TO A NEW CONSOLE
  - QUICK WAY TO CHANGE PERMISSIONS OF OLD CONSOLE

CONVERSATION BETWEEN CONSOLES

- CONSOLE CAN SEND A SHORT MESSAGE
  - TO ANY OTHER CONSOLE, BY NAME
  - TO THE MASTER
  - TO ALL CONSOLES

SECURITY

- CONCERN MAINLY FOR REMOTE CONSOLES

- DIVIDED RESPONSIBILITY
  - CONSOLE MANAGER
  - SITE

- CONSOLE MANAGER MUST
  - CHECK GLOBAL PASSWORD
  - INFORM MASTER
  - PROVIDE SUPPORTING FEATURES

    COMMAND RESTRICTION, PROFILES, CONVERSATION, ETC

- SITE MUST
  - ESTABLISH POLICIES AND PROCEDURES
  - EXPLICITLY GRANT PRIVILEGES TO EACH NEW CONSOLE

WRITE/READ UNCOUPLING

- WHAT IT IS
  - W/R MESSAGE IS ONE THAT REQUIRES OPERATOR INPUT
  - W/R ISSUED AS WRITE-ONLY
  - OPERATOR NOT FORCED TO RESPOND IMMEDIATELY
  - OPERATOR SUPPLIES A "KEY" WITH INPUT
  - UNANSWERED MESSAGES REPEATED PERIODICALLY

- PURPOSE
  - ELIMINATE CONSOLE BOTTLENECKS
  - GIVE OPERATOR MORE FREEDOM
  - RESPOND TO SCPs

EXAMPLE

WITHOUT W/R UNCOUPLING	WITH W/R UNCOUPLING
ENTER TAPE NUMBER - 90222	>>>31 AT 11:01 : ENTER TAPE NUMBER . . . ???31 90222

COMMAND SYNTAX

- USED INITIALLY FOR CONSOLE MANAGER COMMANDS ONLY

- RECOGNIZES ABBREVIATIONS

- PHILOSOPHY AND STYLE
  - BORROWED FROM MULTICS AND LEVEL 6
  - COMPOUND-WORD COMMAND, UNDERSCORE SEPARATORS
  - KEY WORDS IDENTIFIED BY PRECEDING DASH
  - CONSISTENT SET OF NAMES FOR KEY WORDS AND COMMANDS

EXAMPLE

```
ADD_OPERATOR_COMMAND  LSTAL  -OPERATOR_STATION SUSAN
```

OR IN ABBREVIATED FORM:

```
AOC LSTAL -OS SUSAN
```

CONSOLE JOURNAL

- RESPOND TO MANY SCPs

- JOURNAL CAPTURES MESSAGES
  - INPUT AND OUTPUT
  - ONLY MESSAGES PRODUCED WHILE CONSOLE MANAGER IS RUNNING

- RECALL FROM JOURNAL
  - TO CONSOLE
  - TO SYSOUT

- RECALL SELECTIVITY
  - BY-TIME-OF-DAY WINDOW
  - BY JOB
  - BY MESSAGE CLASS
  - BY USER ID

CONSOLE MANAGER FACILITY

INTERNAL DESIGN OVERVIEW

- o CONSOLE MANAGER PROCESS
  - OWNS ALL CONSOLES
    - IOM AND FNP
  - DOES ALL CONSOLE IO
  - PROCESSES CONSOLE MANAGER COMMANDS
  - PASSES MESSAGES TO JOURNAL

- o IOS
  - PASSES IO REQUESTS TO CONSOLE MANAGER

- o JOURNAL AND RECALL
  - ARE SEPARATE PROCESSES
  - OWN JOURNAL DATA BASE

- o NATIVE MODE RUN-TIME ENVIRONMENT
  - SHARED DOMAIN
  - MEMORY SEGMENTATION AND PROTECTION FEATURES USED EXTENSIVELY

INSTALLATION

- OPTIONALITY

  0 = BASIC

  A = BASIC + FNP

  B = BASIC + JOURNAL

  C = BASIC + FNP + JOURNAL

- PACKAGING

  The Shared Run-Unit Library (SHRULIB). Most of the new Console Manager software is resident on the SHRULIB, shipped with all systems.

  The Run-Unit Library (RULIB). Each separately priced option or option combination is represented by a separate run-unit.

  .MCONS, a hardcore module which supports the Console Manager, is shipped with all systems.

- LOADED BY

  - Edit AT STARTUP

  - NO SPECIAL FILES

INITIATING THE CONSOLE MANAGER

The Console Manager is initiated by executing the appropriate JCL under the SYS_SOFTWARE Catalog restored from the PSP-SAVES tape. The JCL selected will depend on the Console Manager functionality purchased by the installation.

The site administrator has considerable flexibility in setting up this JCL and in establishing procedures for executing the software. What now follows is a recommended and simple approach.

The administrator should build a SPAWN file that can either be run by the console operator or run automatically by SYSPN once the system is functional. This process can have any SNUMB. For the purposes of this discussion we will use CMANx:

where "x" is 0 = The basic Console Manager functionality.

A = The basic Console Manager plus FNP functionality.

B = The basic Console Manager plus Journal/Recall functionality.

C = The basic Console Manager plus FNP and Journal/Recall functionality.

INITIATING

CONSOLE MANAGER PROCESSES

FUNCTIONALITY	RULIB OPTIONS	(SNUMBS)			
		CMANx	CM_CA	CM_JO	CM_RE
Basic CM	CMGROO	X	X		
Basic CM plus FNP	CMGROA	X	X		
Basic CM + JOR/REC	CMGROB	X	X	X	X
Basic CM + FNP + JOR/REC	CMGROC	X	X	X	X

INITIATING

This file must contain thee following $ SELECT statement:

```
$       SELECT SYS_SOFTWARE/nnnn/JCL/CMGROx.SPAWN
```

where: nnnn = the current software release number

This statement invokes the appropriate JCL file from SYS_SOFTWARE. It will include a statement in this form:

```
$     RUN  RUFILE=SYSTEM,RUNAME=CMGROx,OPTION=DUMP,SSDUMP,NJREST
```

where: RUFILE=SYSTEM means use the System Library.
and RUNAME=CMGROx means use the key module, CMGROx on the Run-unit Library.

Thus, in effect, unlocks the functionality purchased by the installation and puts it into execution.

Included also in the same JCL is a statement in the form:

```
$       PRMFL  SF....SYS_SOFTWARE/nnnn/DATA/CMGROx.JCL
```

This file contains additional JCL from the SYS_SOFTWARE catalog. When the original SNUMB, CMANx, begins to execute, it spawns successive processes using the JCL contained in the SF file.

The site should be aware that these processes must all be in execution for the Console Manager to be fully functional. If the first process, CMANx, aborts for any reason, the others will all abort. These will all be restarted when the Console Manager restarts.

PROFILES

CONSOLE PROFILES

Each console on the system, IOM/SSF console or FNP terminal, has a set of attributes associated with it. Two of these attributes can be manipulated by the master console. these are routing information and command permissions. These attributes are combined into a unique entity called a "profile".

A console profile specifies a set of output message classes and a set of allowed verb/commands. The profile has a name, 1-12 characters with no blanks. It can be saved and referenced by the set of OPERATOR_PROFILE commands AOP, LOP, WOPY and DOP. Profiles may be changed, saved, and assigned by the master console only. (Ref. 5)

Console profiles reside in the Unified Profile System (UPS) files under the UMC SYS_SOFTWARE. They ae created and changed only by the master console through the use of four OPERATOR_PROFILE commands:

WRITE_OPERATOR_PROFILE	(WOP)
ASSIGN_OPERATOR_PROFILE	(AOP)
LIST_OPERATOR_PROFILE	(LOP)
DELETE_OPERATOR_PROFILE	(DOP)

When a profile is assigned to a particular console, that console is allowed to see only those message classes indicated by the profile and can only execute the verbs indicated.

Message classes and Verb Permissions may be manipulated individually through the use of SYSTEM_MESSAGES and OPERATOR_COMMANDS. However, these changes must be saved into a profile if they are to be retained.

An example of building a profile follows:

```
??? AOC -ALL -OS FRED
??? DOC DUMP,BOOT,CHANGE,CHANGF -OS FRED
??? ASM SRT,EOJ,ABT -OS FRED
??? WOP -OP  JOBWATCH -OS FRED
??? LOP -OP JOBWATCH
```

PROFILES (Cont'd.)

***Profile JOBWATCH has the following Verb attributes:

(Listed here are all operator verbs except BOOT, CHANGE, CHANGF, AND DUMP)

***Profile JOBWATCH has the following Message Class attributes:

abt, eoj, srt

When the WOP command is executed, a new profile called JOBWATCH is created, if one by that name did not previously exist. If it did exist, this command will result in the previous contents being replaced by this console's current message classes and verb/command attributes.

PROFILES

MAXIMUM NUMBER OF PROFILES

No maximum number of profiles may be specified for storage in the UPS files. The number depends on the size of the files, the size of the profile records, the amount of file space used by other applications, etc.

In general, space should be available for several hundred console profiles. However, before creating such a large number of profiles, the following considerations should be observed.

- The LIST_OPERATOR PROFILE (LOP) command will list only the first two hundred profiles it encounters when searching the file. Other profiles can still be listed individually using the -OP option, and can be accessed with the other profile commands.

- The use of a large number of profiles, while possible, is inefficient. In particular, the LOP command, (without the -OP option) can execute for a long period of time when many console profiles exist.

DEFAULT PROFILES

The console Manager recognizes special names for "default profiles". These are automatically assigned to new consoles as they sign on the network. IOM, IOX, or SSF connected consoles are assigned a profile from the IOM_DEFAULT profile if a profile by that name exists. FNP consoles are assigned profiles from FNP_DEFAULT if it exists. These profiles must be specifically created by the site via a WRITE_OPERATOR_PROFILE command.

If no defaults exist, new consoles are assigned an extremely minimal initial profile. If no IOM_DEFAULT profile exists, certain message classes and the ANSWER_SYSTEM_ QUERY command are unconditionally assigned to iom consoles. The message classes assigned will be those corresponding to any device names supplied on the IOM/IOX startup CONFIG statement for that console. FNP consoles are assigned no message classes if an FNP_DEFAULT profile does not exist, but they are assigned the same default command(s) assigned to IOM consoles.

In the absence of a profile, the following configured IOM consoles would be supplied with the default indicated.

		CONFIG STATEMENT	NAME	DEFAULT MESSAGE CLASS
$	IOM-0	PUB-30,CS66,TY1,TY2,TY3,TY4	C0030	TY1,TY2,TY3,TY4
$	IOM-0	PUB-31,RMC66,TR1	C0031	MAIN

MESSAGE CLASS TABLE

CODE	MNEMONIC	T	FC	S	C	DESCRIPTION
Ø1	MTERR	1	T*	N		MAG TAPE ERROR, TY REPLY
Ø2	DEVERR	1	*T	N		OTHER ERROR, TY REPLY
Ø3	MTTHR	3	T*	Y		MAG TAPE ERROR THRESHOLD
Ø4	DEVTHR	3	*T	Y		OTHER ERROR THRESHOLD
Ø5	MNT	2	T*	N		MOUNT - DISMOUNT - READY
Ø6	CRCP	2	*T	N		CARD READER-CARD PUNCH INFO
Ø7	SRT	4	T/	Y	*	SRT
1Ø(Ø8)	EOJ	5	T/	Y	*	EOJ
11(Ø9)	GET	2	/T	Y		ALLOC RETRIEVE
12(1Ø)	DELAY	3	T/	Y		JOB DELAYED
13(11)	COMM	2	T/	Y		$COMMENT CARD
14(12)	TY1	1	T/	N		TY1 (T/)
15(13)	TY2	1	T*	N		TY2 (T*)
16(14)	TY3	1	*T	N		TY3 (*T)
17(15)	TY4	1	/T	N		TY4 (/T)
2Ø(16)	RC	4	T/	Y		REMOTE GEIN, SYSOUT
21(17)	TSS	3	T/	Y	*	TSS
22(18)	MAINT	1	T.	N	*	MAINTENANCE (T.)
23(19)	SPAWN	1	.T	N	*	SPAWNING CONSOLE (.T)
24(2Ø)	VIDEO	6	V*	N		VIDEO
25(21)	TAB	6	-	N		ASCII CONSOLE CONTROL TAB SET/CLEAR
26(22)	ABT	4	T/	Y	*	ABT, END, DLT
27(23)	MS	3	T/	N	*	MASTER CONSOLE MESSAGES
3Ø(24)	OSIM	1	T*	N	*	OSIM MESSAGE
31-47(25-39)	console numbers addressed by calculating console code + 14					

T - tab code
FC - file code
S - Y = message can be suppressed
N = message cannot be suppressed
C - * = change in definition since SR2ØØØ

NOTE: MNEMONICS for use in new operator commands will be up to 8 characters

COMMANDS

COMMAND COMPONENTS

A command consists of a verb and an object. The verb is the action and the object is the construct upon which a verb operates. For the Console Manager, an object consists of two words joined by an underscore (_) character and the verb is joined to the object also by an underscore. Thus a command consists of three entities joined by the underscore character.

CMF COMMANDS

- Add_Operator_Command — AOC Master Only
  Add command to operators list that he can execute

- Add_System_Messages — ASM
  Assign specified system message class to console

- Answer_System_Queries — ASQ
  Answer the system message

- Assign_Operator_Profile — AOP Master Only
  Attach Profile to console

- Delete_Operator_Command — DOC Master Only
  Delete specified command from list

- Delete_Operator_Profile — DOP Master Only
  Delete profile from database

- Delete_System_Messages — DSM Master Only
  Delete specified msg class from console's list

- List_Operator_Journal — LOJ
  Provide logical view of Journal

- List_Operator_Profile — LOP Master Only
  Display Operator Profile

COMMANDS (Cont'd.)

- List_Operator_Station — LOS
  Display summary of consoles

- List_System_Queries — LSQ
  Print all messages that are to be answered

- Move_Master_Status — MMS Master Only
  Reassign Master Status

- Move_System_Messages — MSM
  Assign a message class from one console to another

- Print_Operator_Journal — POJ
  Provide hard copy of Journal to Sysout

- Resume_System_Messages — RSM
  Remove suspension of messages

- Send_System_Messages — SSM
  For inter console communication

- Suspend_System_Messages — SUSM
  Inhibit specific message(s) from specified console

- Write_Operator_Profile — WOP Master Only
  Save profile on Database

MASTER CONSOLE

GENERAL

Along with the Console Manager comes the concept of a "Master Console". One and only one console at any given moment may be considered the master. the Master console has special privileges and responsibilities both for security and for administrative control. Certain commands can be executed only by the Master and certain types of messages are automatically routed to the Master.

An IOM console configured as TY1 in the Startup Deck must be present at system boot time. TY1 becomes by default the Master when the Console Manager takes control after which the Master Operator is free to assign ("move") master status to some other console whether local or remote. Only the current Master can reassign Master status to another console.

COMMANDS EXECUTABLE BY MASTER

The Master can execute all commands in the operator's repertoire. Additionally, the following commands are reserved for execution only by the Master Console:

- Add_Operator_Command (AOC)	Add command to the specified operator's list
- Assign_Operator_Profile (AOP)	Attach specified profile to operator station
- Delete_Operator_Commands (DOC)	Opposite of AOC
- Delete_Operator_Profile (DOP)	Delete profile from profile database
- List_Operator_Profile (LOP)	Display profile(s)
- Move_Master_Status (MMS)	Reassign Master Status
- Write_Operator_Profile (WOP)	Save profile on to profile database

MANIPULATING PROFILES

The master creates and saves profiles by using the appropriate commands. Profiles are stored in a system file under control of the Unified Profile System (UPS); the file is a grow file and has the capacity for hundred of profiles. the master uses profiles to give or change console permissions.

MASTER CONSOLE (Cont'd.)

EXAMPLE

A console has just logged on by giving the correct password and its name is Fred:

```
???LOS -OS FRED

Name Device Status      Message_Classes_Assigned
Fred fnp active                 System Response
Verbs allowed are:              to LOS

ASQ,LOGOUT,SSM
```

Operator Inputs	Explanation
???AOC -ALL -OS FRED	Assign all operator commands to Fred
???DOC DUMP -OS FRED	Disallows system halt and dump
???DOC Change -OS FRED	Give Fred permission to receive job start message
???ASM EOJ -OS FRED	EOJ messages
???ASM ABT -OS FRED	Abort Messages
???WOP -OP Jobwatch -OS FRED	Save FRED's profile under the name Jobwatch
???LOP -OP Jobwatch	List profile whose name is Jobwatch

```
Disallowed verbs for Jobwatch:

Boot, Change, Dump
message classes allowed for
Jobwatch                        System Response to LOP
abt, eoj, srt
```

???AOP -OP Jobwatch -OS Susie	Assign profile, jobwatch to console, Susie

LOG-ON

SYSTEM ACCESS

The Terminal Operator will access the system in the same manner as for Time Sharing which normally entails a dial-up, giving a password, a program name, for the Console Manager, the station is assigned the default profile containing minimum capabilities; furthermore, the Console Manager relays a message to the Master Console stating that a new console of such-and-such name has come on-line. At this point, the Console Manager finished its part of the log-on and validation process and it is up to the new Console Operator to carry on his activities which might include conversing with the Master to acquire further privileges, etc.

LOG-ON

After Dial-up, the console would be prompted with:

    Mailbox Name --

Station responds with:

    $Console or CONSOLE

If the Console Manager is in execution, the station/terminal will be connected and will receive the message:

    Console is connected

If the Console Manager is not running, the console receives the message:

    Acceptor Mailbox unknown

Next, the operator will be prompted for the password with the message:

    Enter console password--

The password is typed in as a direct input. If the password is not correct, the message:

    Incorrect password

is typed, and the operator is prompted agian, up to a maximum of three tries, after which the terminal is disconnected. If the password is correct, the operator is then prompted for a console name with the message:

    >>>nn CONSOLE NAME?

The console name is a one to eight alphanumeric character name chosen at liberty by the operator. This query is read/write uncoupled the operator has to hit the break key and on getting ??? prompt answers with:

    ???ASQ nn <console name> (nn is the reply key)
        or just
    ??? <console name>

LOG-ON (Cont'd.)

Once this answer is accepted, the following message is displayed:

Welcome to the console network
You are now logged on. At this point the terminal is connected to the console workstation, but with limited capability. After the correct password is entered, the following message is sent to the Master Console:

ATTENTION, MASTER OPERATOR! a new console has logged on, named <console name>

The master operator may assign attributes to the new console, using assign_operator_profile (AOP), add_operator_command (AOC), delete operator_system_messages (DSM), and move_system_messages (MSM) commands for the new console to acquire further capabilities.

LOG-ON (Cont'd.)

LOG-ON EXAMPLE

(Some inputs are shown to be continued on next line due to space restriction. Inputs are all on one line.)

FNP CONSOLE LOG-ON	MASTER CONSOLE (Name is MAIN)
MAILBOX NAME--CONSOLE CONSOLE IS CONNECTED DIRECT INPUT IS REQUIRED AFTER FOLLOWING MESSAGE: Enter Console Password--WCLV	
>>>>33 Enter Console Name-- (see note below)	33 is reply key or message #
???33 NEWGUY	
	Attention, Master Operator! A new console has logged-on named NEWGUY ???SSM NEWGUY Give Name, and phone number.
Welcome to the CONSOLE NETWORK	
You are now logged on	
*Message from: MAIN Give name and phone number (see note below)	
???SSM -MAIN I'm JOHN DOE 555-1212	
*Message to MAIN accepted	*Message from NEWGUY: I'm JOHN DOE 555-1212 (see note below)
	??? AOP -OP TAPECONS -OS NEWGUY

NEWGUY is now a console with the attributes of profile TAPECONS.

NOTE: Because the READ is uncoupled from the WRITE in a WRITE/READ request, the operator must hit the "BREAK" or "REQUEST" key when he is ready to enter a response. In this example, a "BREAK" or "REQUEST" key was used four times - before each "???" system prompt.

EXCEPTION MANAGEMENT

HARDWARE FAILURES

The phrase "attributes are reassigned" is used in the following scenario. This means moving all uniquely assigned output message types and privileges of the failing console to the selected replacement console. When this happens, an informative message is printed on the master console and any backup traffic is issued to the replacement console.

IOM CONSOLE FAILURE

This pertains to non-DPS 88 systems. If the failing console is not the master, its attributes are reassigned to the master console. If the failing console is the master console, and more than one IOM console is configured, the console on the lowest channel number is queried, working upward until all possibilities are exhausted. If successful, the failing master console's attributes are reassigned to the replacement.

If no IOM console is found, the Console Manager will abort. The system will continue attempting to locate an IOM console until console intervention is required. At that point, the system will hang, requiring a reboot.

FNP CONSOLE FAILURE

If the failing FNP console is not the master, its attributes are reassigned to the master console. If the failing FNP is the master, and IOM consoles are configured, the console on the lowest IOM channel is queried, working upward until all possibilities are exhausted. If successful, the failing consoles attributes are reassigned to the replacement.

If no IOM Console is found, the Console Manager will abort. The system will continue attempting to locate an IOM console until console intervention is required. At that point, the system will hand, requiring a reboot.

SSF EMULATOR CONSOLE FAILURE

This pertains to DPS 88 systems only. If the Emulator Console fails, the scenario is similar to that of a failing IOM console.

EXCEPTION MANAGEMENT (Cont'd.)

DISK FAILURE

Normally, disk errors create no problem for console software, unless the error itself somehow prevents the software from notifying the operator of its occurrence or prevents the operator from responding to it. To eliminate the possibility of this happening, certain console messages bypass the Console Manager Software. For example, a GEPR message reporting a disk error while trying to page in a portion of the Console Manager will be issued by GCOS 8 directly. The message will not be write/read uncoupled, journaled, or routed according to the current console configuration. It will be routed according to the default configuration specified in the Startup job stream.

SOFTWARE FAILURE

If the Console Manager aborts, operator intervention is required to restart it. If the Console Manager is to be aborted by the operator, certain precautions must be taken before doing so. A LIST_SYSTEM_QUERIES command should be entered at the console and all outstanding queries should be answered, if possible. Unanswered queries will be lost. Processes issuing them will hang and cannot be terminated. At this time, the only solution is to reboot the system and restart the Console Manager. If there are no outstanding queries, aborting the Console Manager may be done safely.

Following a console Manager interruption, only the basic configured console is available. After the Console Manager restarts, FNP consoles must log in again.

Journal files are saved across a boot, unless an initialize/edit is done or the files were deliberately released. There is no "memory" across a boot, otherwise.

Routing information, access levels, and message suppression information is lost. However, saved profiles are preserved and can be invoked by the ASSIGN_OPERATOR_PROFILE (AOP) command.

If the Unified Profile System (UPS) files were destroyed, they must be restored from the last system save tape. If this save is unavailable, all desired profiles, other than the system default profile, must be rebuild using the WRITE_OPERATOR_PROFILE command.

APPENDIX J

DPS8000

DPS 8000 SYSTEM OVERVIEW

PERFORMANCE CONSIDERATION

- INSTRUCTION PIPELINE PROCESSING ALLOWS A CENTRAL PROCESSOR TO PROCESS MORE THAN ONE INSTRUCTION AT A TIME.

- ASSOCIATIVE MEMORY FOR MOST RECENTLY REFERENCED PAGE TABLE WORI

- CACHE MEMORY (256 Kbytes) HIGH SPEED ACCESS TO MOST RECENTLY US INSTRUCTIONS AND DATA

- RELATIVE TO THE DPS 8/70 SINGLE PROCESSOR SYSTEM

  * THE DPS 8000/81 WAS MEASURED 1.2 TO 1.9 TIMES THE DPS 8/70 DEPENDING ON THE SOFTWARE ENVIRONMENT

    - COMMERCIAL BATCH
    - SCIENTIFIC/ENGINEERING
    - INTERACTIVE WORKLOADS (DMIV-TP, TSS, etc.)

- DPS 8000 PROVIDE UPGRADE PATH FOR CURRENT LEVEL 66 AND DPS 8 PRODUCT LINES.

DPS 8000 SYSTEM OVERVIEW

CONFIGURATION FLEXIBILITY

- DPS 8000/81 SINGLE SCU, SINGLE CPU, SINGLE IMX
  - * 16 PHYSICAL CHANNELS PER IMX (128 LOGICAL)
  - * MEMORY SIZES 4MW (16MB) TO 32MW (128MB)
    - o 4MW, or 8MW, or 16MW, or 32MW
- DPS 8000/82 (TANDEM) TWO SCUs, TWO CPUs, TWO IMXs
  - * 16 PHYSICAL CHANNELS PER IMX (128 LOGICAL)
  - * MEMORY SIZES 2x(4MW (16MB) TO 32MW (128MB)) 8MW TO 64MW
    - o 4MW, or 8MW, or 16MW, or 32MW EACH SCU 64MW TOTAL
- MSP3880 FIPS DISKS SUPPORTED
- MTS8200 FIPS TAPES SUPPORTED
- EMBEDDED UNIT RECORD PROCESSORS
- HYPERCHANNEL
- PPS
- MDS (SR3000)
- DBS

DPS 8000 SYSTEM OVERVIEW

CONFIGURATION FLEXIBILITY

DPS 8000/81 (CPS8681)

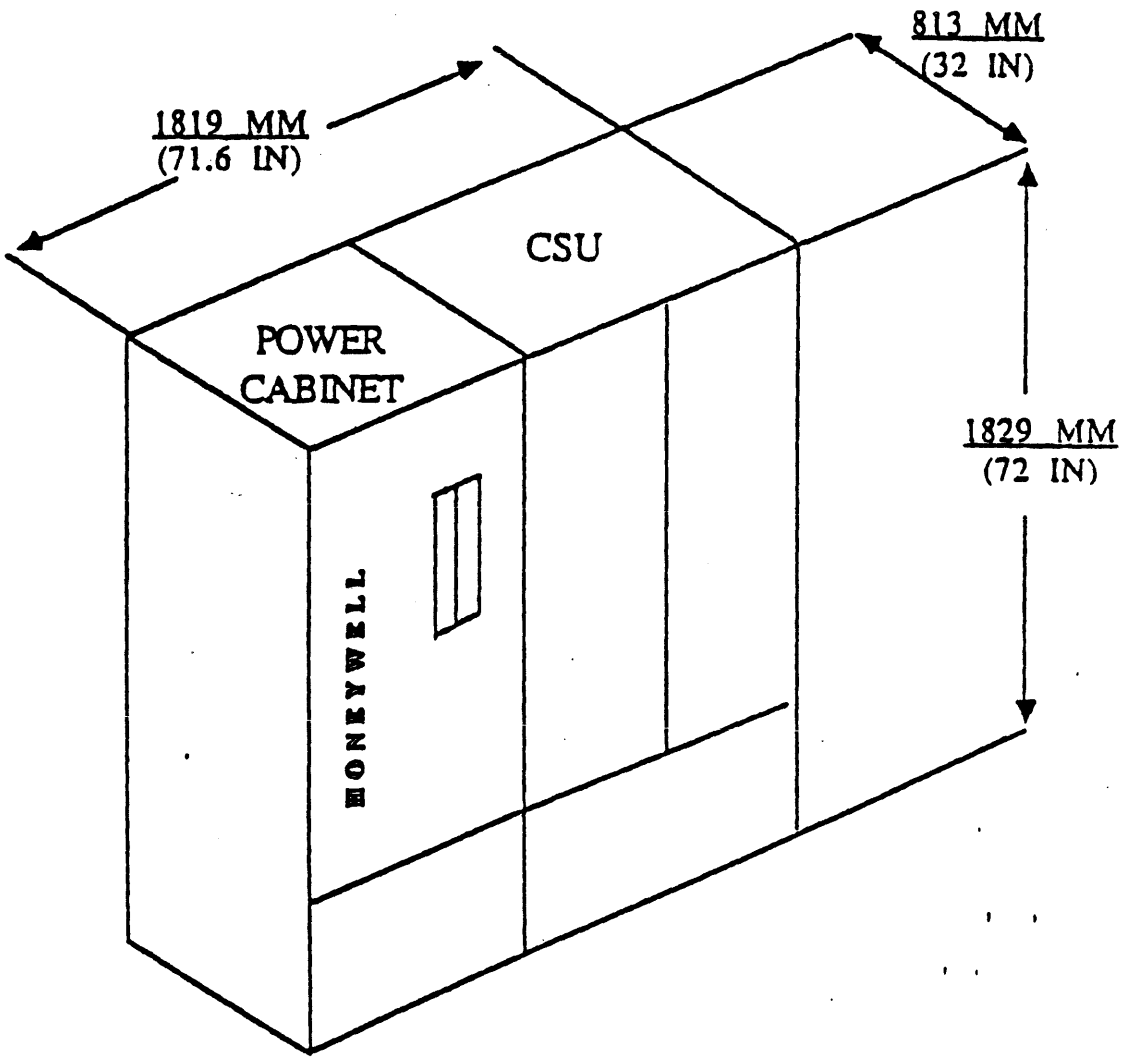

DPS 8000 SYSTEM OVERVIEW

CONFIGURATION FLEXIBILITY

DPS 8000/81 (CPS8681)

1 CENTRAL PROCESSOR UNIT (CPU)

1 SYSTEM CONTROL UNIT (SCU) WITH 4MW OF MEMORY

1 INFORMATION MULTIPLEXER WITH 16 PHYSICAL CHANNELS (128 LOGICAL)

CHANNEL 0 IS NOT USED
CHANNEL 3 IS RESERVED FOR MAINTENANCE

1 SYSTEM CONSOLE (MAX OF 4 PER IMX)

1 MODEM FOR REMOTE MAINTENANCE

REQUIRES:

1 ONE DEDICATED COMMUNICATION PHONE LINE FOR REMOTE MAINTENANCE

o THE DPS 8000/81 CAN BE UPGRADED TO DPS 8000/82

CABINET 0

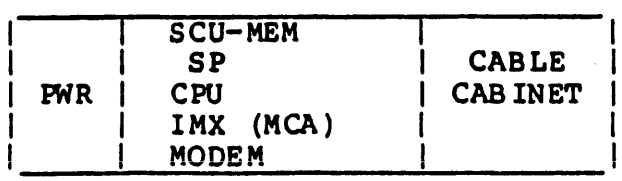

DPS 8000 SYSTEM OVERVIEW

CONFIGURATION FLEXIBILITY

DPS 8000/82 (CPS8682)

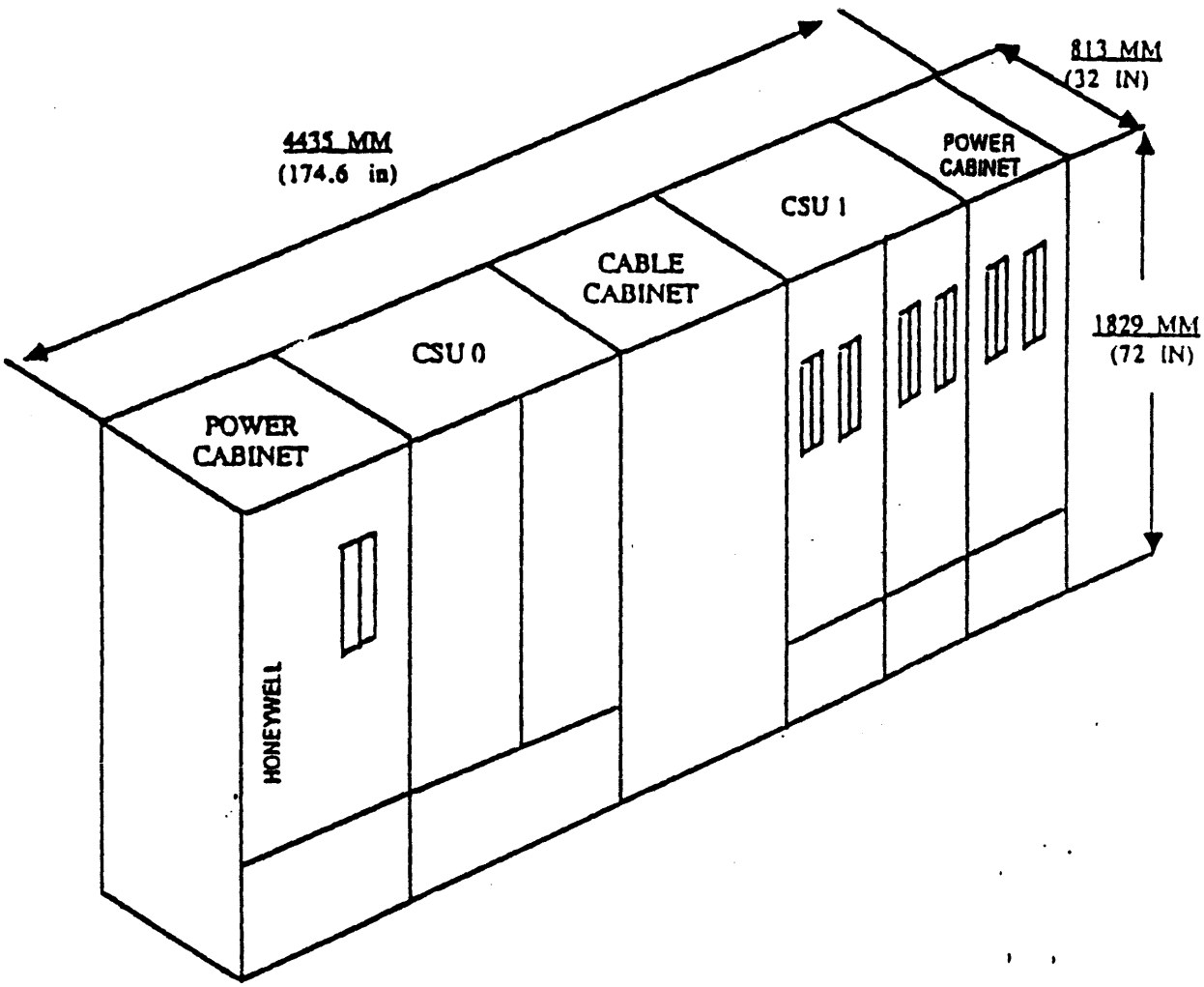

DPS 8000 SYSTEM OVERVIEW

CONFIGURATION FLEXIBILITY

DPS 8000/82 (CPS8682)

INCLUDES:

2 CENTRAL PROCESSOR UNIT (CPU)

2 SYSTEM CONTROL UNIT (SCU) WITH 4MW OF MEMORY EACH SCU

2 INFORMATION MULTIPLEXER WITH 16 PHYSICAL CHANNELS (128 LOGICAL)

CHANNEL 0 IS NOT USED
CHANNEL 3 IS RESERVED FOR MAINTENANCE

2 SYSTEM CONSOLE (MAX OF 4 PER IMX)

2 MODEMS FOR REMOTE MAINTENANCE

REQUIRES:

1 DEDICATED COMMUNICATION PHONE LINE

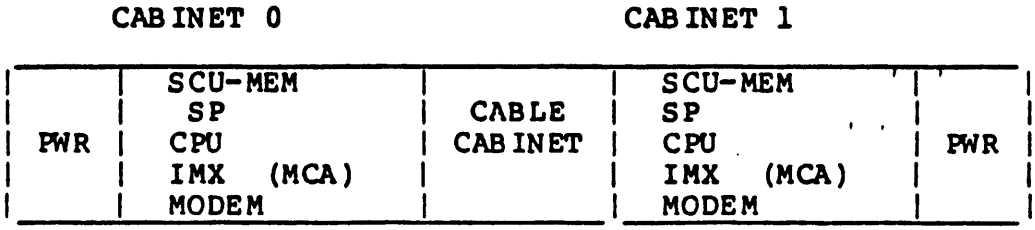

DPS 8000 SYSTEM OVERVIEW

ADVANCED TECHNOLOGY

- O USES ADVANCED CIRCUIT TECHNOLOGY FEATURING VERY LARGE SCALE INTEGRATION (VLSI)

- O CIRCUIT BOARDS 17.1 INCHES WIDE BY 14.4 INCHES LONG PROVIDING CONNECTIONS FOR:

- O UP TO 30 AIR-COOLED MULTILAYERED SINGLE CHIP PACKAGE (SCP) PER CIRCUIT BOARD WHICH CONTAIN:

  - * GATE-ARRAY CHIPS

    - o 1500 HIGH-PERFORMANCE GATES

    - o VLSI GATE-ARRAY CHIPS ARE USED IN THE CPUs AND SCUs

  - * CURRENT MODE LOGIC

    - o A STEADY STREAM OF CURRENT, RATHER THAN FLUCTUATING VOLTAGES, PROVIDING HIGH-SPEED SWITCHING

- O A CPU IS CONTAINED ON TEN UNITS

- O AN SCU/PORTS IS CONTAINED ON 3 TO 6 UNITS

- O MEMORY IS CONFIGURED TO 4 MEGAWORDS PER UNIT

- O FAULTY UNITS CAN BE QUICKLY IDENTIFIED AND REPLACED

- O 1MEGA BIT METAL OXIDE SEMICONDUCTOR (MOS) MEMORY CHIPS

DPS 8000 SYSTEM OVERVIEW

RELIABILITY/AVAILABILITY/SERVICEABILITY

- VERY LARGE SCALE INTEGRATION CIRCUITS WITH SINGLE CHIP PACKAGE (SCP)

- VLSI MINIMIZES COMPONENT CONNECTIONS

- AUTOMATIC ERROR DETECTION AND CORRECTION (EDAC) FOR MOS

- ENHANCED ON-LINE BACKGROUND TESTS BY PATROL (Processor Automatic Test Routine On-Line)

  * PATROL IS AN ON-LINE OPERATION (IN EACH CPU) IN WHICH TEST PROGRAMS ARE RUN DURING IDLE STATES OR GCOS WILL CAUSE TO RUN EVERY 5 SECONDS BY EXECUTING THE RPAT INSTRUCTION.

    - THE PATROL TEST PROVIDES AN INTEGRITY CHECK ON CPU OPERATIONS, AND, WITH SITE OR TAC INTERVENTION, CAN PROVIDE TEST FAILURE INFORMATION WHICH ,WHEN ADDED TO OTHER COLLECTED ERROR INFORMATION, WILL AID IN FAILURE DIAGNOSIS.

    - ERRORS DETECTED BY PATROL ARE REPORTED TO THE CONSOLE BY THE MAINTENANCE SUBSYSTEM AND RECORDED IN THE SP JOURNAL LOG

- NATIVE FAULT TESTS (NFTs)

  * TEST CPUs, SCUs, AND IMXs

- SYSTEM SPLIT/MERGE

- MAINTENANCE SUBSYSTEM

  * MICROPROCESSOR-BASED SERVICE PROCESSOR (SP)

    MAINTENANCE AND SUPPORT FUNCTIONS FOR THE CPU AND SCU

  * MAINTENANCE CHANNEL ADAPTER (MCA) (CONTROLLED BY SP)

    MAINTENANCE AND SUPPORT FUNCTIONS FOR THE IMX

DPS 8000 SYSTEM OVERVIEW

SOFTWARE

- DPS 8000 SYSTEMS ARE SUPPORTED BY A SPECIFIC COPY OF THE GCOS 8 OPERATING SYSTEM
  - * INITIALLY, SR2500 UPDATE 6
  - * EVENTUALLY, SR3000
- THE FOLLOWING SOFTWARE IS RECOMMENDED FOR ALL DPS 8000 SYSTEMS
  - * GCOS 8 OS BASIC SYSTEM
    - o GCOS 8 NUCLEUS FOR INITIALIZATION AND CONFIGURATION
  - * GCOS 8 OPERATING EXECUTIVE
    - o PROVIDES ENVIRONMENT AND SERVICES FOR OTHER GCOS 8 PRODUCTS SUCH AS:

      File Management Supervisor (FMS)
      System Scheduling
      Data Management-IV (DM-IV)
      Unified File Access System (UFAS)
      Resource Allocation
      Memory Management
      Rapid Access Data System (RADS)
        Software Disk Cache
      Console Manager
        System Console flexibility and security
      Console Journal
        Journalize console traffic to disk for later recall

DPS 8000 HARDWARE COMPONENT DESCRIPTIONS

DPS 8000 INFORMATION PROCESSING SYSTEM

- DPS 8000 INFORMATION PROCESSING SYSTEM (1)
- SYSTEM CONSOLE (2)
- CENTRAL SYSTEM UNIT (CSU) (3)
- CABINET POWER (4)

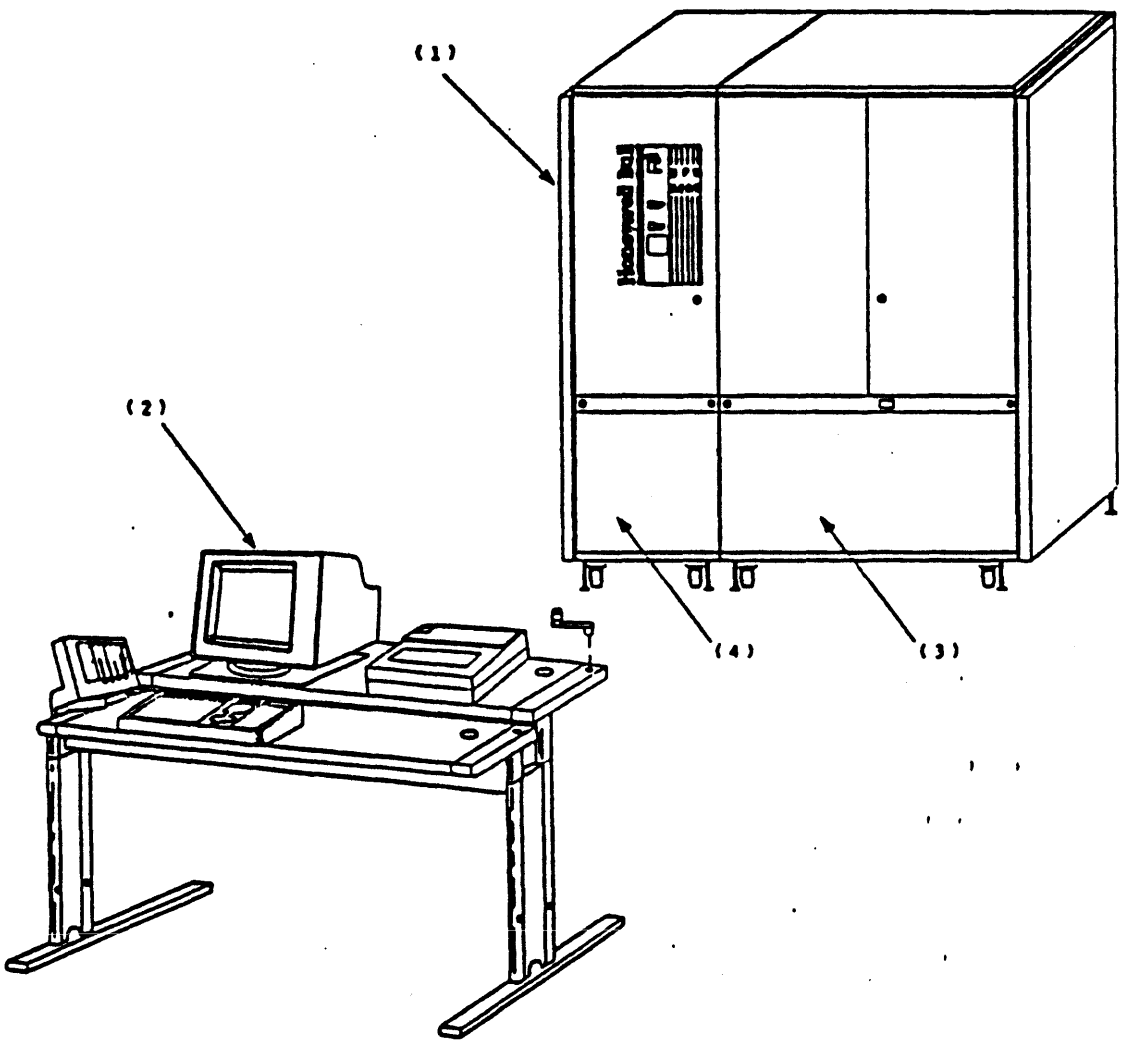

DPS 8000 HARDWARE COMPONENT DESCRIPTIONS

SYSTEM CONSOLE AND OPTIONS

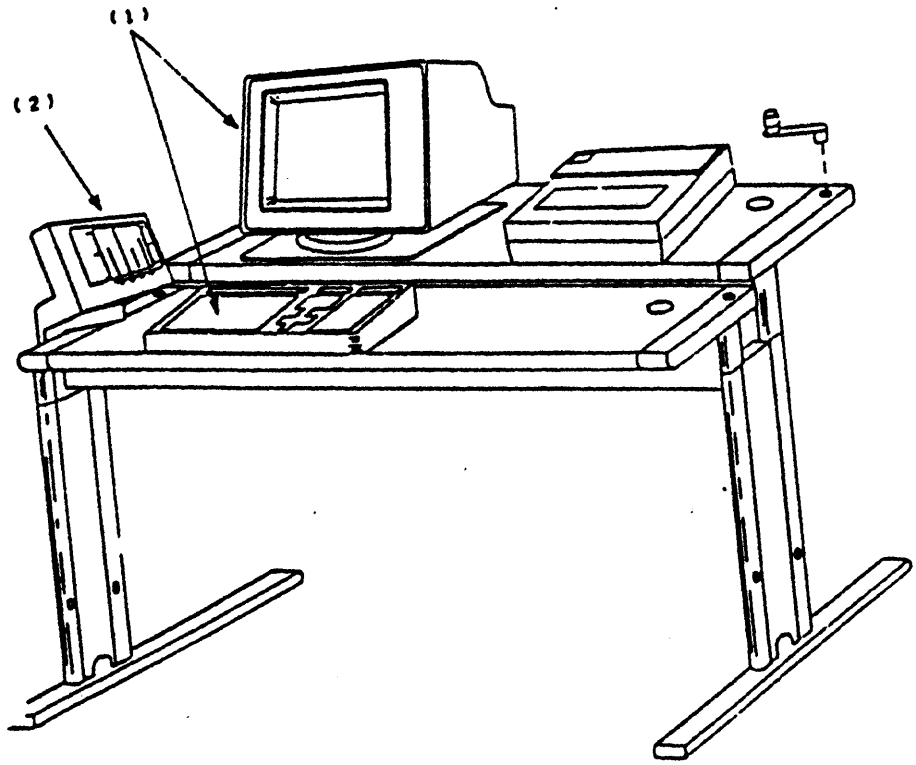

DPS 8000 HARDWARE COMPONENT DESCRIPTIONS

SYSTEM CONSOLE AND OPTIONS

- ENABLE OPERATOR TO CONTROL AND INTERACT WITH THE TOTAL DPS 8000 SYSTEM
  - * CONSISTS OF AN IMX CONSOLE CHANNEL CONNECTION:
  - * A 14 INCH DISPLAY STATION WITH KEYBOARD:
  - * A CONSOLE TABLE WITH SYSTEM CONTROL POD:
  - * AND AN OPTIONAL 100 CHARACTER PER SECOND PRINTER (FOR HARDCOPY)
  - * THREE ADDITIONAL CONSOLES CAN BE CONFIGURED (4 MAXIMUM PER IMX)
- VIDEO DISPLAY UNIT AND KEYBOARD (1)
  - * MAIN ELEMENT OF OPERATOR COMMUNICATION TO THE SYSTEM
- SYSTEM ACTIVITY MONITOR (SAM) (2)
  - * VISUAL INDICATION OF PERCENT OF CPU USAGE

POWER CABINET

POWER CABINET (FRONT)

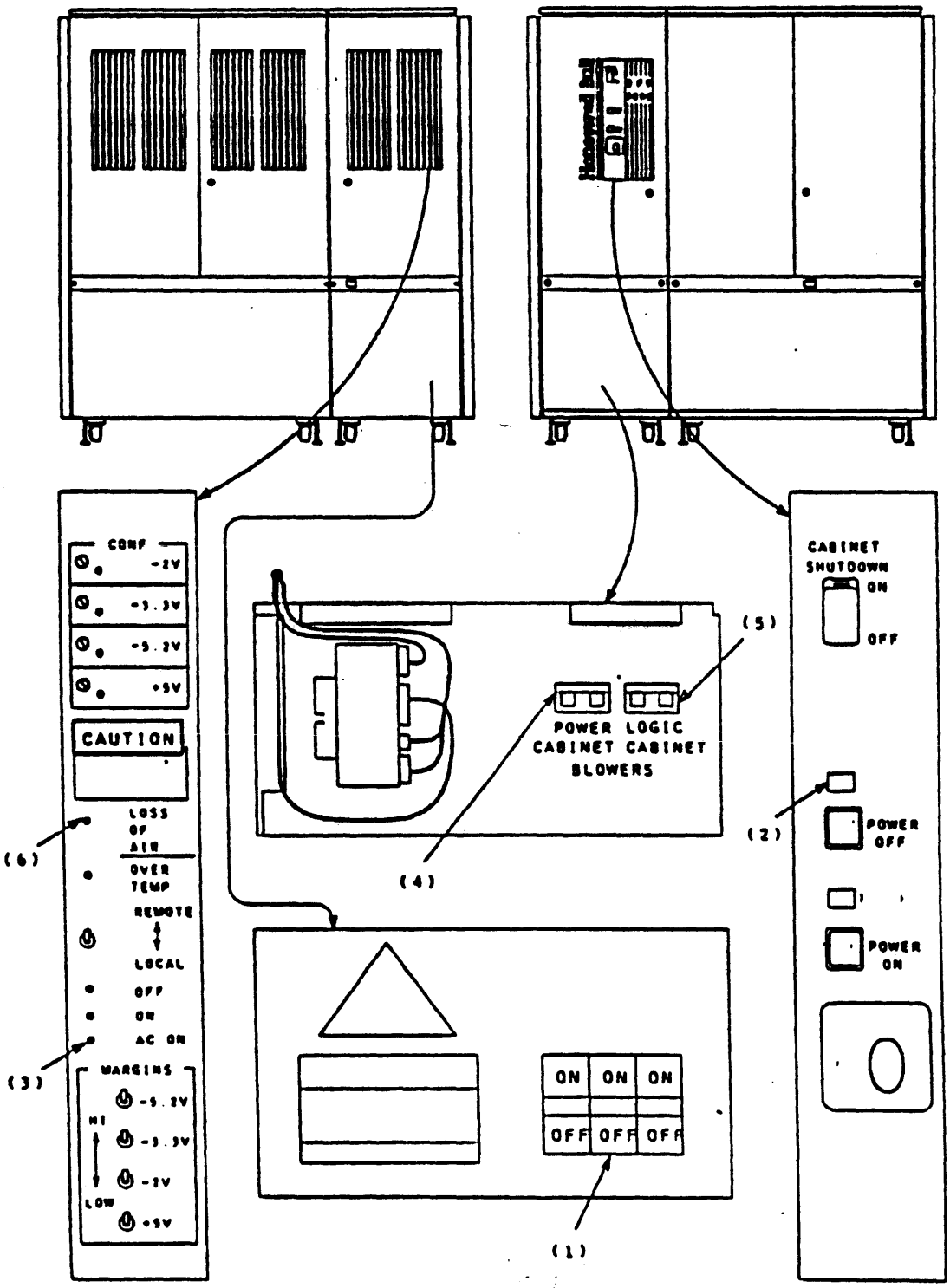

DPS 8000 HARDWARE COMPONENT DESCRIPTIONS

POWER CABINET

POWER CABINET (FRONT)

- CONTAINS THE OPERATORS PANEL, FOR APPLYING AND REMOVING POWER TO THE FRAME
  - * THE CABINET SHUTDOWN SWITCH MAY BE USED TO DO CABINET EMERGENCY SHUTDOWN
    - o FOR SITE EMERGENCY SHUTDOWN, THE SITE MAY BE EQUIPPED WITH AN EMERGENCY POWER-OFF SYSTEM LOCATED AT THE PRINCIPLE DOORS.
    - o POWER MAY ALSO BE REMOVED USING THE MAIN BREAKER LOCATED IN THE CIRCUIT BREAKER LOAD CENTER PANEL.
  - * THE POWER ON AND POWER OFF SWITCHES ARE NORMALLY USED TO CONTROL UNIT POWER
- THE MAIN SUPPLY CIRCUIT BREAKER (1)
  - * NORMALLY ONLY ACCESSIBLE TO SERVICE PERSONNEL
  - * WHEN ON, THE AMBER POWER OFF (2) AND AC ON (3) INDICATORS WILL BE ON
- THE BLOWER CIRCUIT BREAKERS (4,5)
  - * NORMALLY ONLY ACCESSIBLE TO SERVICE PERSONNEL
  - * WHEN ON, AND THE POWER ON INDICATOR IS ON, THE LOSS OF AIR INDICATOR (6) SHOULD BE OFF,.

DPS 8000 HARDWARE COMPONENT DESCRIPTIONS

POWER CABINET

POWER CABINET (REAR)

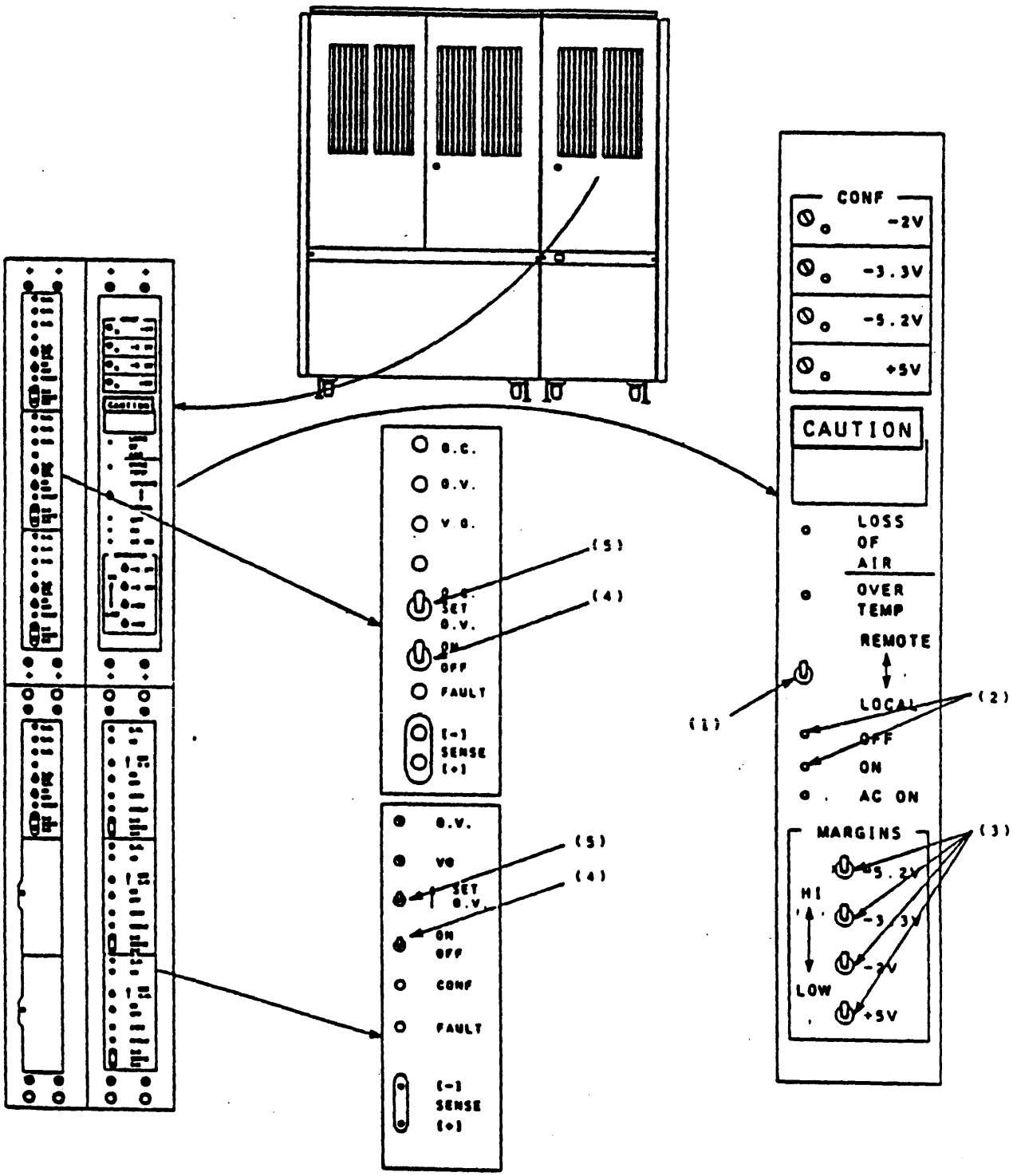

DPS 8000 HARDWARE COMPONENT DESCRIPTIONS

POWER CABINET

POWER CABINET (REAR)

- INDICATOR PANEL

  * THE LOCAL-REMOTE SWITCH (1) IS USED BY SERVICE PERSONNEL TO ACTIVATE EITHER THE POWER ON/OFF SWITCHES OR THE ON/OFF PUSH BUTTONS (2). WHEN IN THE REMOTE POSITION, THE POWER ON/OFF SWITCHES ARE ACTIVE

  * THE HI-LOW MARGINS SWITCHES (3) ARE USED BY SERVICE PERSONNEL TO MARGIN VOLTAGE LEVELS FOR TEST PURPOSES. THE SWITCHES ARE NORMALLY IN THE CENTER (OFF) POSITION

  * POWER REGULATOR ON-OFF (4) (NORMALLY ON) IS USED BY SERVICE PERSONNEL FOR MAINTENANCE.

  * THE POWER REGULATOR SET O.V./O.C. SWITCH (5) (NORMALLY IN THE CENTER (SET) POSITION) ARE USED BY SERVICE PERSONNEL FOR MAINTENANCE PURPOSES

  * OVER TEMP INDICATES OVERHEATING

  * FAULT INDICATE A FAULT IN THE REGULATOR CONTROL MODULE (POWER)

DPS 8000 HARDWARE COMPONENT DESCRIPTIONS

CENTRAL SYSTEM UNIT (CSU)

LOGIC CABINET

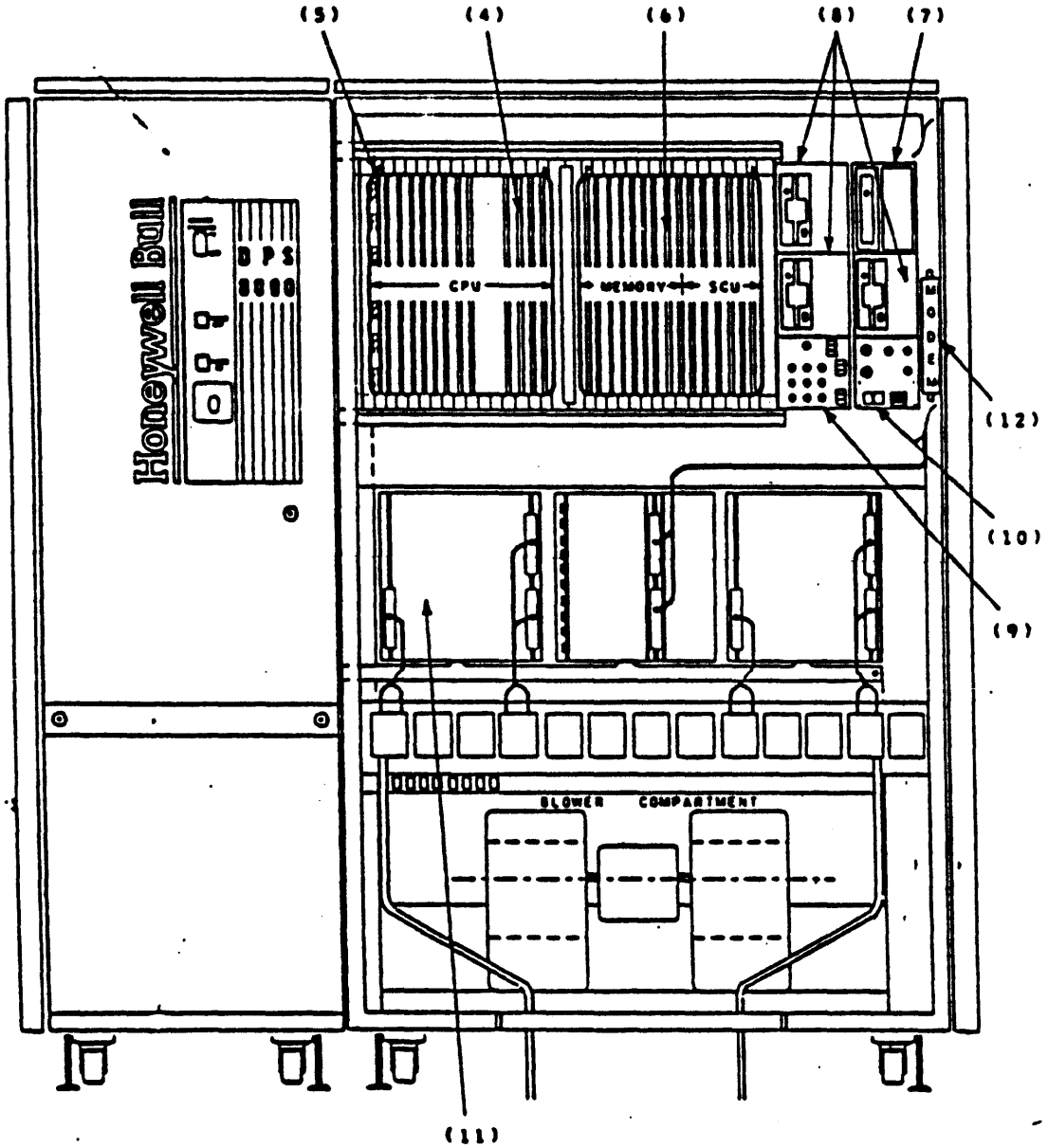

DPS 8000 HARDWARE COMPONENT DESCRIPTIONS

CENTRAL SYSTEM UNIT (CSU)

LOGIC CABINET

- CONTAINS THE SYSTEM CONTROL UNIT/MAIN MEMORY (SCU/MM) (6). THE SC IS THE INTERFACE BETWEEN ALL CENTRAL SYSTEM COMPONENTS, INCLUDINC MAIN MEMORY.

- THE CENTRAL PROCESSING UNIT (CPU) (4) WHICH EXECUTES THE INFORMATION PROCESSING INSTRUCTIONS OBTAINED FROM MEMORY.

- BELOW THE CPU AND THE SCU/MM IS THE INFORMATION MULTIPLEXER (IMX) (11) WHICH PROVIDES THE INTERFACE AND COORDINATION OF I/O TO PERIPHERAL DEVICES, FRONT-END NETWORK PROCESSORS

- THE SERVICE PROCESSOR (SP) (5) WHICH PROVIDES HARDWARE INITIALIZATION, FIRMWARE LOADING, CPU AND SCU/MM CONFIGURATION, CPU AND SCU TESTING, AND SYSTEM BOOTLOADING.

- THE SPs WINCHESTER DISK DRIVE (7), AND DISKETTE DRIVE (8) WHICH WILL HOLD THE SP PROGRAM, SCU CONFIGURATION FILES, CPU FIRMWARE, AND CPU TEST PAGES.

- THE SP CONTROL PANEL (10) USED TO CONTROL CERTAIN SP FUNCTIONALITY

- THE MAINTENANCE CHANNEL ADAPTER (11) (MCA) (1 PER IMX) WHICH PROVIDES HARDWARE INITIALIZATION, FIRMWARE LOADING, IMX CONFIGURATION, AND IMX TESTING

- THE MAINTENANCE CHANNEL ADAPTER (MCA)s DISKETTE DRIVES (8) WHICH WILL HOLD THE MCA PROGRAM, IMX CONFIGURATION FILES, IPC FIRMWARE, AND IMX TEST PAGES

- THE CPU AND MCA CONTROL PANEL (9) USED TO CONTROL CERTAIN MCA FUNCTIONS.

- TO THE RIGHT OF THE SCU/MEM IS A RMI MODEM (12) USED FOR REMOTE MAINTENANCE INTERFACE

DPS 8000 HARDWARE COMPONENT DESCRIPTIONS

CENTRAL SYSTEM UNIT (CSU)

LOGIC CABINET

SERVICE PROCESSOR PANEL

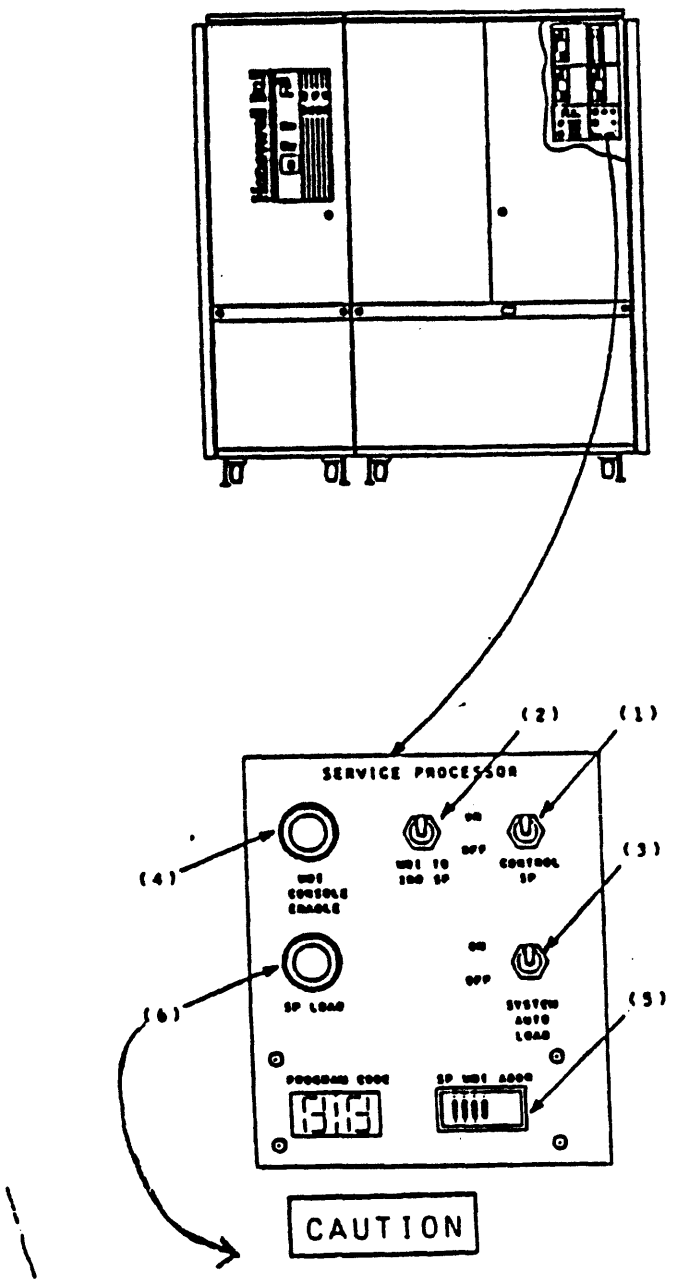

DO NOT PRESS BUTTON WHEN WINCHESTER DISK IS ACTIVE - DRIVE LIGHT ON. CHANGES TO DATA ON DISK MAY OCCUR.

DPS 8000 HARDWARE COMPONENT DESCRIPTIONS

CENTRAL SYSTEM UNIT (CSU)

LOGIC CABINET

SERVICE PROCESSOR PANEL

- CONTROL SP SWITCH (1) WHEN IN THE ON POSITION, INDICATES THAT THI SERVICE PROCESSOR IS A CONTROL SERVICE PROCESSOR (CSP). THIS SWITCH IS LOOKED AT AFTER PUSHING THE SP LOAD BUTTON.

  * THERE CAN BE ONLY ONE CSP FOR EACH OPERATING SYSTEM

- MDI TO 2ND SP SWITCH (2) IS USED TO ENABLE/DISABLE THE MULTI-DROP INTERFACE (MDI) TO THE OTHER CABINET (CABINET 0 OR 1)

  * USED IN A TANDEM, TO TIE THE MAINTENANCE SUBSYSTEM TOGETHER

- SYSTEM AUTO LOAD SWITCH (3), WHEN IN ITS NORMALLY ON POSITION IN THE CSP, THAT CSP WILL CAUSE THE CPU[s] AND SCU[s] TO LOAD FIRMWAR AND SCU CONFIGURATION INFORMATION AT CABINET POWER UP.

- MDI CONSOLE ENABLE BUTTON (4). IF THE OPERATING SYSTEM LEAVES THE MDI LOCKED, THIS BUTTON WILL 'UNLOCK' THE MDI, ALLOWING THE SP TO ACCEPT MAINTENANCE COMMANDS FROM THE SYSTEM CONSOLE.

- SP MDI ADDR SWITCHES (5) ARE USED TO DESIGNATE THIS SERVICES PROCESSORS MDI ADDRESS. THIS ADDRESS IS SET BY CSD.

- SP LOAD SWITCH (6) WHEN DEPRESSED WILL CAUSE A HARDWARE RESET AND A SOFTWARE RELOAD TO THAT SERVICE PROCESSOR FROM THE WINCHESTER OR THE DISKETTE IF READY

- PROGRAM CODE IS TWO HEXADECIMAL INDICATORS USED TO DISPLAY FAILING TEST NUMBERS IN BY THE SERVICE PROCESSOR SELF TEST (A DISPLAY OTHE THAN 00 INDICATES AN ERROR)

DPS 8000 HARDWARE COMPONENT DESCRIPTIONS

CENTRAL SYSTEM UNIT (CSU)

LOGIC CABINET

MAINTENANCE CHANNEL ADAPTER PANEL

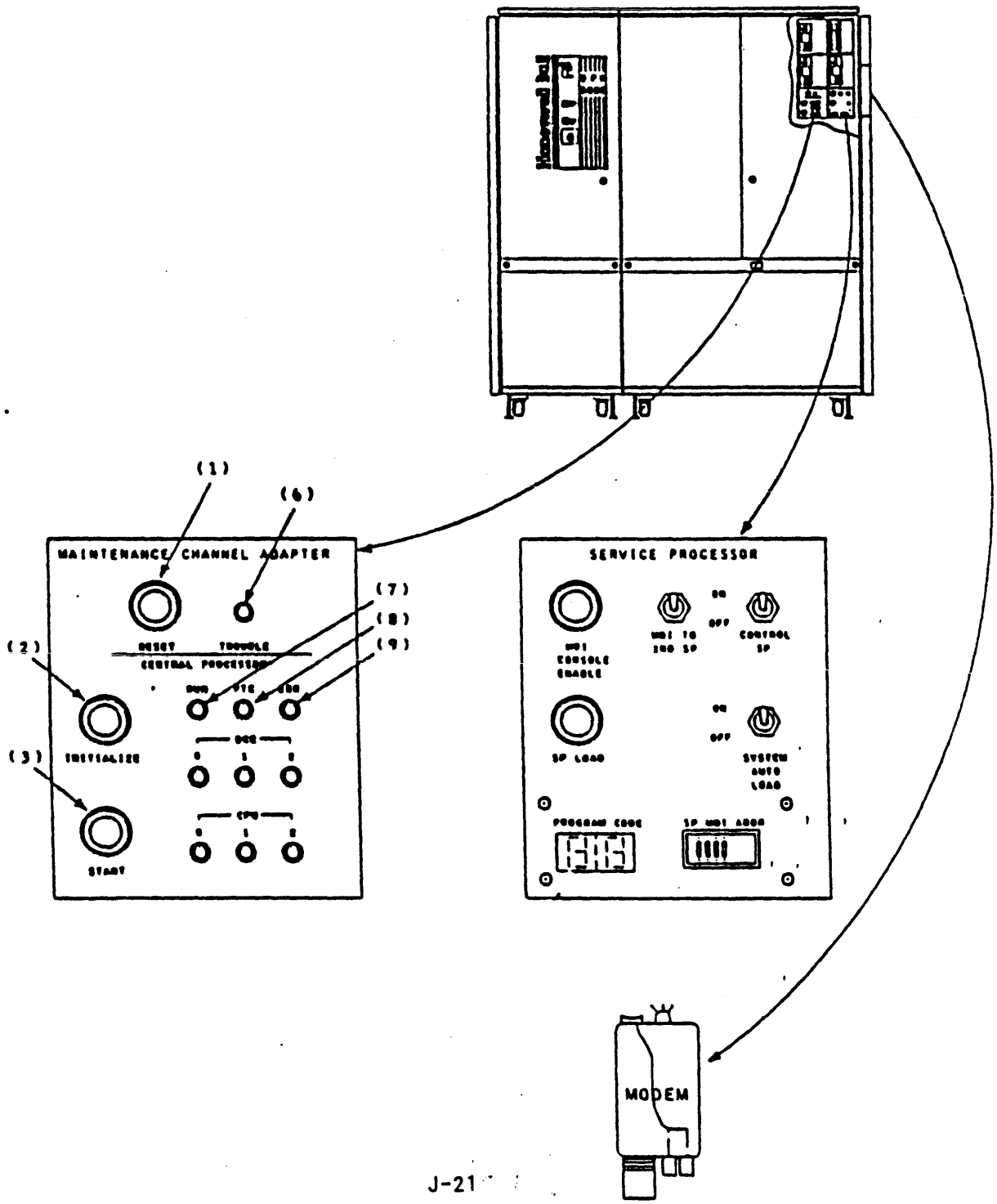

DPS 8000 HARDWARE COMPONENT DESCRIPTIONS

CENTRAL SYSTEM UNIT (CSU)

LOGIC CABINET

MAINTENANCE CHANNEL ADAPTER PANEL

- RESET SWITCH (1) RESETS THE MCA AND RELOADS THE MCA FIRMWARE FROM THE MCA DISKETTE
- TROUBLE INDICATOR (6) WILL LIGHT IF AN MCA PROBLEM HAS BEEN DETECTED

CENTRAL PROCESSOR PANEL

- INITIALIZE SWITCH (2) HALTS AND RESETS THIS CABINETS CPU
- START SWITCH (3) STARTS THE CPU ACCORDING TO THE START CONDITIONS IN THE RTM REGISTER
- RUN INDICATOR (7) WILL LIGHT IF CPU FIRMWARE IS RUNNING
- PTC INDICATOR (8) WILL LIGHT IF A CPU MEMORY PORT CYCLE IS ACTIVE
- ERR INDICATOR (9) WILL LIGHT IF AN ERROR CONDITION IS DETECTED IN THE CPU
- DCC 0-2 INDICATORS - DISPLAY OF THE DIAGNOSTIC CONTROL COUNTER
- CPU 0-2 INDICATORS - DISPLAY OF THE CPU NUMBER REGISTER

DPS 8000 HARDWARE COMPONENT DESCRIPTIONS

CENTRAL SYSTEM UNIT (CSU)

LOGIC CABINET

WINCHESTER, DISKETTE, and MODEM

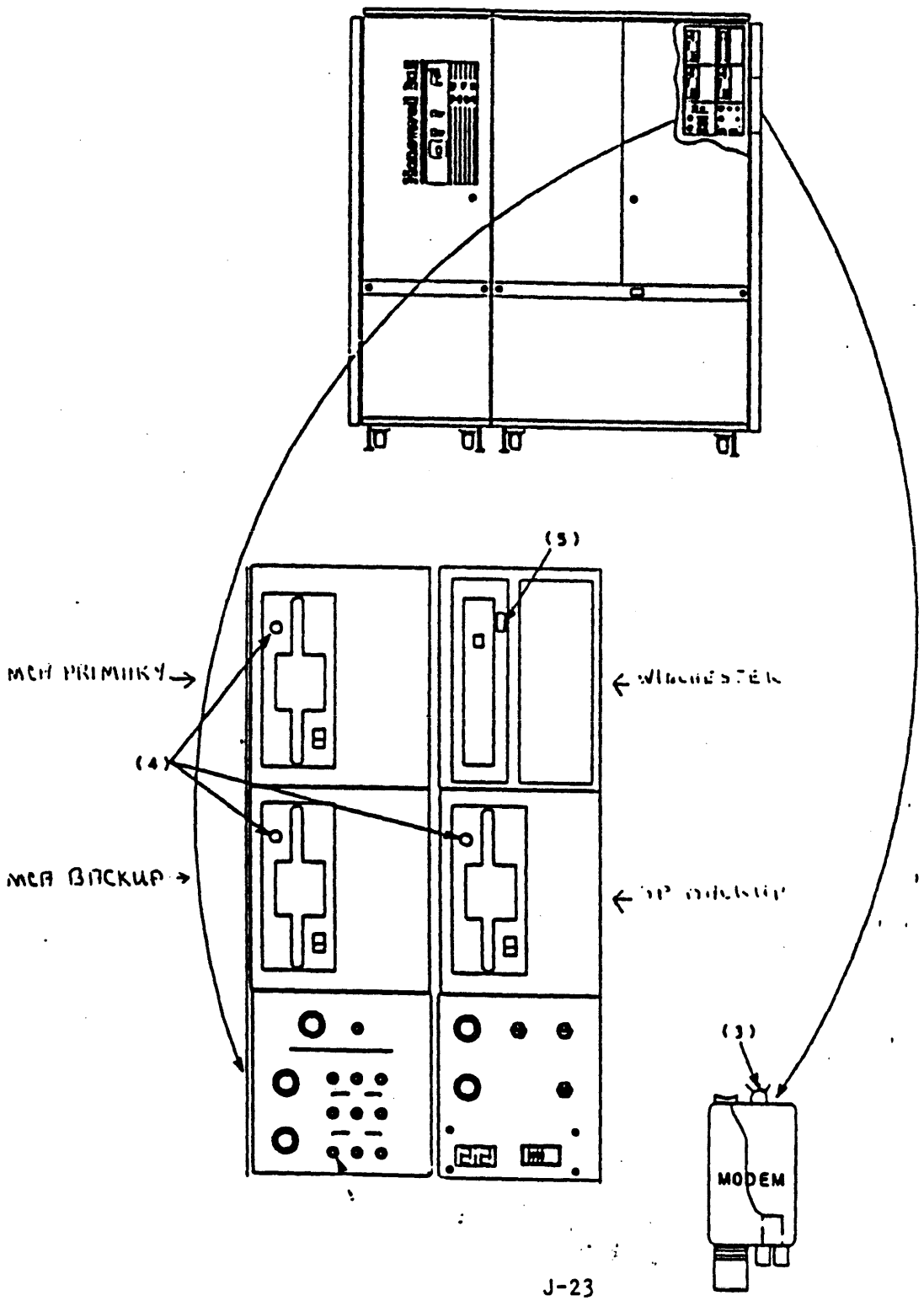

DPS 8000 HARDWARE COMPONENT DESCRIPTIONS

CENTRAL SYSTEM UNIT (CSU)

LOGIC CABINET

WINCHESTER, DISKETTE, and MODEM

- DISKETTE INDICATORS (4) WILL BE ON WHEN THE DISKETTE IS SELECTED
  - * 5.25 INCH 640K BYTE FLOPPY
- WINCHESTER INDICATOR (5) WILL BE ON WHEN THE WINCHESTER IS SELECTED
  - * 5.25 INCH 28MB HARD DISK

! ! ! ! CAUTION ! ! ! !

DO NOT DEPRESS SP BUTTONS WHEN THE WINCHESTER DISK IS ACTIVE (DRIVE LIGHT ON). DATA ON THE DISK MAY BE DAMAGED

- MODEM INDICATOR (3) INDICATES:
  - * THE "OFF HOOK" (ACTIVE) STATE WHEN SWITCHED TO THE "DATA MODE"
  - * THIS MODEM IS BYPASSED WHEN THE MODEM SWITCH IS IN THE "TALK MODE"

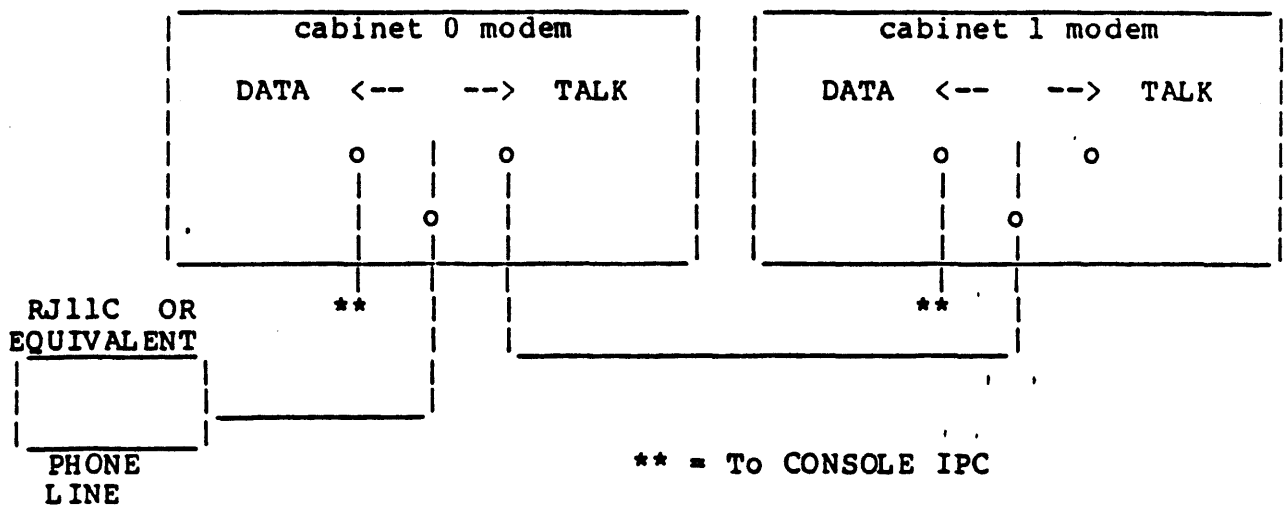

DPS 8000 HARDWARE COMPONENT DESCRIPTIONS

SYSTEM CONTROL UNIT (SCU) AND MAIN MEMORY

- MAXIMUM OF TWO SCUs PER DPS 8000
  - * PRIMARY INTERFACE BETWEEN CENTRAL SYSTEM COMPONENTS
  - * REGULATES CPU, IMX, AND MEMORY COMMUNICATIONS
  - * REGULATES DATA TRANSFERS BETWEEN CPU, MEMORY, IMX
  - * CONTROLS ALL SYSTEM INTERRUPT COMMUNICATIONS
  - * CONTROLS 8 PROCESSOR PORTS (0-7) FOR CPU AND IMX CONNECTIONS
    - o EVEN PORT NUMBERS FOR IMXs
    - o ODD PORT NUMBERS FOR CPUs
  - * EACH SCU CONFIGURATION IS DEFINED IN THE SERVICE PROCESSOR CONFIGURATION FILE
  - * EACH SCU CAN CONTROL UP TO 32 MEGAWORDS OF MEMORY

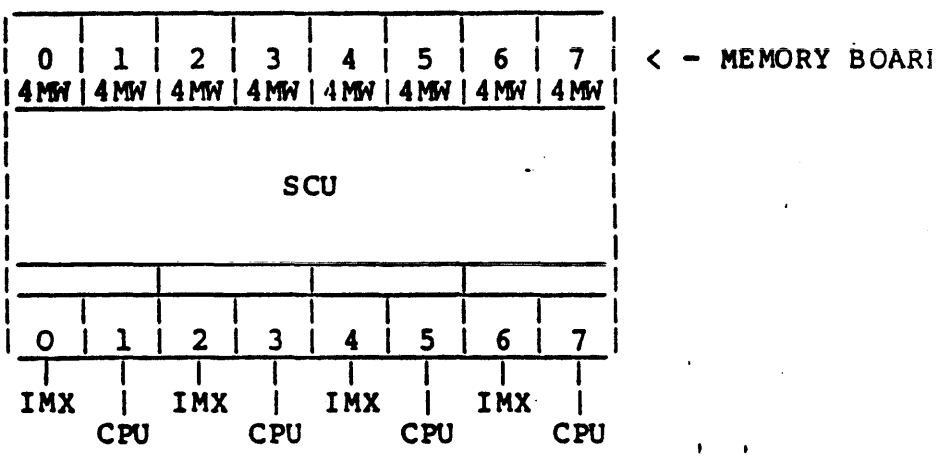

DPS 8000 HARDWARE COMPONENT DESCRIPTIONS

SYSTEM CONTROL UNIT (SCU) AND MAIN MEMORY

- TWO GROUPS OF MAIN MEMORY, EACH WITH A MAXIMUM OF 32 MW
  - * 1 MILLION BIT METAL-OXIDE SEMICONDUCTOR CHIPS
  - * 4 MILLION WORDS PER BOARD (1 unit)
  - * 8 MEMORY BOARDS PER SCU MEMORY (1, 2, 4, 8)
  - * 36 BIT WORDS
  - * AUTOMATIC ERROR DETECTION AND CORRECTION (EDAC)
  - * INTERNAL INTERLACE

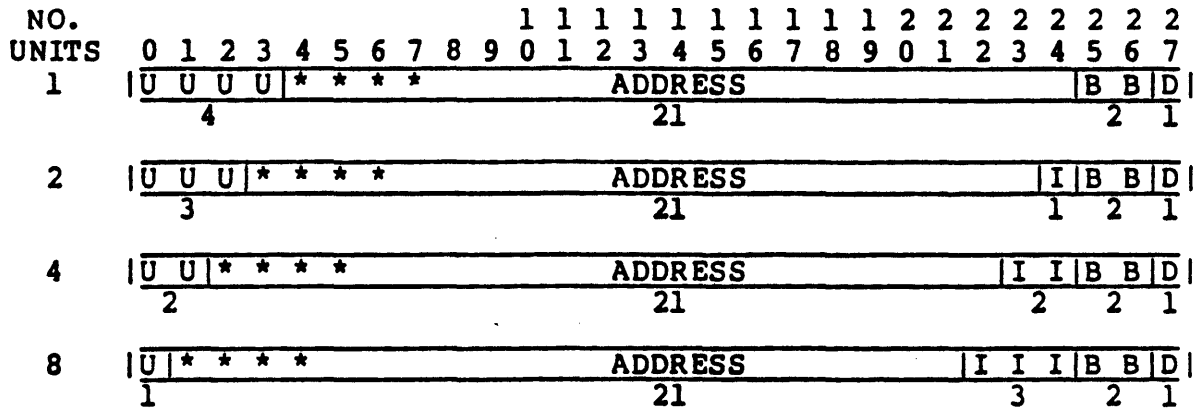

* - UNUSED BY MEMORY UNIT DEPENDING ON SIZE
U - UNUSED
I - INTERLACE BITS; USED FOR UNIT SELECT (2, 4, OR 8 WAY)
D - DOUBLE WORD BIT
B - EIGHT WORD BLOCK BIT
ADDRESS/B - ADDRESS BITS SENT TO SELECTED UNIT

- THE DPS 8000 MEMORY SUBSYSTEM IS COMPOSED OF A SYSTEM CONTROL UNIT (SCU) AND THE MEMORY CONTAINED IN IT
  - * SYNCHRONOUS INTERFACE WITH THE CPUs
  - * ASYNCHRONOUS INTERFACE WITH THE IMXs
  - * PROCESSES MULTIPLE CONCURRENT REQUESTS FOR MEMORY ACCESS AT EIGHT WORDS PER MEMORY FETCH

DPS 8000 HARDWARE COMPONENT DESCRIPTIONS

CENTRAL PROCESSING UNITS (CPUs)

- EXECUTES INSTRUCTIONS
  - * INSTRUCTION PIPELINE
  - * ASSOCIATIVE MEMORY FOR VIRTUAL TO REAL PAGE NUMBER CONVERSI
  - * CACHE MEMORY (256K BYTES) FOR INSTRUCTION AND DATA
  - * VIRTUAL MEMORY AND SECURITY (VM & S)
  - * TWO PORTS (A AND B) FOR CONNECTIONS TO THE SCU(s)
    - o THE A PORT GOES TO SAME FRAME SCU
    - o THE B PORT GOES TO THE OTHER SCU

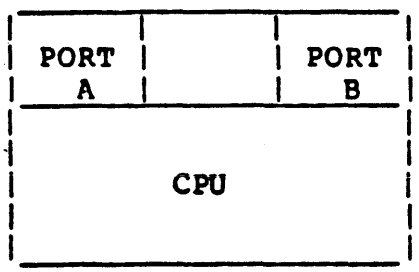

DPS 8000 HARDWARE COMPONENT DESCRIPTIONS

INFORMATION MULTIPLEXER (IMX)

- DATA TRANSFERS BETWEEN PERIPHERAL DEVICES OR COMMUNICATIONS LINES AND MAIN MEMORY ARE ROUTED THROUGH THE IMX
  - * THE IMX COORDINATES INPUT/OUTPUT OPERATIONS
  - * IT CAN HANDLE AN AGGREGATE OF UP TO 17.8 MILLION BYTES OF DATA PER SECOND
  - * CONCURRENT INPUT/OUTPUT OPERATIONS
  - * UP TO 16 PHYSICAL CHANNELS PER IMX (UP TO 128 LOGICAL CHANNEL NUMBERS PER IMX)
    - o INTEGRATED PERIPHERAL CONTROLLER (IPC)

PSIA	(4 TRIP/SLOW) (NOT SUPPORTED)
PSIA	(2 TRIP/FAST)
UNIT RECORD	(DAI PARALLEL)
UNIT RECORD	(PDSI/SERIAL)
CONSOLE	
DATANET	(DIRECT CHANNEL) / PPS
FIPS	(MSP/MTP) - DBS
IPI	MDS (RPQ)

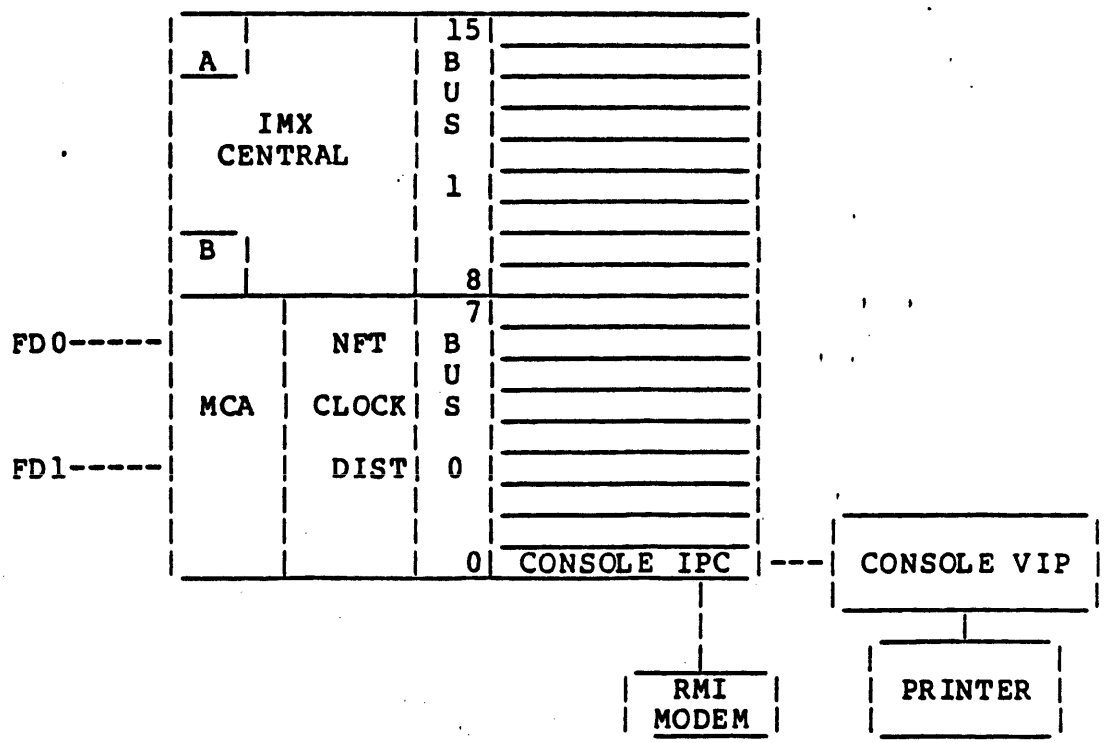

INFORMATION MULTIPLEXER (IMX)

- THE PHYSICAL CHANNEL NUMBER DETERMINES THE PRIORITY OF THE IPC THE IMX BUS.
  - * THE IMX ALTERNATES SERVICES BETWEEN THE BUS 0 AND BUS 1.
  - * WITHIN A BUS THE SERVICE PRIORITY IS ACCORDING TO THE PHYSI CHANNEL NUMBER
    - o CHANNELS 0 AND 8 ARE HIGHEST PRIORITY, 7 AND 15 ARE THE LOWEST.
  - * CHANNEL PRIORITIES

    0 8 1 9 2 10 3 11 4 12 5 13 6 14 7 15
    H
- THE FOLLOWING CHART GIVES A SUBSYSTEMS REQUIRED PRIORITY POSIT WITHIN A PRIORITY SCHEME.

Peripheral Type	Channel Type	Suppor
System Consoles	Cons IPC → Yes →	
Non Buffered MTP06xx GCR 200ips tapes	PSIA	RPQ or
Non buffered MSP06xx 451/50x disks	PSIA	RPQ or
Non buffered MTP06xx tapes except GCR-200	PSIA	RPQ or
Communications FNPs	NDIC → Yes →	
Page Printer Subsystems	NDIC	Yes
Buffered MTP80xx tapes	PSIA	Yes
URP8xxx Card/Printer devices	UR IPC	Yes
Buffered MSP06xx 500/501 disks	PSIA	RPQ or
Buffered MTS820x tapes	FIPS	YES
Buffered MSP80xx 451/50x disks	PSIA	Yes
Buffered MSP388x disks	FIPS	Yes
Network Systems channel (HYPERchannel)	PSIA	Yes

DPS 8000 HARDWARE COMPONENT DESCRIPTIONS

INFORMATION MULTIPLEXER (IMX)

- CSD RECOMMENDED IMX CHANNEL USAGE:

  NOT MORE THAN 4 IPC-CONS
  NOT MORE THAN 4 FIPS TAPE CHANNEL ADAPTERS
  NOT MORE THAN 6 DISK CHANNEL ADAPTERS
  NOT MORE THAN 8 DISK AND TAPE CHANNEL ADAPTERS
  NOT MORE THAN 8 NDIC ADAPTERS
  NOT MORE THAN 4 HYPERCHANNEL ADAPTERS
  NOT MORE THAN 12 PSIA CHANNELS

- CSD RECOMMENDED LOGICAL CHANNEL NUMBER ALLOCATIONS ASSIGNED IN THE MCA CONFIGURATION FILE

  0 NOT USED
  1-2
  3 MAINTENANCE (SP/MCA)
  4-7
  8-27 Tapes
  28-29
  30-37 Consoles
  38-45 Unit record devices
  46-53 FNPs/PPSs
  54-61 HYPERchannels
  61-63
  64-127 Disks

- CSD RECOMMENDED LOGICAL CHANNEL NUMBER ASSIGNMENTS

Adapter	Device	Base Channel Numbers	# of chs
IPC CONS (1st)	Console with RMI	30	2
INP CONS (2,3,4)	Console w/o RMI	32,34,36	1
PSIA Tape	MPC	08,10,12,14	2
FIPS Tape	8200	24,20,16,12	4
PSIA Disk	MPC/DAU	64,68,72,76,80,84	4
FIPS Disk	3880	120,112,104,96,88,80	8
IPC-UR	PR54/PR71/Card	38,40,42,44	2
NDIC	FNPs/PPSs	46,48,50,52,47,49,51,53	1
PSIA Network	HYPERchannel	54,56,58,60	1

  * EACH ADAPTER MUST BE ASSIGNED CHANNEL NUMBERS FROM LEFT TO RIGHT:

    IF YOU HAVE TWO FIPS TAPE ADAPTERS, THE FIRST ONE WOULD BE CHANNELS 24 THRU 27, THE SECOND ONE WOULD BE CHANNELS 20 THRU 23.

    IF YOU HAVE TWO CONSOLE ADAPTERS, THE FIRST ONE WOULD BE CHANNELS 30 AND 31, THE SECOND WOULD BE CHANNEL 32.

DPS 8000 HARDWARE COMPONENT DESCRIPTIONS

MAINTENANCE SUBSYSTEM

- DPS 8000 HAS AN INTEGRATED MAINTENANCE AND SUPPORT SUBSYSTEM WI MICROPROCESSOR AT ITS NUCLEUS.
  - * REFERRED TO AS THE SERVICE PROCESSOR (SP).
  - * PROVIDES MAINTENANCE AND SUPPORT FUNCTIONS FOR ALL CENTRAL SYSTEM COMPONENTS EXCEPT THE INFORMATION MULTIPLEXER UNIT (I
    - o THE IMX USES ITS MAINTENANCE CHANNEL ADAPTERS (MCA) FOR MAINTENANCE AND SUPPORT FUNCTIONS.
  - * THE SP IS REQUIRED FOR HARDWARE INITIALIZATION, FIRMWARE LOADING, AND FOR SYSTEM BOOTLOAD OPERATIONS.
    - o SYSTEM OPERATION IS NOT DEPENDENT UPON THE SP.

MAINTENANCE SYSTEM COMPONENTS

- A SERVICE PROCESSOR BOARD WITH AN INTEL 80186 MICROPROCESSOR.
  - * 16-BIT, CAN ADDRESS UP TO ONE MEGABYTE OF MEMORY
  - * 32 KBYTES OF READ ONLY MEMORY (SP SELF TEST)
  - * 1 MEGABYTE OF RAM, 16 BITS WIDE
- A WINCHESTER DISK SUBSYSTEM FOR THE SP DATA BASE.
  - * 5.25 INCH HARD DISK WITH 28 MEGABYTES OF FORMATTED STORAGE CAPACITY.
  - * XFER RATE OF 5 MILLION BITS PER SECOND.
- A FLOPPY DISK SUBSYSTEM USED AS:
  - * 5.25 INCH DEVICE WITH FORMATTED CAPACITY OF 640 KBYTES.
  - * THE VEHICLE TO UPDATE THE DATA BASE ON THE WINCHESTER.
  - * A BACK-UP FOR SYSTEM BOOTLOAD IF THE WINCHESTER DISK FAILS.
- A SHIFT CONTROL LOGIC (SCL) FUNCTION THAT HELPS CONTROL THE OPERATION OF THE SERIAL MAINTENANCE INTERFACE (SMI) WHICH IS U IN CERTAIN TESTS AND DISPLAYS FUNCTIONS BY THE SERVICE PROCESS
- A SYSTEM CLOCK DISTRIBUTION BOARD (SCD) THAT CONTROLS THE DISTRIBUTION OF SYSTEM CLOCKS TO THE SCUs AND CPUs.

MAINTENANCE SUBSYSTEM

MAINTENANCE SYSTEM COMPONENTS

- A MULTI-DROP INTERFACE (MDI) CONNECTING THE SP TO ONE OR MORE OF THE SYSTEM CONSOLES (COMMANDS/MESSAGES) AND THE MCA (INTERFACE TO HOST OS).
- THE REMOTE MAINTENANCE INTERFACE (RMI), CONNECTED TO ONE OF THE CONSOLE IPCS, PROVIDING SYSTEM ACCESS TO THE TECHNICAL ASSISTANCE CENTER (TAC) VIA A BELL 212-A COMPATIBLE MODEM (INCLUDED).

  * GCOS 8 WILL ALLOW ONLY ONE RMI TERMINAL (TRl) CONFIGURED

- EACH IMX HAS ITS MCA INCLUDING TWO FLOPPY DISKS.
- A BATTERY-BACKED CALENDAR CLOCK TO MAINTAIN DATE/TIME AND SP CONFIGURATION FILE NAME CONTINUITY DURING SYSTEM POWER OFF PERIODS

BLOCK DIAGRAM (SINGLE)

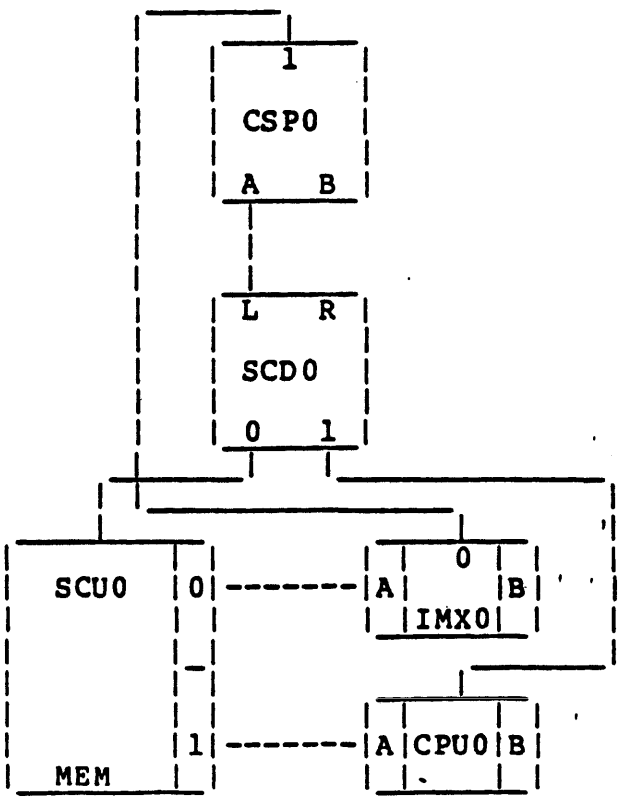

DPS 8000 HARDWARE COMPONENT DESCRIPTIONS

MAINTENANCE SUBSYSTEM

MAINTENANCE SYSTEM COMPONENTS

BLOCK DIAGRAM (TANDEM)

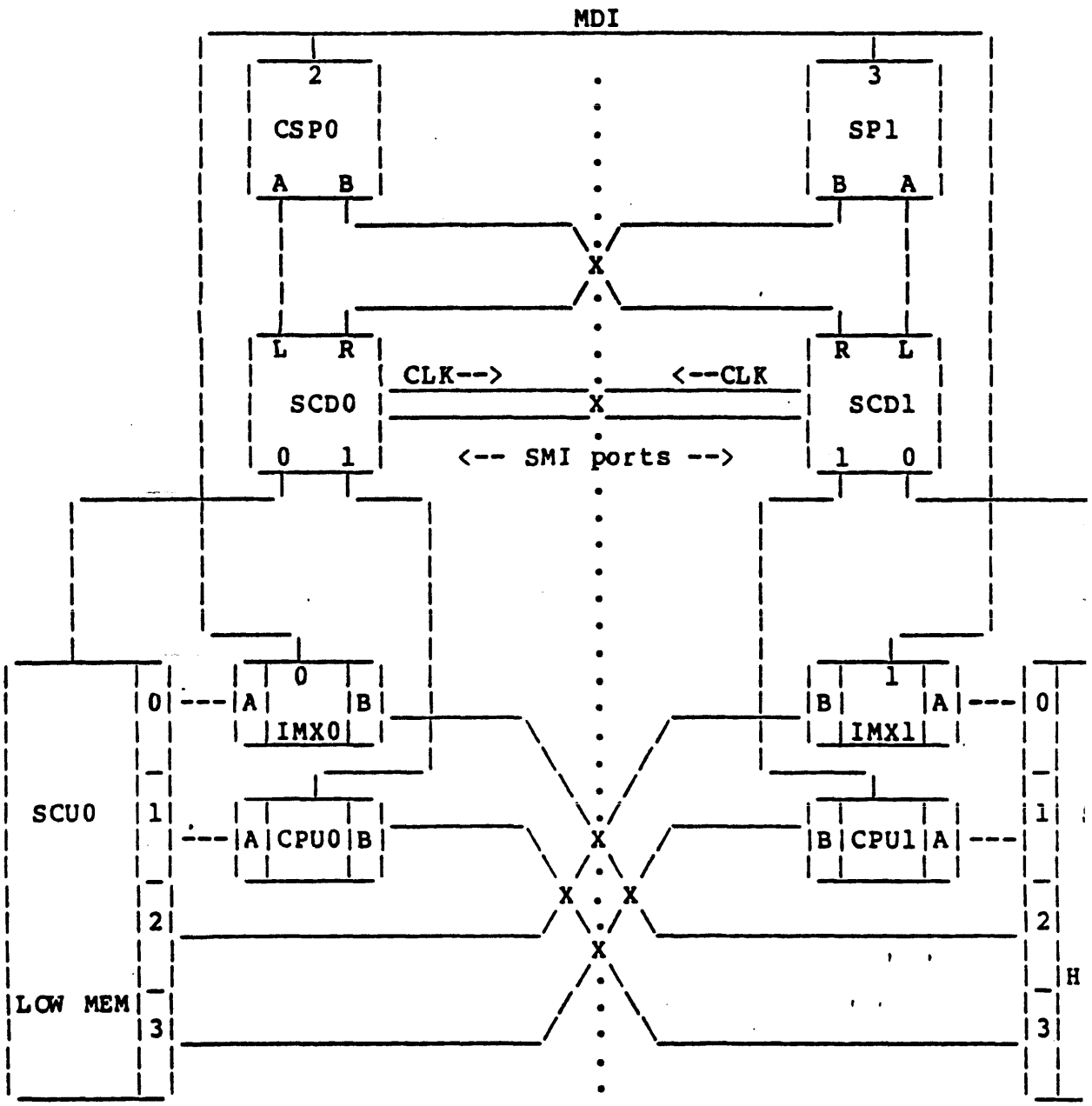

MAINTENANCE SUBSYSTEM

MAINTENANCE SYSTEM COMPONENTS

MULTIDROP INTERFACE

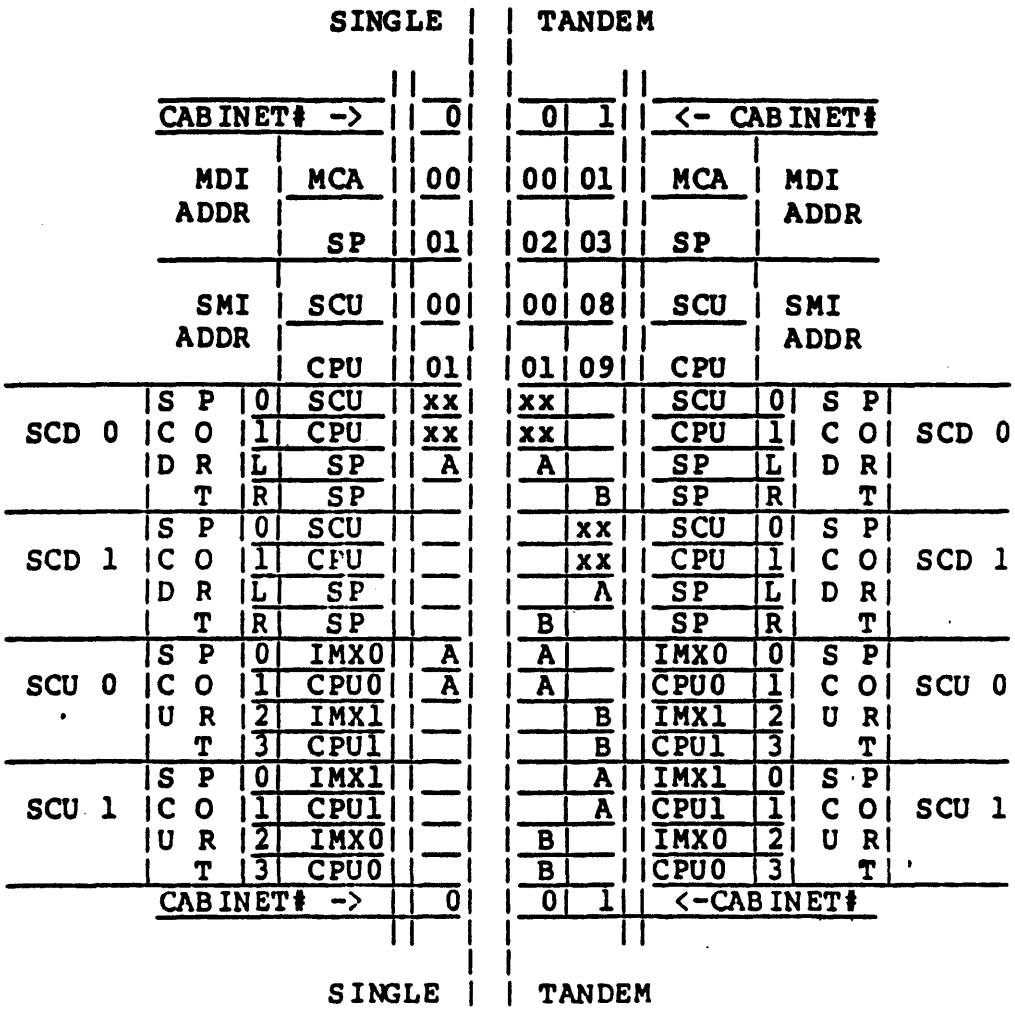

DPS 8000 HARDWARE COMPONENT DESCRIPTIONS

MAINTENANCE SUBSYSTEM

SOFTWARE COMPONENTS

- SP OPERATING SYSTEM
  - * REAL TIME, INTERRUPT DRIVEN, MULTI-TASKING AND MULTI-PROGRAMMING SOFTWARE ENVIRONMENT.
- DEVICE DRIVERS
  - * DISK DRIVER
    - o ONE DRIVER FOR BOTH THE WINCHESTER AND FLOPPY
  - * MDI DRIVER
  - * SMI DRIVER
- APPLICATION PROGRAMS (SP COMMANDS)
  - * COMMANDS MAY COME FROM:
    - o THE MASTER CONSOLE CONNECTED TO THE CONSOLE IPC

      ESC # SP > FOLLOWED BY THE SERVICE PROCESSOR COMMAND

      #SP>HELP_

      ESC # nn > nn = MCA MDI # followed by the MCA CMD

      #00>HELP_

      ESC # SP > MCA nn FOLLOWED BY THE MCA COMMAND

      #SP>MCA 00 HELP_
    - o A COMMAND FROM GCOS 8 OR TOLTS THROUGH IMX CHANNEL 3

DPS 8000 HARDWARE COMPONENT DESCRIPTIONS

MAINTENANCE SUBSYSTEM

SOFTWARE COMPONENTS

- SP SELF TESTS
  - * SP SELF TESTS ARE RUN WHENEVER THE SP IS POWERED ON OR WHEN THE SP LOAD BUTTON IS PUSHED.
  - * EXECUTION TIME GOAL IS 30 SECONDS.
  - * ERROR REPORTING MECHANISM DEPENDS UPON HOW FAR THE SELF TESTS PROCEED.
    - o BASIC PROBLEMS ARE REPORTED USING THE PROGRAM CODE LIGHTS ON THE SP CONTROL PANEL.
    - o IF THE SELF TESTS PROCEED FAR ENOUGH, THE PROBLEM IS REPORTED ON BOTH THE PROGRAM CODE LIGHTS AND THE OPTIONAL MAINTENANCE CONSOLE.

DPS 8000 HARDWARE COMPONENT DESCRIPTIONS

MAINTENANCE SUBSYSTEM

MAINTENANCE SYSTEM FUNCTIONS

- THE SP/MCA HAS THREE BASIC FUNCTIONS:
  - * RUN NFT ON ALL CPUS AND SCUS IN THE SYSTEM.
    - o ALSO INITIATE MCA RUN NFTs FOR THE IMX.
  - * PROVIDE SYSTEM STARTUP AND INITIALIZE FUNCTIONS.
    - o LOADING FIRMWARE INTO THE CPUS, IMXC AND IPCS.
    - o LOADING PHYSICAL CONFIGURATION IN THE CPUS AND SCUS AND
    - o COORDINATE INITIALIZATION AND BOOTLOAD PROCESS.
  - * MONITOR THE SYSTEM FOR DRASTIC FAULTS AND REPORT THEM TO TH SYSTEM CONSOLE.
    - o LOSS OF POWER CONFIDENCE.
    - o ANY CPU STOPPING DUE TO INTERNAL ERROR.

FUNCTIONS BELONGING TO THE OS

- FAULT RECOVERY OR RETRY
- DYNAMIC CONFIGURATION OR RECONFIGURATION OF THE SYSTEM.

SYSTEM AND SUBSYSTEM TESTING

- THE SP MAJOR TASK IS RUNNING THE NFTS ON CPUS AND SCUS.
  - * ON-LINE (GCOS MODE)
  - * OFF-LINE (IDLE).
- NFTS CAN BE INITIATED FROM:
  - * THE SYSTEM CONSOLE
- THE SP WILL CONTROL THE MCA FOR RUNNING NFTS ON THE I/O SUBSY (IMX CENTRAL AND CHANNELS).

SP AND MCA CONFIGURATION FILES

- BOTH THE SERVICE PROCESSOR AND THE MAINTENANCE CHANNEL ADAPTER HAVE ACCESS TO DISK STORAGE
  - * THE SERVICE PROCESSOR HAS:
    - o WINCHESTER DISK (PRIMARY)
    - o 5.25 INCH FLOPPY (BACKUP)
  - * THE MAINTENANCE CHANNEL ADAPTER
    - o TWO 5.25 INCH FLOPPYS (UPPER = PRIMARY, LOWER = BACKUP)
- BOTH THE SP AND THE MCAs WILL USE THESE DISKS FOR:
  - * FIRMWARE
  - * CONFIGURATION FILES
  - * SP/MCA PROGRAMS
- THE CONFIGURATION FILES FOR THE SP DEFINE:
  - * SCU CONNECTED PROCESSORS (IMX,CPU)
  - * THE UNITS AND UNIT ADDRESS OF THOSE THINGS CONNECTED TO THE SMI
  - * THE UNITS AND UNIT ADDRESS OF THOSE THINGS CONNECTED TO THE MDI
  - * UNIT REVISIONS
  - * AVAILABILITY (ACTIVE/NOT ACTIVE)
  - * FIRMWARE REVISION
  - * LOGICAL NAMES (CPU, SCU, CSP...)

SP AND MCA CONFIGURATION FILES

- THE CONFIGURATION FILES FOR THE MCA DEFINE:
  - * PHYSICAL IMX CONFIGURATION
    - IPC NUMBER AND TYPE OF INTERFACE
    - LOGICAL PRIMARY AND ALTERNATE CHANNEL NUMBERS
    - HARDWARE REVISION LEVELS
  - * IMX AND HOST BOOT INFORMATION
    - TYPE OF OPERATING SYSTEM BEING BOOTED (GCOS 8, CP6, M IV)
    - BOOT DEVICE DESIGNATOR AND TYPE
    - FIRWWARE NAMES AND REVISIONS
  - * MEMORY PORT CONFIGURATION
  - * MCA OPTIONS
    - HARDWARE TRACES AND FAULT HANDLING
- ALL CONFIGURATION FILES ARE BUILT AND MAINTAINED BY EITHER T OR MCA USING THE MASTER CONSOLE.
- INDIVIDUAL FILES WILL REFLECT SPECIFIC CONFIGURATION POSSIBI OF THE DPS 8000

SP AND MCA CONFIGURATION FILES

- DURING SYSTEM INSTALLATION, THE REQUIRED CONFIGURATION FILES WILL BE BUILT BY HONEYWELL BULL.

- WITHOUT NAMING CONVENTIONS, THE SP AND MCA CONFIGURATION FILES CAN BE NAMED ALMOST ANYTHING;
  - * NO MORE THAN EIGHT (8) CHARACTERS FOR MCA,
  - * MCA CONFIGURATION FILE NAMES MUST BEGIN WITH ".C"
  - * NO MORE THAN EIGHT (8) CHARACTERS FOR THE SP,

- NAMING CONVENTIONS ARE ESTABLISHED IN ORDER TO PROPERLY DESCRIBE THE CONTENT OF ANY GIVEN CONFIGURATION FILE.
  - * SO THAT ALL USERS REFER TO THE CONFIGURATION FILES IN A CONSISTENT MANNER.

- THESE NAMING CONVENTIONS ESTABLISH FILE NAMES WHICH REFLECT THE NATURE OF A GIVEN CONFIGURATION FILE.
  - * WHICH SERVICE PROCESSOR
  - * SINGLE OR TANDEM OR SPLIT TANDEM SYSTEM
  - * THE SPLIT OFF SIDE OF A TANDEM
  - * WHICH SCU MEMORY IS LOW MEMORY

SP AND MCA CONFIGURATION FILES

SP CONFIGURATION FILES

- THE FILE NAME WILL BE EIGHT (8) CHARACTERS OR LESS
- THE FILE NAME WILL IDENTIFY THE SERVICE PROCESSOR TO WHICH I APPLIES, (E.G., SP0 OR SP1).
- THE FILE NAME WILL IDENTIFY THE SIZE (NUMBER OF CPUs) OF THE SYSTEM, (E.G., SINGLE, TANDEM).

	1st SCU	2nd SCU
SINGLE	1 CPU	
TANDEM	1 CPU	1 CPU

- THE FILE NAME WILL PROVIDE OPTIONAL CHARACTERS TO INDICATE S SYSTEM, SPECIAL CONFIGURATION, ETC.
- THE UNITS WITHIN A CABINET (CPU, SCU, AND IMX) WILL HAVE THE NUMBER AS THE CABINET, (CPU 0, SCU 0, IMX 0 IN CABINET 0).
- THE CABINET NUMBERS WILL NOT CHANGE WHEN A SYSTEM IS LOGICAL SPLIT, e.g., CABINET 1 IS STILL CABINET 1 AFTER A SYSTEM SPL AND THE UNITS ON THAT CABINET ARE STILL CPU 1, SCU 1, AND IM
- ALL THE ABOVE YIELD A FILE NAME STRUCTURE AS FOLLOWS:

  S#sizexy

  Where: S# = S0 or S1 (SP Number) NO DEFAULT

  size = SING, TAND (NO DEFAULT)

  xy = Optional Qualifiers:

  H = Half Of System

  HR = Half Of System Released

  1 = SCU 1 is low memory (SCU 0 is def

* IN A SINGLE SCU SYSTEM, "SCU 0 is low memory" IS IMPLICI EXPRESSED
* THE PRESENTS of the Optional qualifier H INDICATES A HAL SYSTEM CONFIGURATION FILE NAME.
* THE PRESENTS OF THE HR QUALIFIER INDICATES THAT THE FILE SPECIFIES A 2 SCU SYSTEM WITH 1 SCU RELEASED

SP AND MCA CONFIGURATION FILES

SP CONFIGURATION FILES

EXAMPLE FILE NAMES

Full System File Names:

S0SING	SP 0 control/SCU 0 low memory - SINGle CPU
S0TAND	SP 0 control/SCU 0 low memory - TANDem CPUs
S0TAND1	SP 0 control/SCU 1 low memory - TANDem CPUs
S1TAND	SP 1 control/SCU 0 low memory - TANDem CPUs
S1TAND1	SP 1 control/SCU 1 low memory - TANDem CPUs

Half System File Names: These files describe half of the system.

S0TANDH	SP 0 control/SCU 0 low memory - Half TANDem system
S1TANDH	SP 1 control/SCU 1 low memory - Half TANDem system

Full System, Half Released File Names: These files describe the full system but show all ports masked on the units that have been released. These files allow GCOS 8 to recognize the released units during startup so that the system can be dynamically expanded to a full system if necessary.

S0TANDHR	SP 0 control/SCU 0 low memory - Half released tandem
S1TANDHR	SP 1 control/SCU 1 low memory - Half released tandem

- SP WINCHESTER IS SHIPPED WITH 5 CONFIGURATION FILES.

  S$NGLE TANDEM TRIP QUAD DEFAULT

- NONE OF THESE FILES SHOULD BE DELETED OR MODIFIED.
- THE DEFAULT FILE WILL BE USED IF THE FILE NAME IN THE "CURRENT CONFIGURATION FILE NAME REGISTER" IS BAD (BATTERY BACKUP BAD)

SP AND MCA CONFIGURATION FILES

MCA CONFIGURATION FILES

- O THE FILE NAME WILL BE EIGHT (8) CHARACTERS OR LESS.

- O THE FIRST TWO CHARACTERS OF THE FILE MUST BE ".C".

- O THE FILE NAME WILL IDENTIFY THE NUMBER OF SCUs IN THE SYSTEM e.g., SINGLE OR DUAL.

- O THE FILE NAME WILL PROVIDE OPTIONAL CHARACTERS TO INDICATE S SYSTEM, SPECIAL CONFIGURATION, ETC.

- O THE IMX WITHIN A CABINET WILL HAVE THE SAME NUMBER AS THE CA NUMBER, e.g., IMX 0 IN CABINET 0.

- O THE CABINET NUMBERS WILL NOT CHANGE WHEN A SYSTEM IS LOGICAL SPLIT, e.g., CABINET 1 IS STILL CABINET 1 AFTER A SYSTEM SPL AND THE IMX ON THAT CABINET IS STILL IMX 1.

- O ALL THE ABOVE YIELD A FILE NAME STRUCTURE AS FOLLOWS:

  .Csizexy

  Where: .C = Required first two characters in the name

  size = SING or DUAL (number of SCUs) NO DEFAULT

  xy = Optional qualifiers

  H = Half Of System

  1 = SCU 1 is low memory (SCU 0 IS DEFA

- * THE ABSENCE OF Optional qualifier H INDICATES A FULL SYST

SP AND MCA CONFIGURATION FILES

MCA CONFIGURATION FILES

EXAMPLE FILE NAMES

Full Systems

.CSING	SCU 0 low memory - SINGle SCU system
.CDUAL	SCU 0 low memory - DUAL SCU system
.CDUAL1	SCU 1 low memory - DUAL SCU system

Half (Split) System

.CDUALH	Half System - One (1) SCU Configured -

SP AND MCA CONFIGURATION FILES

FILE NAMES FOR DIFFERENT SYSTEMS

ON a Single CPU System:

ON SP0	ON MCA0
SUSING	.CSING
DEFAULT	

On a Dual CPU System:

	On SP0	On SP1	On MCA0	On MCA1
*1	SUTAND	S1TAND	.CDUAL	.CDUAL
*2	SUTAND1	S1TAND1	.CDUAL1	.CDUAL1
*3	SUTANDH	S1TANDH	.CDUALH	.CDUALH
*4	SUTANDHR	S1TANDHR	.CDUAL	.CDUAL

*1) Files to use when low memory is on SCU 0
*2) Files to use when low memory is on SCU 1
*3) Files to use on non-expandable split system.
*4) Files to use on expandable split systems. (Some SP commands not work with these files)

DPS 8000 INITIALIZATION AND BOOTLOAD

POWER UP INITIALIZATION

- THE SERVICE PROCESSORS WILL EXECUTE SELF TESTS, LOAD THE SP PROGRAM FROM THE WINCHESTER, AND AFTER POWER UP SEQUENCE WAIT FOR THE MASTER CONSOLE READY SIGNAL

  * ERROR INDICATION WILL APPEAR IN THE TWO PROGRAM CODE DISPLAY ON THE SP PANEL

- THE MAINTENANCE CHANNEL ADAPTER WILL EXECUTE SELF TESTS, LOAD THE MCA PROGRAM FROM ITS DISKETTE 0, CAUSE ITS MASTER CONSOLE TO RUN SELF TESTS, LOAD IMXC FROM DISKETTE AND THEN SIGNAL MC READY TO THE SP

- AT THIS POINT THE SP AND MCA[s] ARE RUNNING

  * THE SERVICE PROCESSOR:

    WILL TEST ITS CONTROL SP SWITCH (AM I A CSP?) AND IF OFF, IT WILL STOP, IF ON IT IS THE CONTROL SERVICE PROCESSOR AND MUST CONTINUE

    AFTER MEMORY HAS CLEARED, THE CSP WILL TEST ITS SYSTEM AUTO LOAD SWITCH. IF IT IS ON THE SP INITIALIZATION WILL CONTINUE, OTHERWISE IT WILL NOT GO ANY FURTHER UNTIL IT RECEIVES THE "RLOAD" COMMAND FROM THE MASTER CONSOLE.

    THE CSP NOW WILL LOAD CONFIGURATION INFORMATION INTO THE SCUs AND THE SCUs ARE THEN READY (THE PROPER FILE NAME HAS BEEN REMEMBERED IN THE SPs CLOCK BOARD)

    THE CSP WILL CAUSE FIRMWARE LOAD TO THE CPUs

  * AT THIS POINT THE SCUs, CPUs AND SPs READY. THE MCA HAS BEEN DOING THINGS ALSO:

  * AT EACH MCA

    THE MCA WILL LOAD CONFIGURATION INFORMATION TO THE IMX. THE PROPER FILE NAME HAS BEEN SAVED ON THAT MCAs, PRODUCTION FLOPPY

    THE MCA WILL RESET EACH IPC EXCEPT FOR THE MASTER CONSOLE IPC AND EACH IPC WILL RUN SELF TESTS

    THE MCA WILL LOAD FIRMWARE INTO EACH IPC

DPS 8000 INITIALIZATION AND BOOTLOAD

MAINTENANCE SYSTEM FUNCTIONS

SYSTEM INITIALIZATION AND BOOTLOAD

OPERATING SYSTEM BOOTLOAD

- OPERATING SYSTEM BOOTSTRAP FUNCTIONS (AS A RESULT OF ONE OF FOLLOWING):
  - * SP COMMAND IBOOT FROM SYSTEM INITIALIZATION
    - o THE CONTROL SP (CSP) FORWARDS THE BOOT COMMAND TO THE B MCA.
    - o THAT MCA CHECKS THAT AN INIT FUNCTION HAS BEEN DONE, I THE BOOT PROCESS IS DENIED.
    - o THAT MCA LOADS THE BOOTSTRAP PROGRAM INTO MAIN MEMORY
    - o THAT MCA FORCES THE IMX TO ENTER THE CONNECT STATE.
    - o UPON COMPLETION OF DATA TRANSFER FROM BOOT DEVICE, THE ISSUES TERMINATION INTERRUPT TO THE (UNMASKED USABLE) CPU.
    - o THE UNMASKED CPU EXECUTES THE PROGRAM IN MAIN MEMORY.

DPS 8000 INITIALIZATION AND BOOTLOAD

INITIALIZE FLOW

SPs	MCAs
POWER UP (all SPs) or SP LOAD (that SP)	
EXECUTE SELF TESTs LOAD PROGRAM FROM DISK WAIT FOR MASTER CONSOLE	EXECUTE SELF TESTS LOAD PROGRAM FROM DISK LOAD IMXC FROM DISK RESET MASTER CONSOLE RUNS SELF TEST INITIALIZES START MDI POLLING
TEST CSP SWITCH OFF - DONE ON - CSP CONTINUES	RESET ALL IPCs EXCEPT CONSOLE IPCs RUN SELF TESTS LOAD F/W TO IPCs FROM DISK
-----> CSP WAIT FOR MEMORY CLEAR TEST SP PANEL AUTO-LOAD OFF - WAIT FOR RLOAD ON	
RLOAD RESET FULL UNIT[s] RESET CPUs STOPPED CLEAR CONFIG REGS LOAD LOAD SCU CONFIG REGs LOAD CPU FIRMWARE LOAD CPU CONFIG REGs	

DPS 8000 INITIALIZATION AND BOOTLOAD

INITIALIZE FLOW

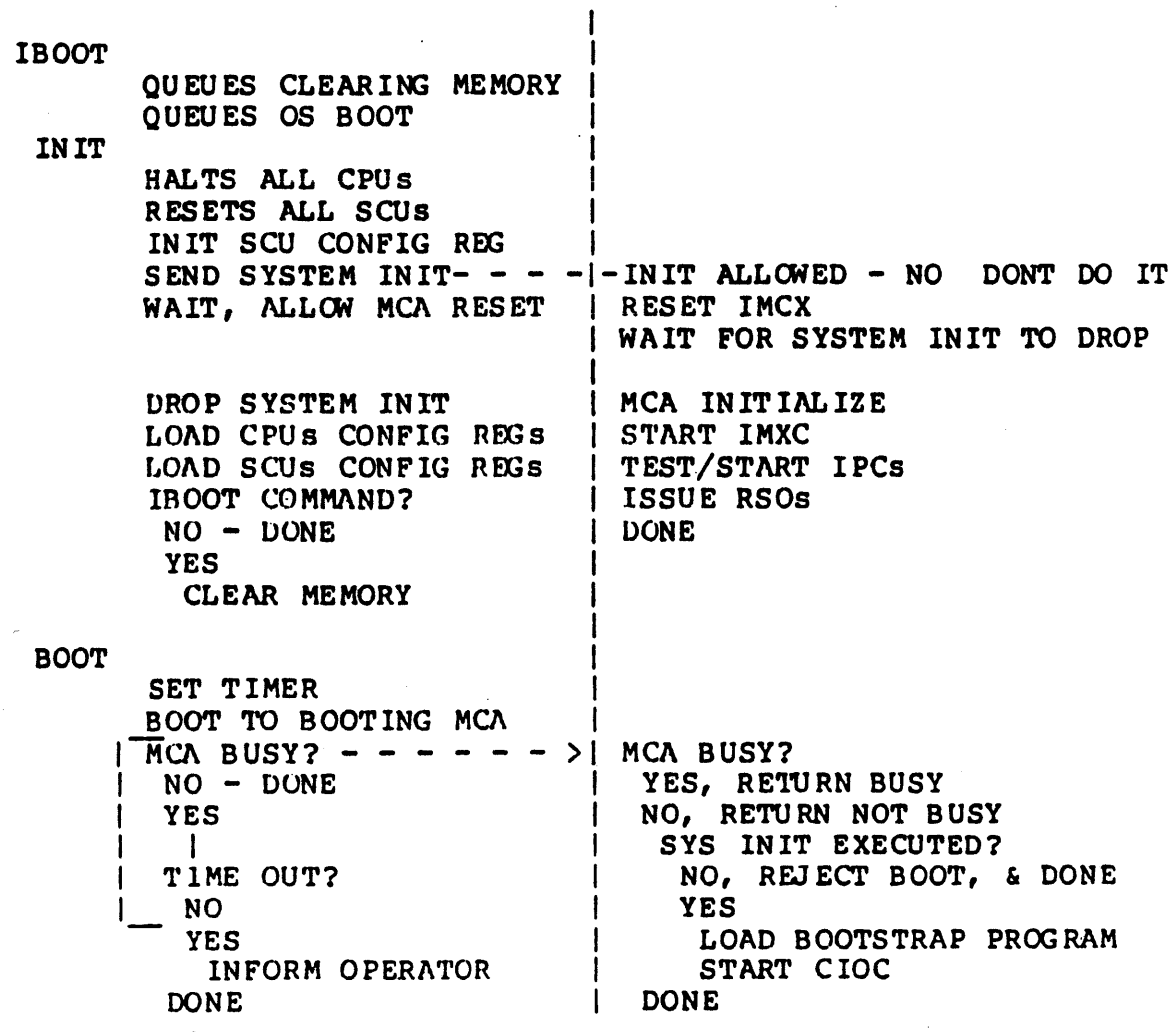

MAINTENANCE SUBSYSTEM COMMANDS (OPERATORS)

COMMAND INVOCATION

- THREE MAIN LEVELS OF "COMMANDS" VIA THE IMX CONNECTED SYSTEM CONSOLE (IN ALL CASES, THE RETURN KEY IS THE END OF MESSAGES)

COMMAND INTERPRETER	COMMAND START	
CONSOLE IPC	ESC #	MAINTENANCE SUBSYSTEM COMMANDS
CONTROL SERVICE PROCESSOR	ESC # SP	
MDI ADDRESS	ESC # nn	
GCOS 8	RETURN	

- TWO OVERALL TYPES OF MAINTENANCE SYSTEMS COMMANDS
  - * CONSOLE VERBS
    - o THOSE COMMANDS RECOGNIZED BY THE CONSOLE IPC
  - * OPERATOR COMMANDS
    - o THOSE COMMANDS THAT ARE UNDERSTOOD BY THE SP OR MCA. NOTE, SOME OF THESE COMMANDS REQUIRE ADMINISTRATION MODE AND ARE NOT COVERED IN THIS TOPIC.
- IF THE CONSOLE IPC DOES NOT RECOGNIZE THE COMMAND, IT WILL SEND IT OUT OVER THE MDI TO EITHER AN SP OR AN MCA

- TEN SECOND TIME OUT PER CHARACTER

MAINTENANCE SUBSYSTEM COMMANDS (OPERATORS)

COMMAND INVOCATION

- THE SP AND THE MCA WILL SEND MESSAGES/DATA TO THE MASTER CO

  * SP DATA WILL APPEAR BETWEEN THE INITIAL COMMAND AND THE TERMINATION MESSAGE.

    - TERMINATION MESSAGES ARE:

      <<0000>> NORMAL TERMINATION

      <<0001>> SP DETECTED ERRORS (TEST COMMAND)
      o
      <<0FFF>>

      <<1000>> INPUT REQUIRED FROM USER

      <<2001>> FUNCTIONAL TESTS DETECTED ERROR
      o
      <<2FFF>>

      <<3001>> MCA DETECTED ERRORS
      o
      <<3FFF>>

      <<4000>> INVALID COMMAND

      <<8000>> SP/MCA INTERNAL ERROR

    - <<0000>> OR <<4000>> WILL FOLLOW ANY DATA THAT MAY H BEEN TRANSMITTED AS A RESULT OF EXECUTING A COMMAND.

  * THE MCA DATA AND MESSAGES WILL BE PRECEDED BY AN IDENTIF

    - THE NUMBER SIGN (#)
    - THE MCA MDI ADDRESS nn
    - THE LESS THAN (<) SIGN
    - THE MESSAGE OR DATA
    - #00< message from MCA

MAINTENANCE SUBSYSTEM COMMANDS (OPERATORS)

CONSOLE VERBS

- IN THE NON-DEDICATED MODE, THE USER MUST PRECEDE EACH CONSOLE VERB WITH THE "ESC" "#" "SP" OR "ESC" "#" "nn" WHICH WILL TELL THE CONSOLE IPC WHERE TO SEND THE COMMAND.

- IN THE DEDICATED MODE THE USER NEED NOT USE THE ESCAPE SEQUENCE PRIOR TO THE DESIRED COMMAND. JUST START ENTERING THE COMMAND AND THE CONSOLE IPC WILL AUTOMATICALLY ADD THE ESCAPE SEQUENCE IN ACCORDANCE TO THE TYPE OF DEDICATION.

  * TO DEDICATE TO THE CONTROL SERVICE PROCESSOR

    #ENA CSP#

- ONCE IN THE DEDICATED MODE, THE USER CAN STILL USE THE ESCAPE SEQUENCE. THAT IS HOW ONE WOULD MOVE THE DEDICATION TO THE MCA.

  * THE USER CAN ALSO ENTER THE #ENA MCA OR THE #ENA CSP.

- DEDICATED MODE WILL STAY UNTIL THE USER ENTERS THE #ENA CON COMMAND OR A CONNECT IS RECEIVED FROM THE HOST OPERATING SYSTEM.

MAINTENANCE SUBSYSTEM COMMANDS (OPERATORS)

CONSOLE VERBS

- SPECIAL COMMANDS THAT EFFECT THE OPERATING MODES AND CONFIGURAT OF THE CONSOLE IPC ITSELF. NOT TALKING ABOUT GCOS CONSOLE VEF
  - * THESE COMMANDS MAY COME FROM THE LOCAL TERMINAL OR THE REMOT MAINTENANCE TERMINAL
- THE CONSOLE VERBS ARE USED TO ENABLE/DISABLE THE FOLLOWING FUNCTIONS:

#ENA REM #DIS REM	ENABLE/DISABLE THE REMOTE MAINTENANCE TERMINAL
#ALL MAI	ALLOW REMOTE MAINTENANCE TO BE PERFORMED
#ENA TEX	ENABLE TEXT COMMUNICATIONS BETWEEN THE LOCAL AND REI TERMINALS
#ENA MON #DIS MON	ENABLE/DISABLE MONITORING BY THE LOCAL TERMINAL
#ENA CON	ENABLE CONSOLE MODE, NOT DEDICATED
#ENA MD #DIS MD	ENABLE/DISABLE MULTIDROP MASTER CONSOLE (ONLY ONE MC PER CSP)
#ENA CSP #ENA CSP#	ENABLE CONTROL SERVICE PROCESSOR COMMUNICATIONS DEDICATE THE TERMINAL TO CSP COMMUNICATIONS
#ENA LOG #DIS LOG	ENABLE/DISABLE HARDCOPY PRINTER
#STA	STATUS - OUTPUT THE CURRENT IPC CONSOLE STATUS
#HIS	HISTORY DISPLAY OF THE LAST 256 BYTES EXCHANGED BETV THE IMX, THE SMI AND THE CONSOLE IPC.
#ACK ERR	ACKNOWLEDGE ERROR - THIS COMMAND WILL SUPPRESS THE I RESPONSE ERROR MESSAGE FOR EACH NON-RESPONDING MULTIDROP TARGET

```
# MULTIDROP ERROR:   NO RESPONSE #
# DETECTOR= CONSOLE  MCA/SP= 02#

#ACK ERR
```

MAINTENANCE SUBSYSTEM COMMANDS (OPERATORS)

OPERATOR COMMANDS

SERVICE PROCESSOR COMMANDS

- THESE COMMANDS MAY BE ENTERED IN EITHER THE DEDICATED OR NON-DEDICATED MODE.
- AFTER THE ESCAPE SEQUENCE, "ESC" "#" "SP# , THE CONSOLE IPC WILL ADD THE ">" CHARACTER. THE COMMAND ENTERED WILL BE SENT TO THE CONTROL SERVICE PROCESSOR.

MAINTENANCE SUBSYSTEM COMMANDS (OPERATORS)

OPERATOR COMMANDS

SERVICE PROCESSOR COMMANDS

#SP>ASSIGN HELP
#SP>ASSIGN CONFIG [config-file-name]

The ASSIGN program changes the current SP configuration file the specified filename but does not cause the selected SP to reload its configuration.

EXAMPLE:

#SP>ASSIGN CONFIG S0TAND_

The current config file is S0TAND

<<0000>> ASSIGN, normal termination

#SP>BOOT [IMXn] [DN] [CN] [TYPE]

The Boot program is responsible for booting the operating sy

EXAMPLE:

#SP>BOOT_

OPERATOR COMMANDS

SERVICE PROCESSOR COMMANDS

#SP>DIR inpath-list [to|over|after outpath-name] [options]

DIR will list the names and attributes of the data and directory files contained in a given directory.

EXAMPLE:

```
#SP>DIR  /HOSTCFG
01 Aug 87  10:17:53
DIRECTORY OF  /HOSTCFG ON VOLUME winnie
single        tandem       trip         quad          default
SOTANDH       SOTAND       SOTANDHR
```

#SP>HELP [command [topic]]

HELP will return varying degrees on command information.

EXAMPLE:

```
#SP>HELP_
```

Help is available for the following operator topics

VERSION	HELP	STATE	MCA	VERIFY
COMPARE	HML	PAUSE	ADMIN	EXIT
LOAD	SCL	SPT	RLOAD	CONFIG
RESET	SHIFT	COPYJRNL	MAINT	READ
DPM	MPM	NFT	DISPLAY	R-MEM
W-MEM	R-CONQ	W-CONQ	ROINTQ	W-INTQ
R-HITS	CONFDATA	IBOOT	INIT	BOOT
SWITCH	ASSIGN			

<<0000>> HELP - normal termination

OPERATOR COMMANDS

SERVICE PROCESSOR COMMANDS

#SP>IBOOT [IMXn] [DN] [CN] [TYPE]

IBOOT is a combination of the INIT and BOOT commands. IBOOT wi also clear main memory.

#SP>INIT [HELP]

INIT is responsible for initializing the system prior to BOOT. The program will send a system initialize through the SCU port. The configurations will be loaded and the CPU's left running. LOAD or RLOAD must be done at least once before doing the INIT the AUTO LOAD switch was up during power-up.

EXAMPLE:

#SP>INIT_

#SP>LOAD [parameter1] [parameter2] [parameter3]

LOAD is responsible for loading firmware and configuration information into any configured CPU and loading configuration information into any configured SCU.

EXAMPLE:

SP#>LOAD CPU 1_
CPU 1 LOADED CCS=AC ECS=HP PATROL=AA CONFIGURATION

<<0000>> - LOAD APPLICATION - NORMAL TERMINATION

OPERATOR COMMANDS

SERVICE PROCESSOR COMMANDS

#SP>RESET SCU|CPU|SYS|HELP

RESET will do a full unit NFT reset on the specified unit. RESET leaves the CPU run flip flop off.

EXAMPLE:

#SP>RESET CPU 1_

<<0000>> RESET - NORMAL TERMINATION

#SP>RLOAD SYS|.Cxxxx|CPU n|SCU n|HELP

RLOAD RESETs and then LOADs firmware into the specified unit. xxxx allows specifying another guiding SP configuration file.

#SP>SWITCH target options

SWITCH allows the operator to enable/disable ports on the SCU and CPU

target = SCU n|CPU n
options = PORT n <ON|OFF>

#SP>SWITCH SCU 0 PORT 2 OFF

MAINTENANCE SUBSYSTEM COMMANDS (OPERATORS)

OPERATOR COMMANDS

MAINTENANCE CHANNEL ADAPTER COMMANDS

- THESE COMMANDS MAY BE ENTERED IN EITHER THE DEDICATED OR NON-DEDICATED MODE.
- AFTER THE ESCAPE SEQUENCE, "ESC" "#" "SP" , THE CONSOLE IPC W ADD THE ">" CHARACTER TO INDICATE THAT THIS LINE WAS SENT TO T CSP. HERE YOU SHOULD USE THE SP MCA nn COMMAND, TO TELL THE C TO SEND THIS COMMAND TO AN MCA
- WHEN A LINE OF INFORMATION IS RECEIVED FROM A MAINTENANCE CHAI ADAPTER, THE CONSOLE IPC WILL ADD #00<, FOLLOWED BY THE MESSAC

OPERATOR COMMANDS

MAINTENANCE CHANNEL ADAPTER COMMANDS

#SP>MCA nn C

C will display commands recognized by the MCA

#SP>MCA nn DIR [drive]

DIR will display the contents of the header (.DSPFILE) and the directory in that formatted area for the selected drive (drive 0 is default).

EXAMPLE:

#SP>MCA 0 DIR_

```
#00<Title     PRO        DATE created 070287  IPI num      WIPC66LA-
#00<Uniqueid PILOT1      Date changed 070287  Disk dwg num
#00<Equip Type   MCA     Diskette num 1 of 1
#00<  Name    Size     Name     Size     Name     Size     Name     Size
#00<.DPSFILE 001E   .MCA       05ED   .CSPEER    0758   .CDN8S     0758
#00<.CDUALH  0758   MREX20A0   8100   MSYTLOAD   3B00   MDUTLOAD   4200
#00<MBOOT1A0 5100   MBOOT2A0   1D00   MSTAT0A0   2E00   MCFIG1A0   4F00
#00<MCFIG2A0 5100   MMUTL0A0   3E00   MFALT0A0   4200   MXFER0A0   1400
#00<MFUTL0A0 2400   MTUTL0A0   3700   MREAD0A0   1600   MCFIG3A0   2F00
#00<MIMUD0A0 3C00   MHUTL0A0   3E00   ICRD00C0   5C00   IFTP00E0   4C00
#00<IPR540C0 6600   IFDK00F0   6300   IIMXC0F0   C200   .CDUAL     0758
#00<Blocks used: 1602     Blocks deleted: 16   Blocks remaining 836
```

#SP>MCA nn HELP command

HELP will display and/or list selected or all MCA commands including console error messages. (REQUIRES THE UTI DISKETTE in drive 1)

MAINTENANCE SUBSYSTEM COMMANDS (OPERATORS)

OPERATOR COMMANDS

MAINTENANCE CHANNEL ADAPTER COMMANDS

#SP>MCA nn LISTCFIG [config file]

This command will list the contents of the named configuratin in formatted form. If no name is specified, the current, in u file name will be used.

#SP>MCA nn LOAD target

The LOAD command will load firmware to the target IPC, IMX or

OPERATOR COMMANDS

MAINTENANCE CHANNEL ADAPTER COMMANDS

#SP>MCA nn PORT mport mask_state

This command is used to enable or disable an IMX memory port.

#SP>MCA nn RESET target

This command causes the selected target to be reset, self-tested, and placed in an operational state if possible.

#SP>MCA nn RLOAD target

This command is a combination of the RESET and the LOAD commands.

OPERATOR COMMANDS

MAINTENANCE CHANNEL ADAPTER COMMANDS

#SP>MCA nn STARTREX

This command will reboot the MCA

#SP>MCA nn STATE target

This command displays the current state of an adapter.

#SP>MCA nn TIME [new date,new time]

The TIME command sets the date and time in the MCA.

new date = MMDDYY

new time = hhmmss (hh = 0 to 23)

MSU3380

I/O SUBSYSTEMS

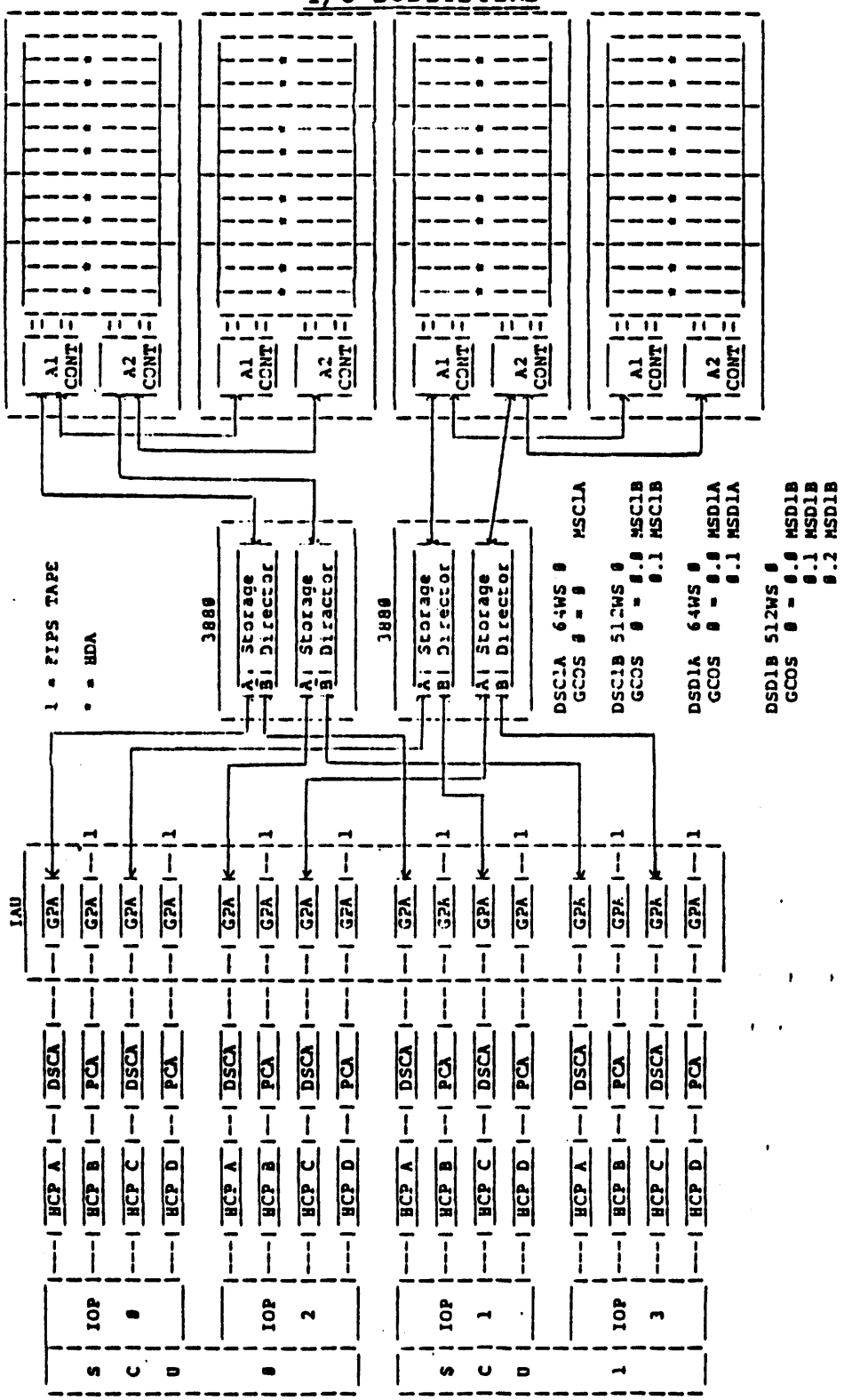

MSU3380

POWER SEQUENCE

All power control within the 3380/1/2/3 disk system is controlle by the 3880 control unit. To power the disk system up, you will depress the power control button on the 3880 controller. Once the power switch has been depressed, the 3880 controller cycles up and starts power to each spindle in sequential order a they are configured. If the 3880 has any problems in this startup sequence, it will advance to the next spindle and wil complete the entire process until all devices have power. If y don't get the green all ready light on the 3880 for each spindl you will need to contact your site engineer.

3380/1/2/3'S DO NOT HAVE A WRITE PROTECT SWITCH.

3380/1/2/3'S DO NOT HAVE I.D. PLUGS.

IF AN HDA MUST BE MOVED, THE DEVICE NUMBER MUST BE CHANGED WITH THE SYSTEM, (I.E., BOOT AND CHANGE CONFIG).

POWER SEQUENCE

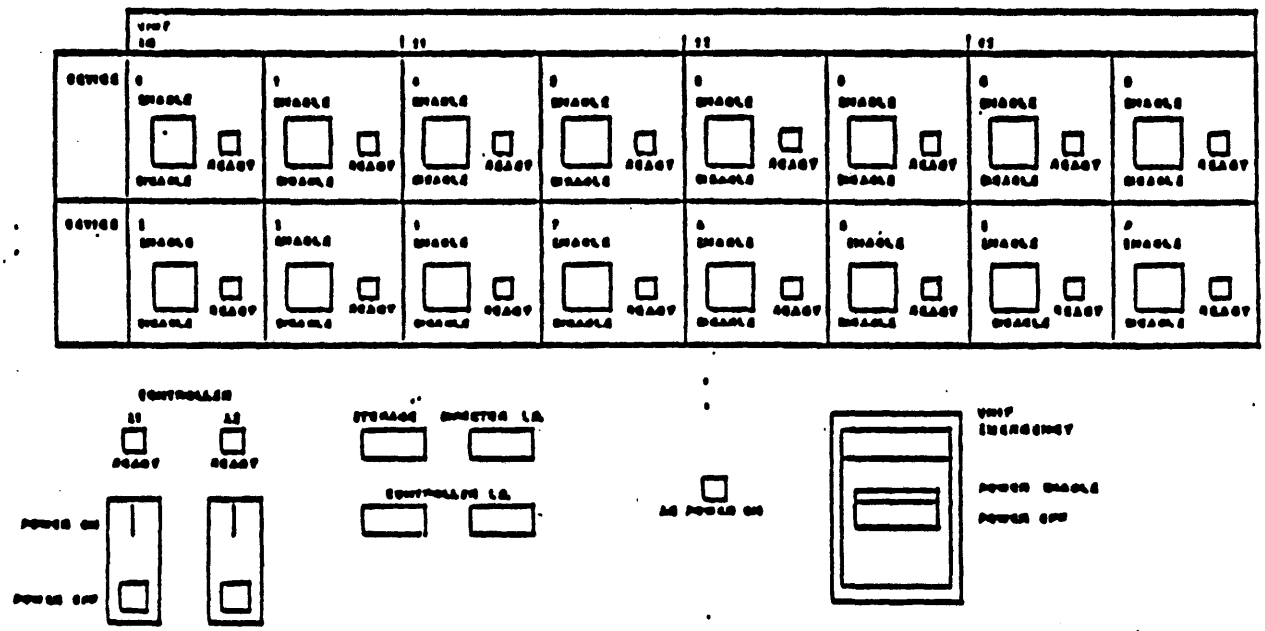

One Enable Disable switch and a green ready light for each mechanisem.

One Power on/off switch and a green ready light for each controller

One red AC Power On light which indicates AC power to the unit

MSU3380

BASIC CONFIGURATION

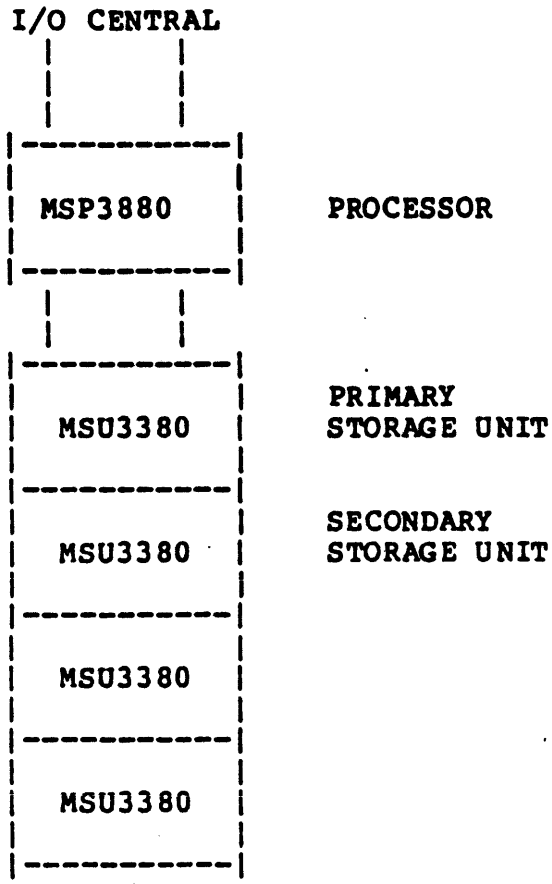

MASS STORAGE UNIT

MASS STORAGE UNIT CONTAINS 2 CONTROLLERS WHICH INTERFACE TO THE MSP3880 SERIES STORAGE DIRECTORS AND TO THE HDA'S.

CONTROLLERS PROVIDE DUAL SIMULTANEOUS ACCESS TO ANY TWO ACTUATORS IN A STRING.

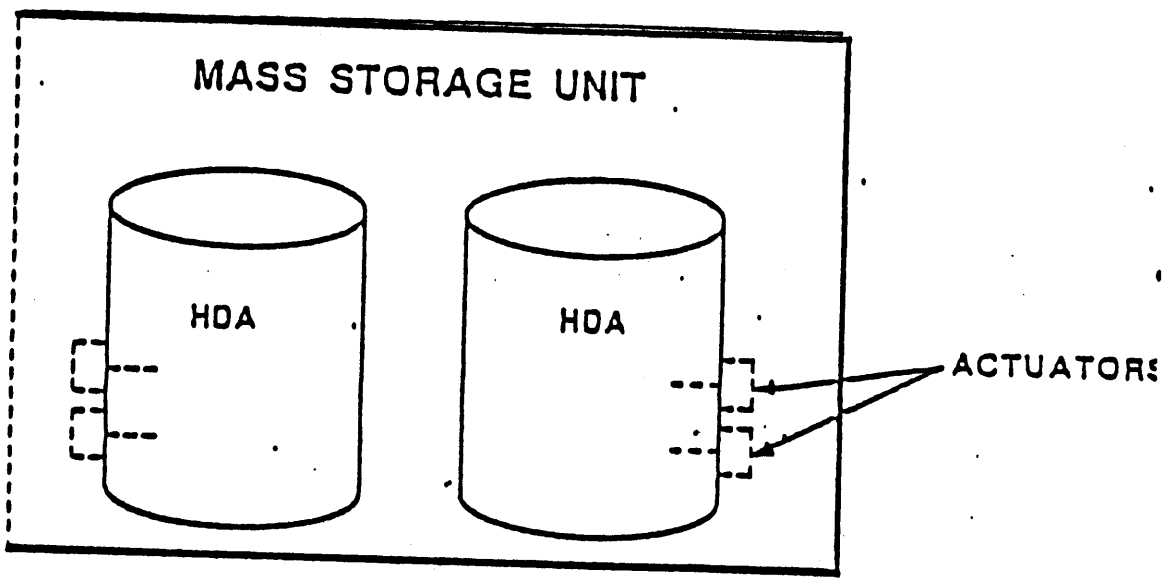

MSU3380

MASS STORAGE UNIT

MASS STORAGE UNIT CABINET CONTAINS TWO HEAD AND DISK ASSEMBLIES (HDA'S) EACH WITH TWO ACTUATORS.

EACH ACTUATOR IS INDEPENDENTLY ADDRESSABLE AND CAN BE CONSIDERED AS A SEPARATE DEVICE.

HDA'S CONTAIN THE RECORDING MEDIA, READ/WRITE HEADS, AND 2 ACTUATORS IN AN ENCLOSED ASSEMBLY FOR PROTECTION FROM CONTAMINANTS.

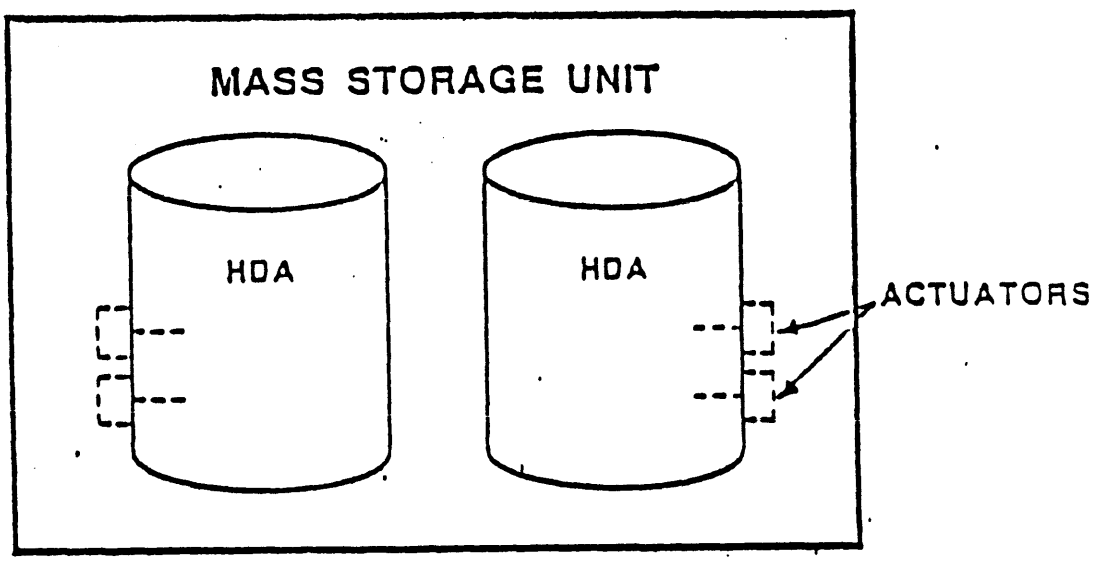

MSU3380/1-3382/3 CAPACITY & PHYSICAL ATTRIBUTES

CAPACITY
TWO FORMATS AVAILABLE
FORMAT SELECTABLE IN FIELD

CAPACITIES	UNIT	PER ACTUATOR
UNFORMATTED	2,520 MB	630 MB
512 WORD SECTOR (MSC1B)	1,846 MC	461 MC
64 WORD SECTOR (MSC1A)	800 MC	200 MC
512 WORD SECTOR (MSD1B)	3,697 MC	924 MC
64 WORD SECTOR (MSD1A)	1,604 MC	401 MC

PHYSICAL ATTRIBUTES
Each MSU3380/1/2/3 physical unit (i.e., cabinet) contains two physical device/spindles numbered in pairs of even-odd integers ranging from 0 to 31.

LOGICAL DEVICES AND SUBUNITS
Devices (logical or physical) are the addressable entities.A logical device (subunit) is the software addressable entity, while a physical device (the actuator) is the hardware addressable entity.

For MSU3380/MSC1A, all cylinders (0-883) withen each actuator are treated as one logical device.Each logical device must be described on a $ Iyy statmentby a field of the form UNIT-dd,where dd represents the physical device (actuator). An explisit subunit designation is not permitted.

For MSU3380/MSC1B, the cylinders within each actuator are partitioned into two logical devices, or subunits: cylinders 0-441 are mapped to subunit dd.0, whilecylinders 442-883 are mapped to subunit dd.1.

For MSU3381/MSD1A, the cylinders withen each actuators are partitioned into two logical devices, or subunits: cylinders 0-884 are mapped to subunit dd.0, whilecylinders 885-1769 are mapped to subunit dd.1

For MSU3381/MSD1B, the cylinders withen each actuator are partitioned into three logical devices, or subunits: cylinders 0-589 are mapped to subunit dd.0, cylinders 590-1179 are mapped to subunit dd.1 and cylinders 1180-1769 are mapped to subunit dd.2.

LOGICAL DEVICES AND SUBUNITS

LOGICAL DEVICES AND SUBUNITS

For MSU3380/MSC1A, all cylinders (0-883) withen each actuator ar
treated as one logical device. Each logical device must be descri
a $ Iyy statment by a field of the form UNIT-dd, where dd represe
the physical device (actuator). An explicit subunit designation
permitted.

Front HDA		Rear HDA	
actuator 0	actuator 1	actuator 2	actuato 3
logical device 00	logical device 01	logical device 02	logical dev 03

For MSU3380/MSC1B, the cylinders within each actuator are partit
into two logical devices, or subunits: cylinders 0-441 are mappe
subunit dd.0, while cylinders 442-883 are mapped to subunit dd.1

For MSU3381/MSD1A, the cylinders withen each actuators are parti
into two logical devices, or subunits: cylinders 0-884 are mappe
subunit dd.0, while cylinders 885-1769 are mapped to subunit dd.

Front HDA		Rear HDA	
actuator 0	actuator 1	actuator 2	actuatc 3
logical devices 0.0,·0.1	logical devices 1.0,1.1	logical devices 2.0, 2.1	logical dev 3.0, 3.

For MSU3381/MSD1B, the cylinders withen each actuator are partit
into three logical devices, or subunits: cylinders 0-589 are maj
subunit dd.0, cylinders 590-1179 are mapped to subunit dd.1 and
cylinders 1180-1769 are mapped to subunit dd.2.

Front HDA		'Rear HDA	
actuator 0	actuator 1	actuator 2	actuat(3
logical devices 0.0, 0.1, 0.2	logical devices 1.0, 1.1, 1.2	logical devices. 2.0, 2.1, 2.2	logical de 3.0, 3.1,

MSU3380

MAXIMUM PHYSICAL CONFIGURATION

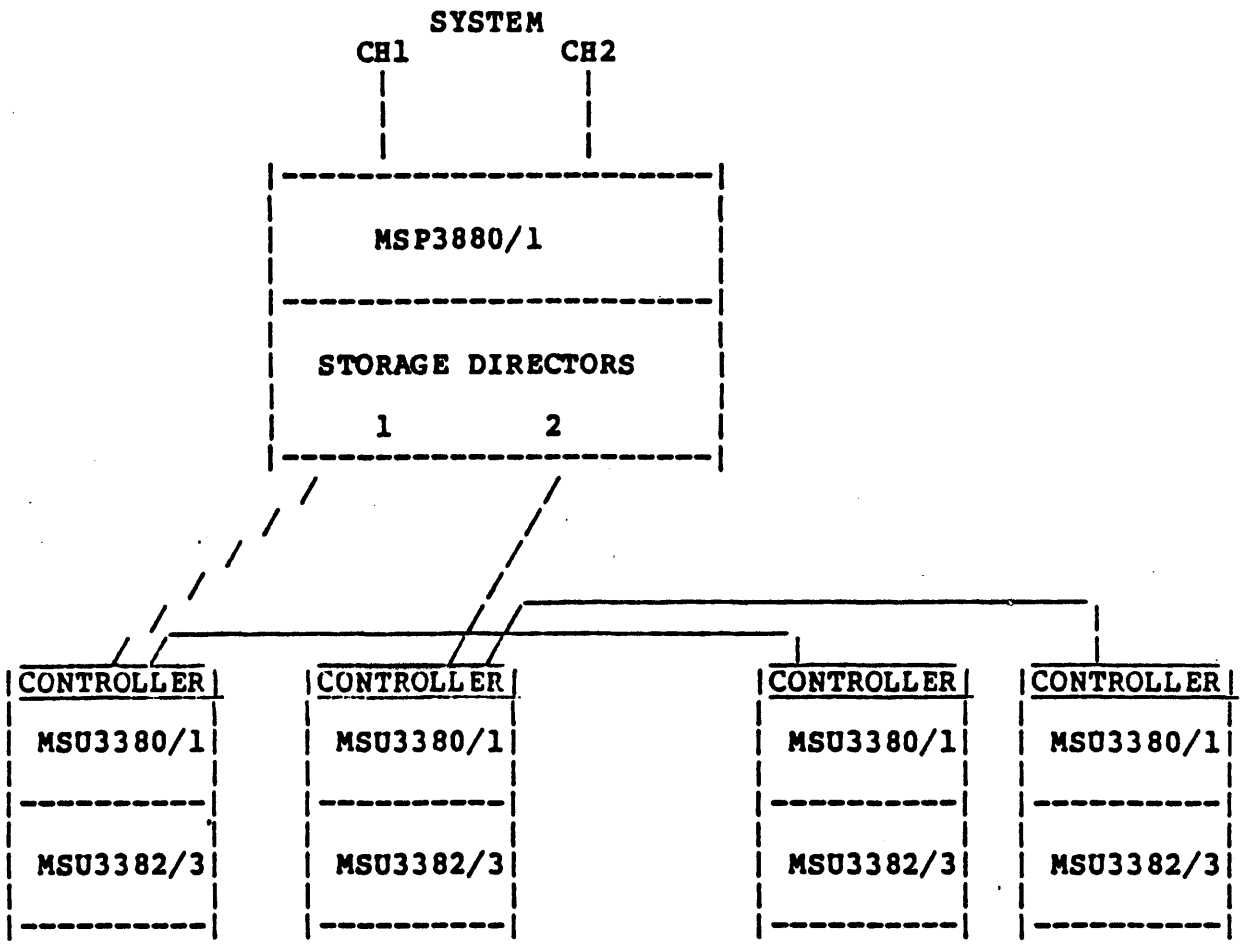

MSU3380

HIGH AVAILABILITY SUBSYSTEM

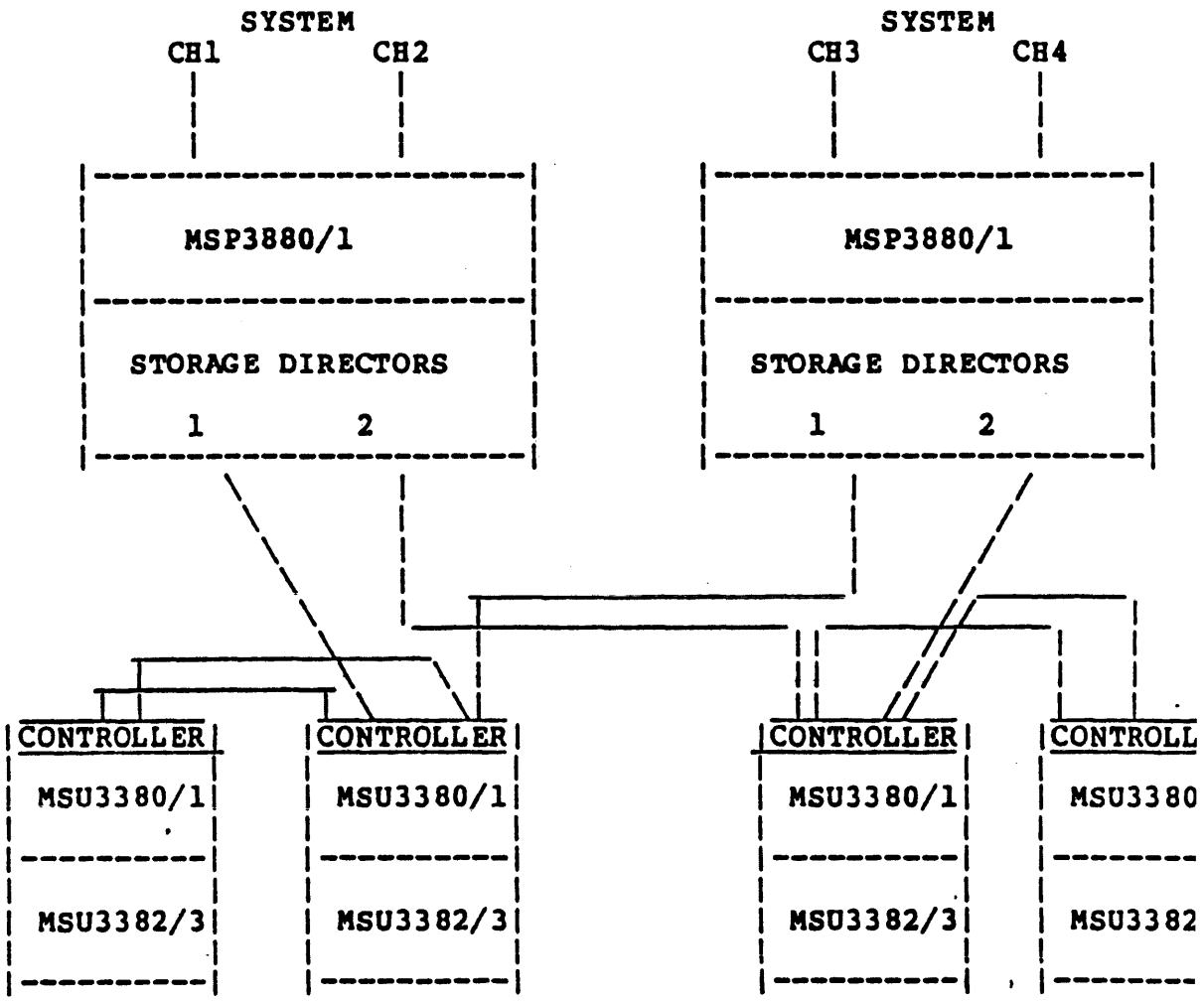

MSU3380

RAPID ACCESS DATA SYSTEM (RADS) ✓

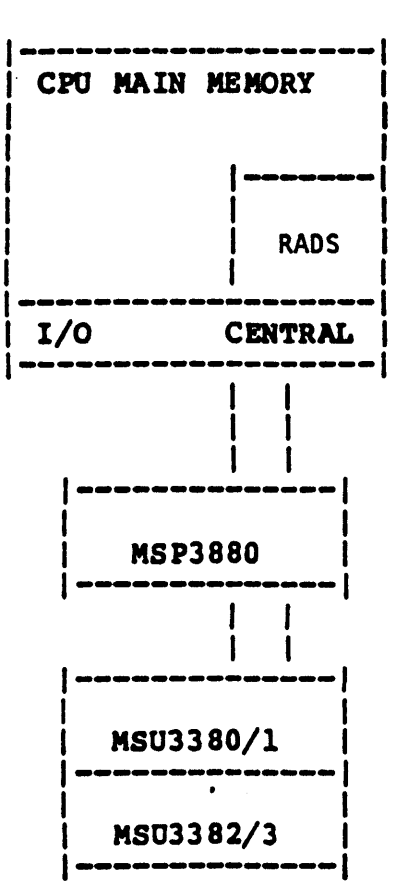

RADS MAINTAINS A COPY OF FREQUENTLY USED DATA

- REDUCES DISK ACCESSES BY 20-70%
- FAST MEMORY ACCESS TO DATA
- MINIMIZES I/O BOUND SYSTEM TO INCREASES CPU UTILIZATION

FASTER USER RESPONSE TIME

INCREASES SYSTEM THROUGHPUT

REDUCES JOB EXECUTION TIME

IMPROVES BALANCE BETWEEN CPU AND MASS STORAGE PERFORMANCE

3380 FORMATTING

MSU3380/1/2/3 DEVICES ARE FORMATTED VIA FTAR, SIMILAR TO MTAR FOR MSU0500/MSU0501.

EITHER 64-WORD SECTORS OR 512-WORD SECTORS MAY BE USED.

ALTERNATE TRACKS WILL BE ASSIGNED BY FTAR.

DEFECTIVE TRACK NO ALTERNATE ASSIGNED (I.E., TI BITS = 11) CAN'T BE USED ON 3380'S.

THE TEST OPTION DURING DEVICE INIT IS NOT USED. ALTERNATE TRACK MANAGEMENT IS HANDLED BY FTAR AND THE STORAGE DIRECTOR.

MEDIA EARLY WARNING SYSTEM (MEWS)

MEWS monitors and reports on the following types of disk media errors:

a. Retries performed
b. EDAC correctables
c. EDAC uncorrectables

MEWS issues error messages on the operator console whenever the user-specified threshold for any of the above error types is exceeded in a user-specified length of time. A message is also issued if the total of all errors of any of the above types exceeds its threshold in its length of time.

When a threshold is exceeded the operator is advised that an abnormal condition exists and on which device the threshold was exceeded.

MSU3380

CONSOLE MESSAGE

A new exception processing message has been implemented for FIPS mass storage devices. This message will precede the standard exception processing message for all errors encountered on these devices. This new message reflects the sense byte information, represented in hexadecimal, which is returned in the extended status from the i/o error. It is of the following form:

```
*  FMT v MC w SD xx DEV y SC zzzz I-CCC-DD
```

where:

v	is the Format code from byte 7 bits 0 - 3 of extended status.
w	is the Message code from byte 7 bits 4-7 of extended status.
xx	is the Storage Directors Physical ID from byte 21 bits 0-7.of extended status.
y	is the Device Number from byte 4 bits 4 - 7 of extended status.
zzzz	is the Symptom code from bytes 22 & 23 of extended status
I	is the I/O controller number in decimal.
CCC	is the channel number in decimal.
DD	is the device number in decimal.

The ICCCDD information is given for correlation with the subsequent standard exception processing message.

On these devices a format code of "E" indicates a status of Storage Director Off Line has occurred. When this occurs, the subsequent GEPR message will indicate a major status of 12 and a substatus of 16. In thi case, it is recommended that the "K" option be supplied to enable the operating system to route all further I/O for these devices to another channel.

EXAMPLE:

```
      **FMT 5 MC 3 SD 10 DEV 0 SC 4000  0-32-51
*M13 T 2225 DP 0-32-51 SAVEO 1121660 RU ? s
*M13 T 2225 DP 0-32-51 SAVEO S.A.=1121660  DF1
*M13 T 2225 DP 0-32-51 SAVEO RU ? r
```

CONSOLE MESSAGES

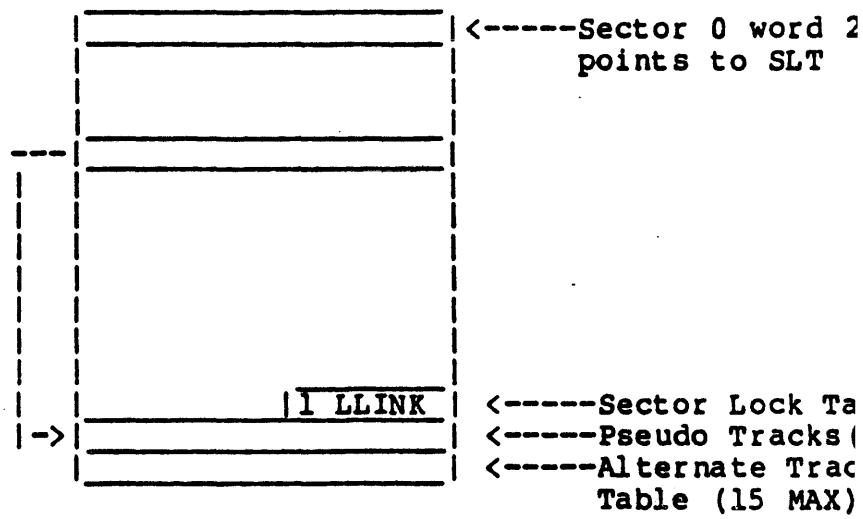

When you receive a message from the Exception Processor (GEPR) a
of "v" copies data to an alternate software track and makes a tat
to point to this alternate.

EXAMPLE:

```
*M03 T 25 DP 0-032-51 SAVEO RUV?  v
  :
  :
```

A console message will be issued to the operator.

XXX I-CCC-DD CCC/HH MOVED TO TEMP ALTERNATE.(XXX=DEV ID)

Running FTAR will assign a permanent alternate track.

CONSOLE MESSAGE

APPENDIX B

GEPR STATUS CODES AND ACTION TABLES

MEDIA FAILURE

STATUS	DESCRIPTION	RECOVERY ACTION
00/20	Channel ready, data corrected by EDAC	Run ftrl range of seek address Run DSUR for ownership of space Run ftar to repair the track.
00/01-03	Channel ready, retry was performed.	(Same as above)
03/20	Data alert, cyclic check character alert uncorrectable by EDAC	Obtain seek address. Retry I/) "R" option. Run ftrl range of seek address . Respond with "V" option. Run Dsur for ownership. Return status to user "U" option Abort user "A" option. Run ftar to repair track. Notify CE.
03/40	Data alert, cyclic check character alert, data verificatation alert	(Same as above)
13/42	uncorrectable read in RAR part of write command.	(same as above)

SINGLE CHANNEL

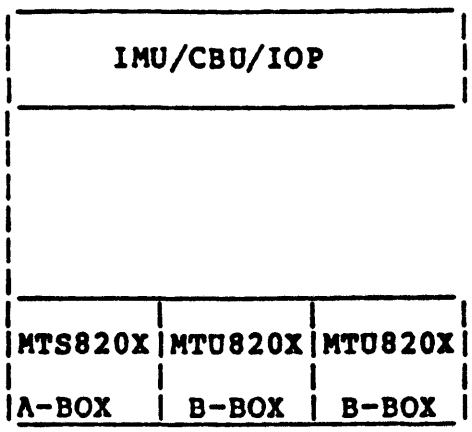

Switching Panel

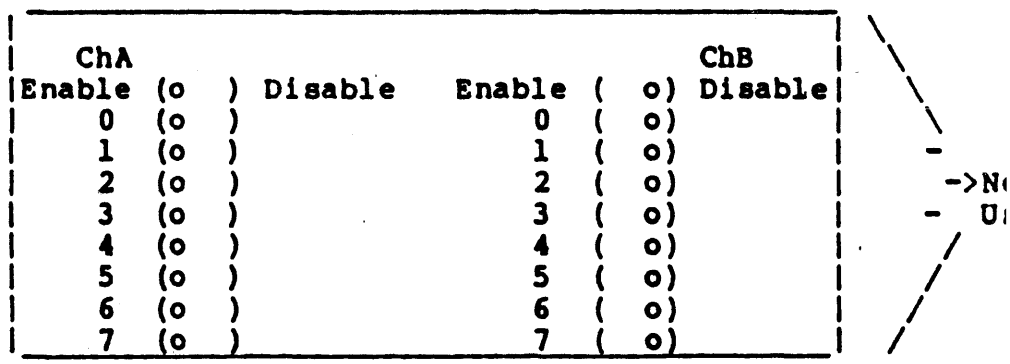

SINGLE CHANNEL

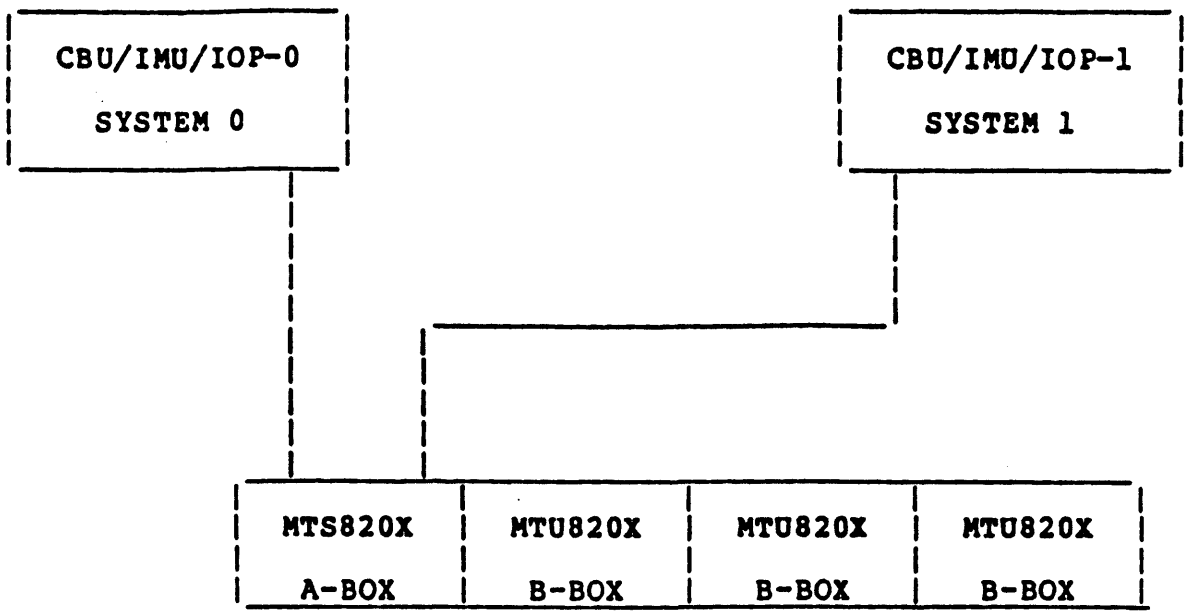

SHARDED TAPE SUBSYSTEM BETWEEN TWO SYSTEMS

ChA Enable		Disable	Enable		ChB Disable
0	(o)		0	(o)	
1	(o)		1	(o)	
2	(o)		2	(o)	
3	(o)		3	(o)	
4	(o)		4	(o)	
5	(o)		5	(o)	
6	(o)		6	(o)	
7	(o)		7	(o)	

CHANNEL A FOR SYSTEM 0 CHANNEL B FOR SYSTEM 1

DUAL CHANNEL

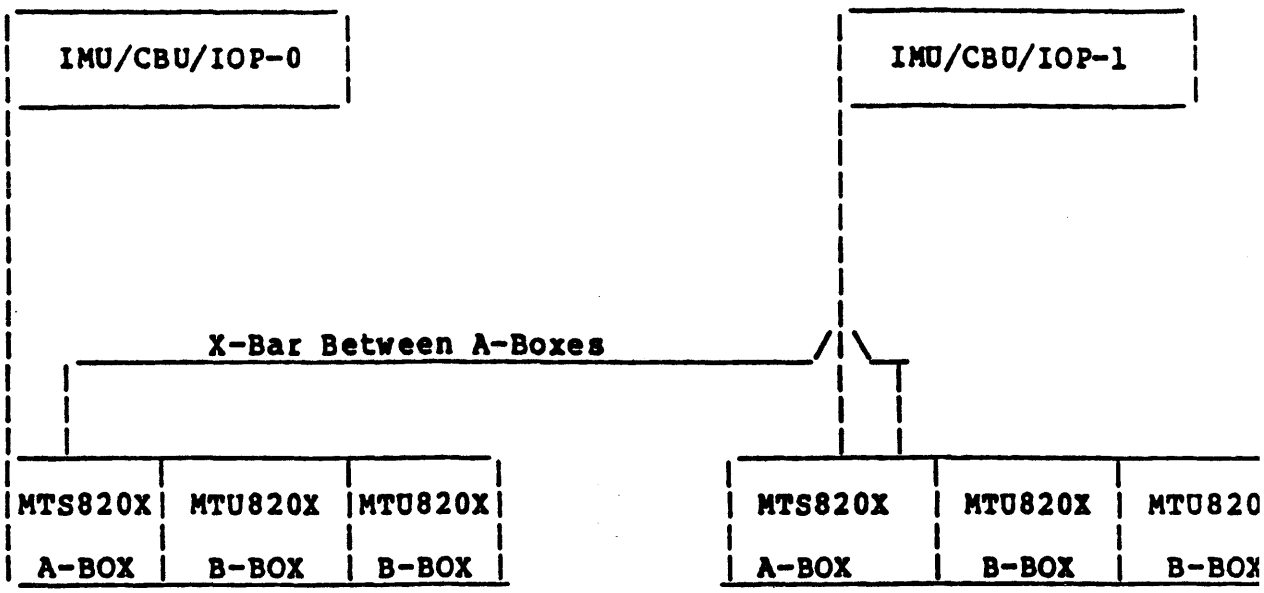

THE B-CHANNEL CONTROLS DEVICE ACCESS FROM THE SECONDARY IMU/CBU

Switching Panel

CBU/IMU0			CBU/IMU1		
ChA Enable		Disable	Enable		ChB Disable
0	(o)		0	(o)	
1	(o)		1	(o)	
2	(o)		2	(o)	
3	(o)		3	(o)	
4	(o)		4	(o)	
5	(o)		5	(o)	
6	(o)		6	(o)	
7	(o)		7	(o)	

UNITS 0 THROUGH 7

Switching Panel

CBU/IMU1			CBU/IMU		
ChA Enable		Disable	Enable		ChB Disabl
0	(o)		0	(o)	
1	(o)		1	(o)	
2	(o)		2	(o)	
3	(o)		3	(o)	
4	(o)		4	(o)	
5	(o)		5	(o)	
6	(o)		6	(o)	
7	(o)		7	(o)	

UNITS 8 THROUGH 15

POWER APPLICATION

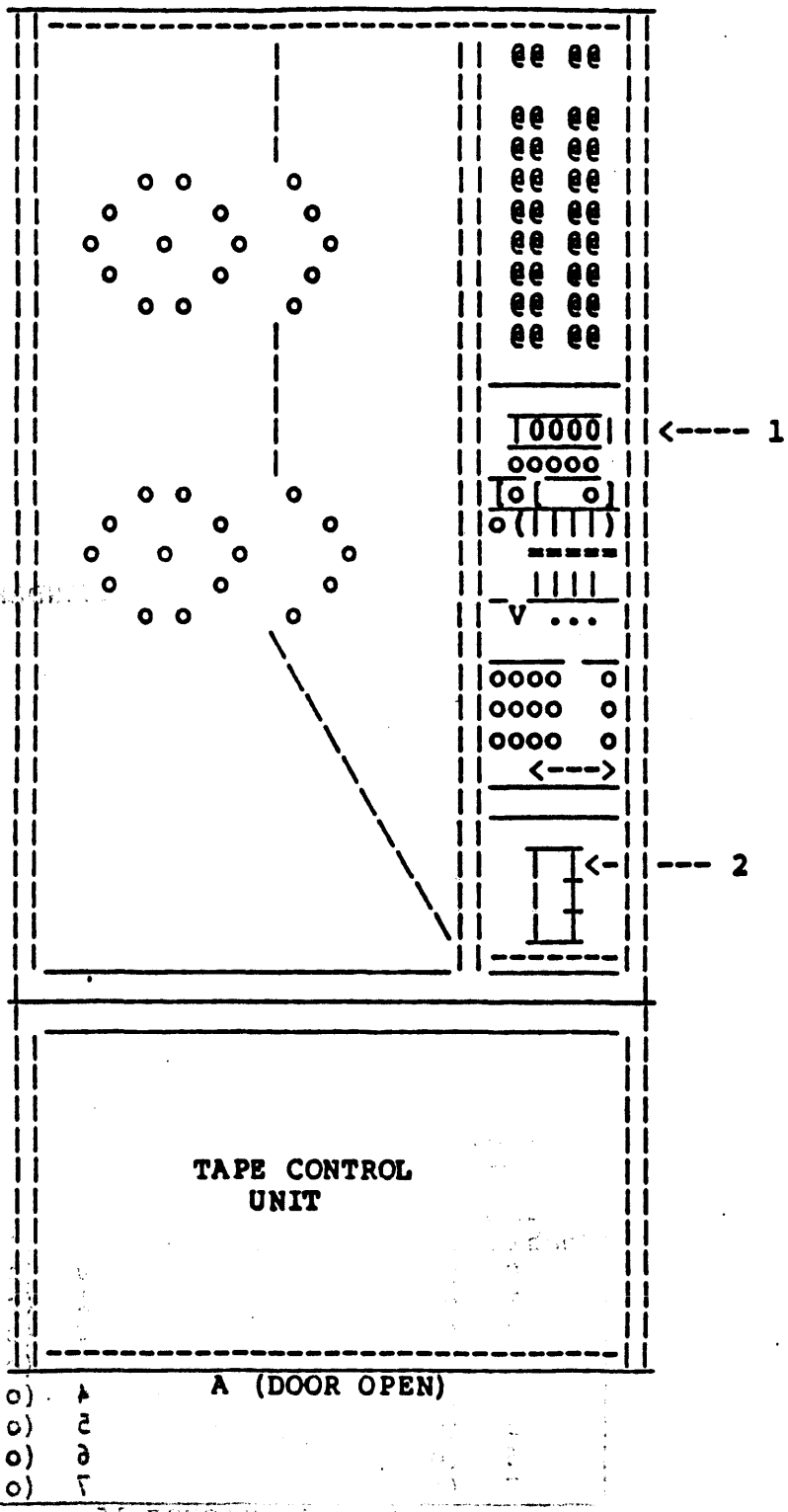

POWER APPLICATION

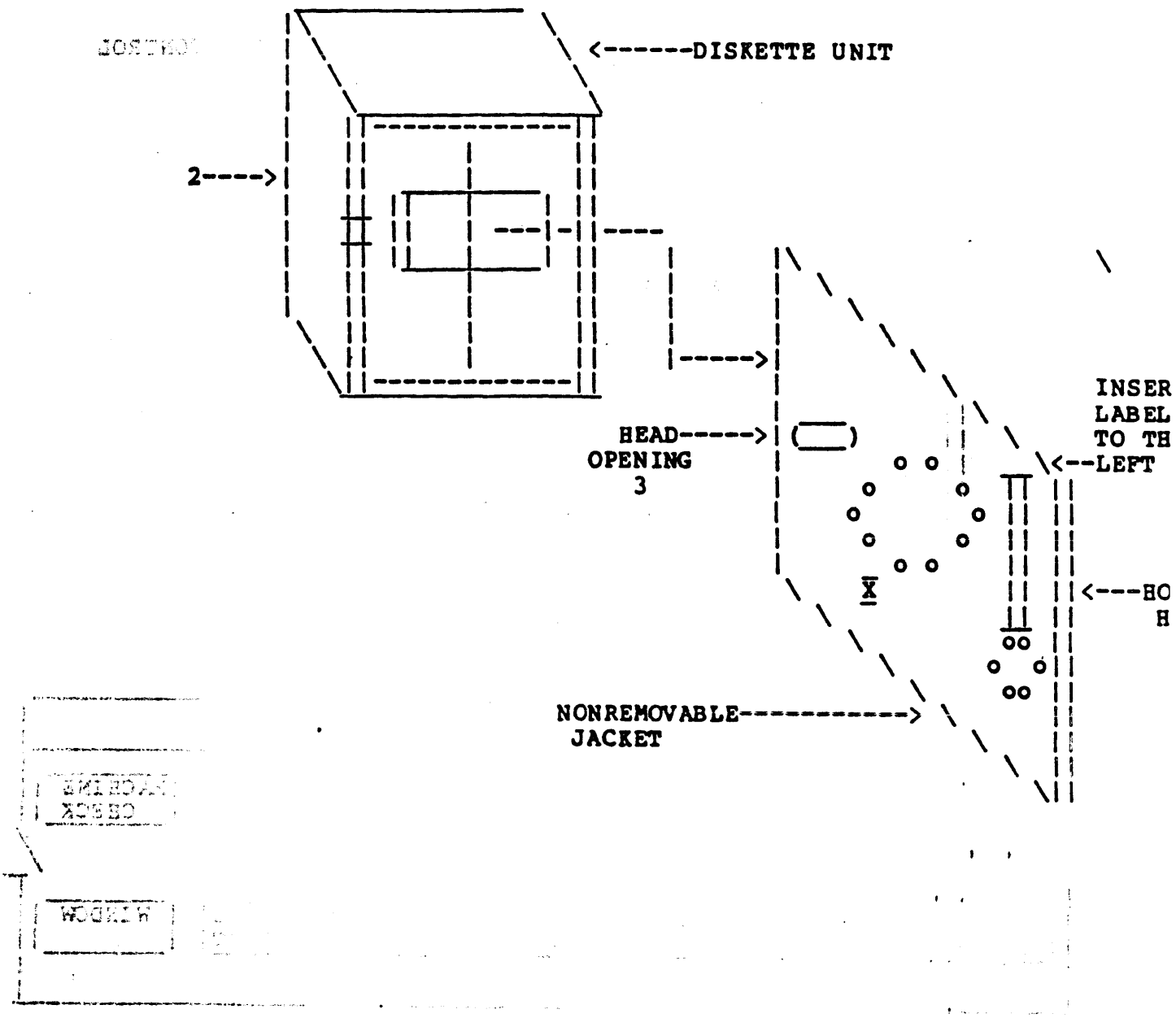

EQUIPMENT OPERATION

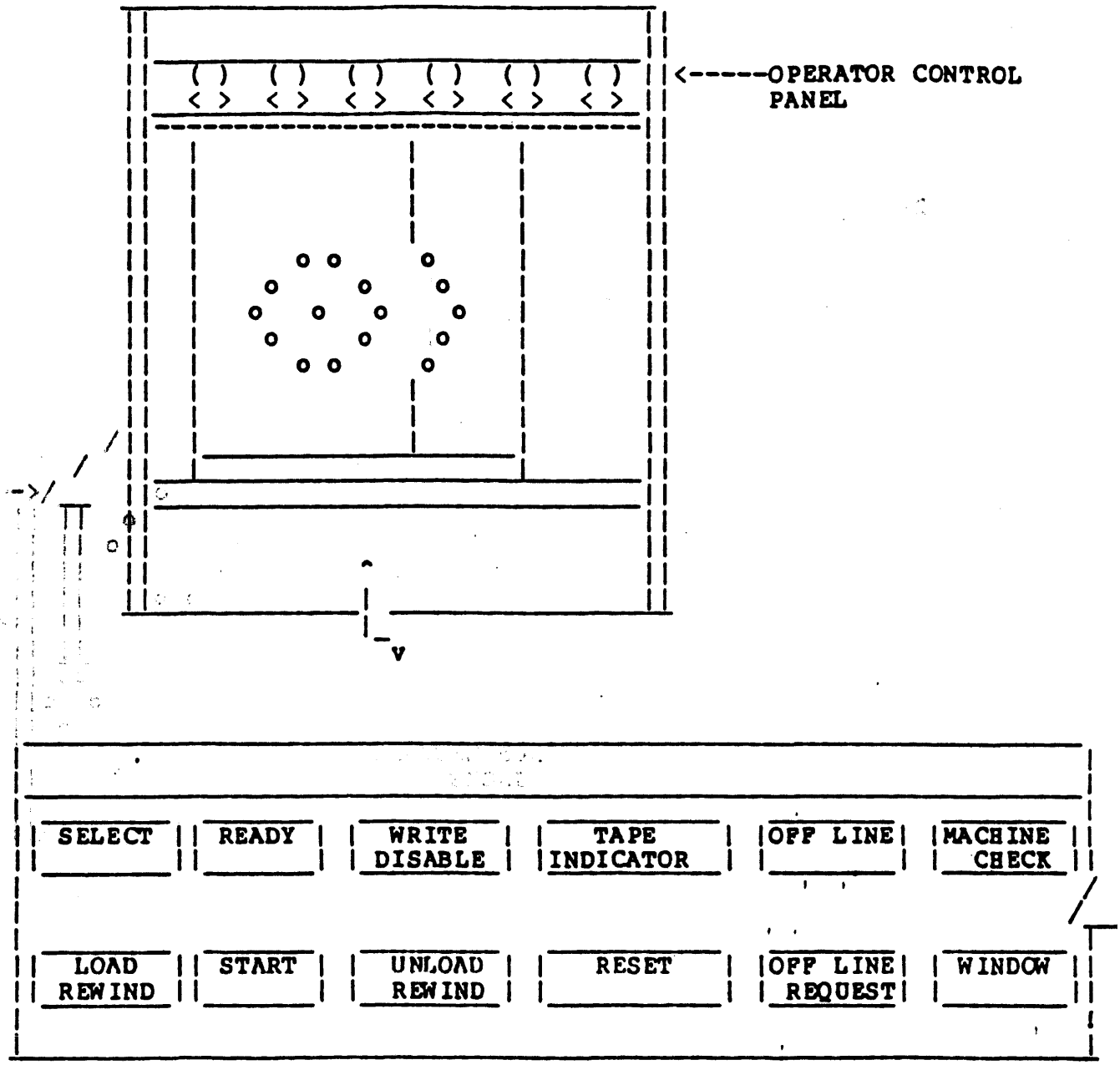

OPERATOR CONTROL PANEL

TAPE UNIT OPERATOR PANELS

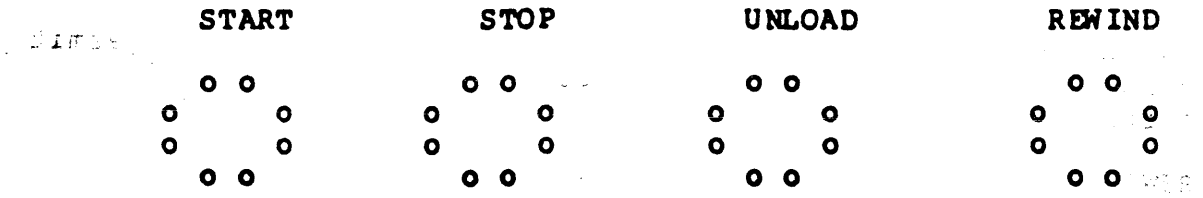

HONEYWELL BULL NATIVE

LOAD REWIND	START	UNLOAD REWIND	RESET	OFFLINE REQUEST	WINDOW

MTU8200 (PIPS TAPE UNIT)

EQUIPMENT OPERATION

The following describes all controls and indicators used by the operator for normal operations.

OPERATOR CONTROL PANEL

The operator control panel (Figure 3-1) contains switches to permit operation of the tape unit and indicators to provide tape unit status information.

LOAD/REWIND

If the tape unit is not already loaded, pressing the LOAD/REWIND switch closes the window, latches the file hub, and initiates the automatic thread/load operation. If the tape unit is loaded, pressing the LOAD/REWIND switch initiates a rewind to BOT. The switch is operational only when the READY and MACHINE CHECK indicators are not illuminated.

START

Pressing the START switch enables the tape unit to accept commands from the tape control unit (TCU), provided that the tape unit is loaded (READY STATUS). If the tape unit is performing a thread/load operation when the START switch is pressed, the tape unit enters READY STATUS when the tape reaches BOT.

REWIND/UNLOAD

If tape is present in the columns, pressing the REWIND/UNLOAD switch initiates a high speed rewind to BOT. When BOT is detected, the tape unloads on to the file reel. This conditions the power window, cartridge, and file hub to allow removal of the file reel. The switch is operational only when the READY and MACHINE CHECK indicators are not illuminated.

RESET

Pressing the RESET switch ends the tape unit READY STATUS, allowing the use of the other operator control panel switches.

Pressing the RESET switch also clears a machine check if the condition causing the check is no longer present.

EQUIPMENT OPERATION

Pressing the RESET switch once during a high-speed rewind operat: slows the tape to normal tape speed. Pressing RESET a second ti stops the tape completely. Pressing RESET during a rewind/unloa operation affects rewind as described, and unload is either prevented or is halted if already in progress by the disabling o both the pneumatics and reels systems.

Pressing the RESET during a load operation terminates the operat: leaving the tape unit in one of two possible states: If tape is loaded into columns, RESET halts the search for BOT but keeps th pneumatics and reels systems enabled (pressing the REWIND switch resumes the search for BOT). If tape is not loaded into the columns, pressing RESET disables both pneumatics and reel system

OFFLINE REQUEST

The OFFLINE REQUEST switch determines tape unit availability to channel. If the tape unit is in Offline Status, pressing the OFFLINE REQUEST changes the tape unit to Offline Status followin the completion of the current command.

WINDOW

If the tape unit is unloaded and the window is in the down posit: pressing the WINDOW switches causes the window to move to the up position, provided there are no obstructions.

If the tape unit is unloaded and the window is in the up positio pressing the WINDOW switch causes the window to move to the down position, provided there are no obstructions.

SELECT Indicator (WHITE)

Illumination of SELECT indicates that the tape unit has been selected for use by the TCU.

READY Indicator (GREEN)

Illumination of READY indicates that the tape unit is loaded wit tape and is in Ready Status.

WRITE DISABLE Indicator (RED)

WRITE DISABLE illuminates when the tape unit is not in Ready Sta or when a write permit ring is not in place on the file reel. T write operation is prohibited when the write permit ring is abse

THIS PAGE INTENTIONALLY LEFT BLANK

EQUIPMENT OPERATION

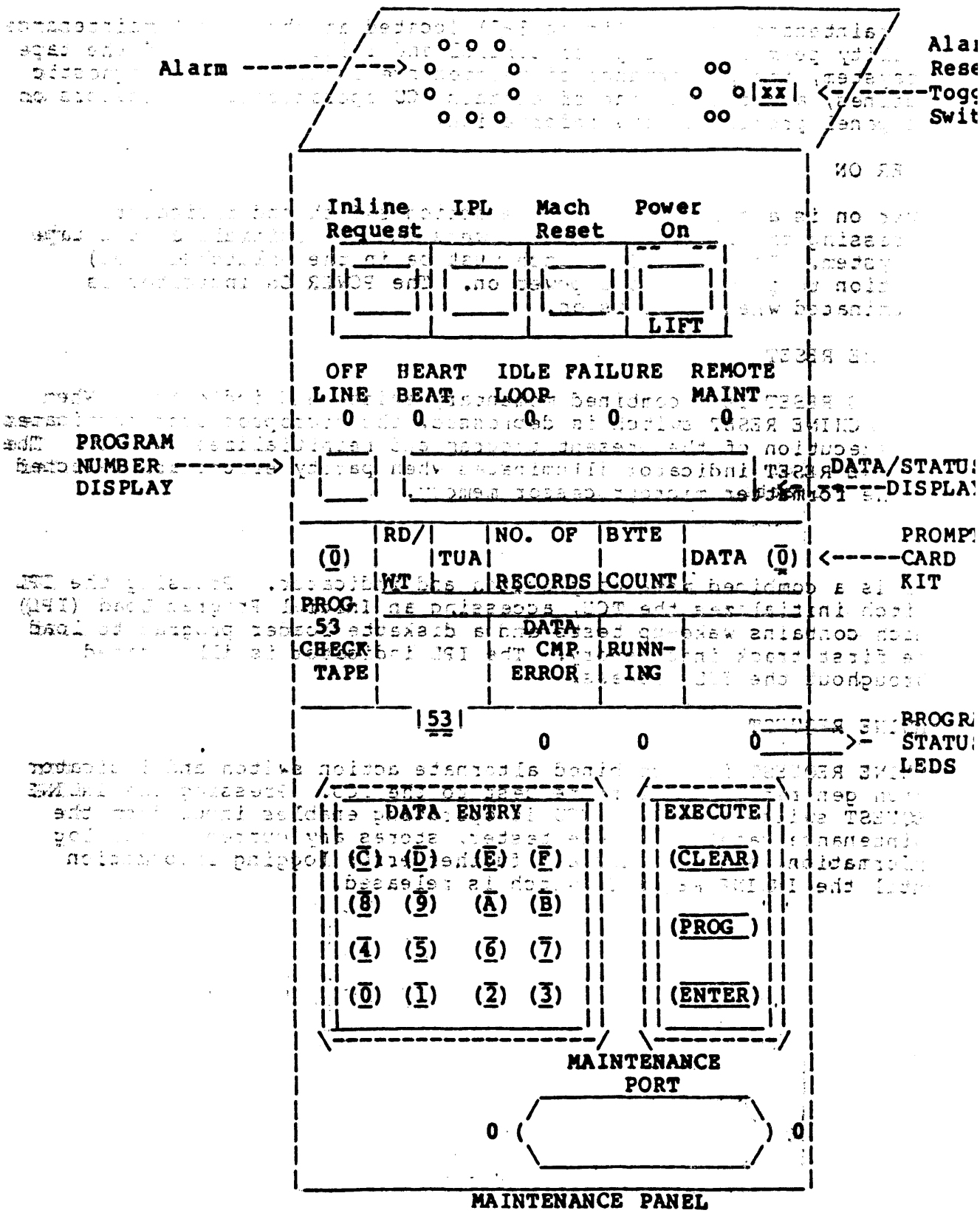

EQUIPMENT OPERATION

MAINTENANCE PANEL

The maintenance panel (Figure 3-2) located at the A unit maintenance facility permits local power control and initialization of the tape subsystem, the performance of maintenance functions and diagnostic routines, and the forcing of certain TCU operations. Indicators on the panel provide status information.

POWER ON

Power on is a combined alternate action switch and indicator. Depressing the POWER ON switch powers on and initializes the tape subsystem. The POWER ON switch must be in the unlatched (out) position to permit remote power on. The POWER ON indicator is illuminated when power is on.

MACHINE RESET

MACHINE RESET is a combined momentary switch and indicator. When the MACHINE RESET switch is depressed, the microprocessor terminates the execution of the present program and reinitializes the TCU. The MACHINE RESET indicator illuminates when parity errors are detected in the formatter microprocessor memory.

IPL

IPL is a combined momentary switch and indicator. Pressing the IPL switch initializes the TCU, accessing an Initial Program Load (IPL) which contains wake-up tests and a diskette loader program to load the first track into memory. The IPL indicator is illuminated throughout the IPL process.

INLINE REQUEST

INLINE REQUEST is a combined alternate action switch and indicator which generates an inline request to the TCU. Pressing the INLINE REQUEST switch while the TCU is operating enables input from the maintenance panel or remote tester, stores any current error log information, and prevents any further error logging information until the INLINE REQUEST switch is released.

EQUIPMENT OPERATION

At IPL, the status of Inline Request determines whether the TCU w be brought online. If INLINE REQUEST is on, the TCU is not broug online and the OFFLINE indicator is illuminated. If INLINE REQUE is off, the TCU is brought online.

The INLINE REQUEST indicator illuminates when the INLINE REQUEST switch is pressed.

OFFLINE

The OFFLINE indicator illuminates when the TCU is offline to the channel.

HEARTBEAT

The HEARTBEAT indicator is illuminated when the TCU is operating. The HEARTBEAT indicator is controlled by a subroutine of the operating system microcode. If the subroutine is not accessed within a given time limit, a delay times out, the indicator is extinguished, and an alarm is sounded. Pressing the IPL switch starts the program and illuminates the HEARTBEAT indicator.

FAILURE

The FAILURE indicator illuminates when a Unit Check is detected. The FAILURE does not illuminate during an IPL sequence failure.

REMOTE MAINTENANCE

The REMOTE MAINTENANCE indicator illuminates when a Detached Diagnostic Device or acoustic coupler is connected and data is b transferred across the maintenance port.

PROGRAM NUMBER DISPLAY

The PROGRAM NUMBER DISPLAY is a two-digit display that indicates number of the current maintenance panel program or an IPL error code.

EQUIPMENT OPERATION

DATA/STATUS DISPLAY

The DATA/STATUS DISPLAY is an eight-character display which indicates variable program data and test status for maintenance panel programs. Field delimiters are displayed as periods; dashes are displayed in areas not being used.

AUDIBLE ALARM

This alarm is used during remote maintenance activities to signal the operator that the activity has been completed.

ALARM RESET TOGGLE SWITCH

The ALARM RESET toggle switch is used to turn off the audible alarm.

PROMPT CARD KIT, PROGRAM STATUS LEDS, and DATA ENTRY KEYPAD

These items are to be used by the Customer Engineer only.

FILE PROTECTION

Unintentional writing on magnetic tape is prevented by removing the write permit ring (Figure 3-3) from a tape reel when operating instructions so dictate.

ALERT CONDITIONS AND RECOVERY PROCEDURES

The following is a list of alert conditions and the correspondi
recovery procedures. If the appropriate recovery procedures fa
resolve the symptom, notify the service representative.

SYMPTOM	POSSIBLE CAUSE(S)	RECOVERY PROCEDURE
Faulty Load	Tape does not exit cartridge.	1. Open front door. 2. Remove cartridge fr unit. 3. Open cartridge and remove tape feel. 4. Manually straighten of tape and check t leader for damage. 5. Insert tape reel in cartridge and ensur that tape end is in position with refer to the opening on cartridge, which is approximately at th to 5 o'clock positi 6. Close cartridge. 7. Remount cartridge o unit. 8. Close front door. 9. Retry loading proce
	Tape fails to reach take-up reel and MACHINE CHECK lights	1. Open front door. 2. Check tape path for obstruction. 3. Check tape leader f damage. 4. Ensure loop pocket is tightly closed. 5. Close front door. 6. Retry loading proce

ALERT CONDITIONS AND RECOVERY PROCEDURES

SYMPTOM	POSSIBLE CAUSE(S)	RECOVERY PROCEDURE
Tape winds onto take-up reel for 20 seconds without detecting BOT. Tape loops are not seen, and MACHINE CHECK lights due to:	o Mispositioned BOT marker, i.e., less than 8 ft. or more than 26 ft. from tip o BOT marker missing.	1. Open front door. 2. Wind tape back onto file reel. 3. Remove tape reel from unit. 4. Properly install BOT marker. 5. Check leader length. 6. Remount tape reel. 7. Close front door. 8. Retry loading procedure.
Cartridge Failures	Fails to open.	1. Press UNLOAD button. 2. Check cartridge opening pin: - If pin is visible in counter-clockwise (closed) position, remove and remount cartridge ensuring opening pin and opening hole are mated properly. - If pin is in clockwise (open) position, move pin to the counter-clockwise (closed) position. 3. Retry loading procedure.
	Fails to close.	1. Press UNLOAD 2. Manually close cartridge.
	Closes over tape.	1. Press UNLOAD button. 2. Manually open cartridge. 3. Retry loading/unloading procedure.

TABLE 1-1. MAINTENANCE PANEL DISPLAYS

ERROR DISPLAY	DEFINITION
IPL Error Codes:	
03	Interim TU and TCU communicator feature incompatibil
06	TU does not toggle Write Status on a Sense Command
11	Error log floppy error
12	Dumb terminal floppy error
13	Maintenance panel or 3920/25 Monitor floppy error
2X	No data compare on a TU download after two attempts
3X	TU does not exit from IPL mode after download
4X	Floppy access error on TU code sectors
5X	No return from TU of data byte on download
6X	TU not configured to 125 or 200 ips
7X	No response from TU to a Sense command when configur
8X	Incompatible TCU and TU microprogram levels
90	Floppy access error
95	ICA IPL failure
98	ICA IPL failure: One channel configured for high or addressing: the other channel configured for low or addressing

X = Tape Unit Address

Return Codes:

F0	Floppy error in functional microcode
F1	Floppy error in error log
F2	Floppy error in diagnostic test
F3	Floppy error in maintenance panel program
F4	Program with the number entered does not exist
F5	Function attempted is not allowed online
F6	An input value is out of the range allowed
F7	Execution of a maintenance buffer command attempted all commands have been executed

GLOSSARY - I

BOT	**Beginning of Tape**
BPI	**Bits Per Inch**
EOT	**End of Tape**
IPL	**Initial Program Load**
IPS	**Inches Per Second**
LED	**Light Emitting Diode**
PROM	**Programmable Read Only Memory**
TCU	**Tape Control Unit**
TU	**Tape Unit**

MEMONICS-TERMINOLOGY-ACHRONYMS

ADTECH	ADvanced TECHnology
ASR	Auxiliary Shift Register
CACHE	Memory in CPU which contains duplicate data from me
CLK	Clock
CML	Current Mode Logic
CMOS	Complimentary Metal Oxide Semiconductor
CONS	Console
CPU	Central Processor Unit
CSP	Control Service Processor
CSR	Command Shift Register
CU	Control Unit
DAI	Direct Adapter Interface
DI	Direct Interface
DIA	Direct Interface Adapter
DMA	Direct Memory Access
DMS	Distributed Maintenance System
DPM	Diagnostic Procedure Module
DRAM	Dynamic Random Access Memory
DSR	Diagnostic Shift Register
EA	Effective Address
ECS	Execution Unit Control Store
EDAC	Error Detection And Correction
ELS	Entry Level System
EPROM	Electrically Programmable Read Only Memory
EU	Execution Unit
FD	Floppy Disk

MNEMONICS-TERMINOLOGY-ACRONYMS

FEP	Front End Processor
FIPS	Federal Information Processing Standard
FNP	Front End Network Processor
HML	Hardware Manipulation Language
ICC	Inter-Computer Controller
ICP	Initial Character Position
IMX	Information Multiplexer
IMXC	Information Multiplexer Channel
I/O	Input/Output
IPC	Integrated Peripheral Controller
LC	Logical Channel
LSI	Large Scale Integration
MC	Master Console
MCA	Maintenance Channel Adapter
MDI	Multidrop Interface
MDR	Micro Diagnostic Routine
MIPS	Millions of Instructions Per Second
MEM	MEMory
MOS	Metal Oxide Semiconductor
NDIC	New Direct Interface Channel (for FEP)
NFT	Native Fault Test
ORU	Optimum Replacement Unit
OS	Operating System
PATROL	Processor Automatic Test Routine Online
PROM	Programmable Read Only Memory
PSI-2	PSI 2-Trip Protocol
PSI-4	PSI 4-Trip Protocol

PSIA Peripheral Subsystem Interface Adapter
PSIA Peripheral Subsystem Interface Adapter
PSIA-2 PSIA for PSI-2
PSIA-2 PSIA for PSI-2
PSIA-4 PSIA for PSI-4
PSIA-4 PSIA for PSI-4
RMI Remote Maintenance Interface
RMI Remote Maintenance Interface
SCD System Clock Distribution
SCD System Clock Distribution
SCL Shift Control Logic
SCL Shift Control Logic
SCU System Control Unit
SCU System Control Unit
SMI Serial Maintenance Interface
SMI Serial Maintenance Interface
SP Service Processor
SP Service Processor
SU Scientific Unit
SU Scientific Unit
TAC Technical Assistance Center
TAC Technical Assistance Center
TARGET End Point For NFT/SMI Operation
TARGET End Point For NFT/SMI Operation
T&D Test & Diagnostic
T&D Test & Diagnostic
TTL Transister-Transistor Logic
TTL Transister-Transistor Logic
UCD Unit Clock Distribution
UCD Unit Clock Distribution
UR Unit Record
UR Unit Record
USART Universal Synchronous/Asynchronous Receiver/Transmit
USART Universal Synchronous/Asynchronous Receiver/Transmit
VLSI Very Large Scale Integration
VLSI Very Large Scale Integration
VMS Virtual Memory and Security
VMS Virtual Memory and Security
WD Winchester Disk
WD Winchester Disk