Texas Instruments

TMS320C5x General-Purpose Applications

User's Guide

1997

Digital Signal Processing Solutions

Printed in U.S.A., July 1997
D415015-9761 revision *

SPRU164

User's Guide

TMS320C5x General-Purpose Applications

1997

TMS320C5x General-Purpose Applications User's Guide

Literature Number: SPRU164
Manufacturing Part Number: D415015-9761 revision *
July 1997

PRINTED WITH SOY INK™

TEXAS INSTRUMENTS

Printed on Recycled Paper

IMPORTANT NOTICE

Texas Instruments (TI) reserves the right to make changes to its products or to discontinue any semiconductor product or service without notice, and advises its customers to obtain the latest version of relevant information to verify, before placing orders, that the information being relied on is current.

TI warrants performance of its semiconductor products and related software to the specifications applicable at the time of sale in accordance with TI's standard warranty. Testing and other quality control techniques are utilized to the extent TI deems necessary to support this warranty. Specific testing of all parameters of each device is not necessarily performed, except those mandated by government requirements.

Certain applications using semiconductor products may involve potential risks of death, personal injury, or severe property or environmental damage ("Critical Applications").

TI SEMICONDUCTOR PRODUCTS ARE NOT DESIGNED, INTENDED, AUTHORIZED, OR WARRANTED TO BE SUITABLE FOR USE IN LIFE-SUPPORT APPLICATIONS, DEVICES OR SYSTEMS OR OTHER CRITICAL APPLICATIONS.

Inclusion of TI products in such applications is understood to be fully at the risk of the customer. Use of TI products in such applications requires the written approval of an appropriate TI officer. Questions concerning potential risk applications should be directed to TI through a local SC sales office.

In order to minimize risks associated with the customer's applications, adequate design and operating safeguards should be provided by the customer to minimize inherent or procedural hazards.

TI assumes no liability for applications assistance, customer product design, software performance, or infringement of patents or services described herein. Nor does TI warrant or represent that any license, either express or implied, is granted under any patent right, copyright, mask work right, or other intellectual property right of TI covering or relating to any combination, machine, or process in which such semiconductor products or services might be or are used.

Copyright © 1997, Texas Instruments Incorporated

Preface

Read This First

About This Manual

This user's guide serves as a reference book for developing hardware and/or software applications for the TMS320C5x digital signal processors (DSPs).

How to Use This Manual

The following table summarizes the 'C5x information contained in this user's guide:

If you are looking for information about:	Turn to:
Application reports	Appendix C, *Application Reports and Designer's Notebook Pages*
Designer's notebook pages	Appendix C, *Application Reports and Designer's Notebook Pages*
DSP features	Chapter 1, *Introduction*
External memory interfacing	Chapter 3, *External Memory interface*
Extended-precision arithmetic subroutines	Chapter 2, *Software Applications*
Fast Fourier transform subroutine	Chapter 2, *Software Applications*
Floating-point arithmetic subroutines	Chapter 2, *Software Applications*
Hardware applications	Chapter 3, *Analog Interface Peripherals and Applications*
Infinite impulse response (IIR) filter subroutines	Chapter 2, *Software Applications*
Memory-to-memory block move subroutines	Chapter 2, *Software Applications*
Modem applications	Chapter 2, *Software Applications*
	Chapter 4, *Analog Interface Peripherals and Applications*

If you are looking for information about:	Turn to:
Multimedia applications	Chapter 4, *Analog Interface Peripherals and Applications*
PACK and UNPACK subroutines	Chapter 2, *Software Applications*
Part order information	Appendix B, *Development Support and Part Order Information*
Processor initialization subroutine	Chapter 2, *Software Applications*
Servo control/disk drive applications	Chapter 4, *Analog Interface Peripherals and Applications*
Software applications	Chapter 2, *Software Applications*
Speech synthesis applications	Chapter 4, *Analog Interface Peripherals and Applications*
Telecommunications applications	Chapter 4, *Analog Interface Peripherals and Applications*
XDS510 emulator	Appendix A, *Design Considerations for Using XDS510 Emulator*

Notational Conventions

This document uses the following conventions:

- Program listings and program examples are shown in a `special typeface`.

  Here is a segment of a program listing:

  ```
  OUTPUT:
        LDP      #6          ;data page 6
        BLDD     #300, 20h   ;move data at address 300h to 320h
        RET
  ```

- In syntax descriptions, the instruction is in a **bold typeface** and parameters are in an *italic typeface*. Portions of a syntax in **bold** must be entered as shown; portions of a syntax in *italics* describe the type of information that you specify. Here is an example of an instruction syntax:

  [*label*] **BLDD** *src, dst*

  BLDD is the instruction and has two parameters, *src* and *dst*. When you use **BLDD**, the first parameter must be an actual data memory source address and *dst* a destination address. A comma and a space (optional) must separate the two addresses.

- The term OR is used in the assembly language instructions to denote a Boolean operation. The term or is used to indicate selection. Here is an example of an instruction with OR and or:

  lk OR (src) → src or [, dst]

  This instruction ORs the value of lk with the contents of src. Then, it stores the result in src or dst, depending on the syntax of the instruction.

- Square brackets, [and], identify an optional parameter. If you use an optional parameter, specify the information within the brackets; do not type the brackets themselves. In the example above, instead of typing [*label*], you specify a name for the label. When you specify more than one optional parameter from a list, you separate them with a comma and a space.

- Braces, { and }, indicate a list. Unless the list is enclosed in square brackets, you must choose one item from the list; do not type the braces themselves. Here's an example of a list that provides seven choices:

  `ind: { * *+ *- *0+ *0- *BRO+ *BRO-}`

- The term 'C5x refers to the TMS320C5x.

Related Documentation from Texas Instruments

The following books describe the 'C5x and related support tools. To obtain a copy of any of these TI documents, call the Texas Instruments Literature Response Center at (800) 477–8924. When ordering, please identify the book by its title and literature number.

TMS320C5x User's Guide (literature number SPRU056) describes the 'C5x 16-bit, fixed-point, general-purpose digital signal processors. Covered are its architecture, internal register structure, instruction set, pipeline, specifications, DMA, I/O ports, and on-chip peripherals.

TMS320C5x, TMS320LC5x Digital Signal Processors (literature number SPRS030) data sheet contains the electrical and timing specifications for these devices, as well as signal descriptions and pinouts for all of the available packages.

Calculation of TMS320C5x Power Dissipation (literature number SPRA030). This application report describes techniques for analyzing system and device conditions to determine operating current levels. From this analysis, power dissipation for the device can be determined. Knowledge of power dissipation can, in turn, be used to determine thermal management requirements for the device.

Telecommunications Applications With the TMS320C5x DSPs (literature number SPRA033). This application book is a collection of DSP applications related to the field of telecommunications and implemented on the TMS320C5x. Topics covered are digital cellular systems, speech synthesis, error-correction coding, baseband modulation and demodulation, equalization and channel estimation, speech and character recognition algorithms, and system design considerations.

PCMCIA TMS320 DSP MediaCard (literature number SPRA052). This application report describes the DSP MediaCard, version 1.0, how it operates, and how to use it. The DSP MediaCard is a card for sound and fax/modem applications, and it uses a TMS320 DSP and on-board stereo codec.

Use of the TMS320C5x Internal Oscillator With External Crystals or Ceramic Resonators (literature number SPRA054). This application report provides information about crystal and ceramic resonators, their frequency characteristics, a general background on oscillators, and the type of oscillator circuit used on the TMS320C5x. Covered are design aspects of the ’C5x oscillator including appropriate configuration of the external components, measured parameters for the on-board portion of the circuitry, use of the oscillator with overtone crystals, and general design considerations for choosing the external components for the oscillator. This report presents some design solutions for common frequencies.

Enhanced Control of an Alternating Current Motor Using Fuzzy Logic and a TMS320 Digital Signal Processor (literature number SPRA057). This application report describes how the use of a digital signal processor with a specialized fuzzy logic software kernel provides the required computing performance for a control system design while maintaining a low cost. This report presents a fuzzy logic design that enhances the system’s ability to handle the abrupt momentum changes of an ac motor controller and the software technology used to implement the fuzzy logic design.

Improving 32-Channel DTMF Decoders Using the TMS320C5x (literature number SPRA085). This application report discusses improvements that you can make to a multichannel dual-tone multifrequency (DTMF) decoder by using a TMS320C5x. PBX systems use multiple DTMF chips to encode or decode tones. PBX systems also perform other functions, such as voice compression or expansion and voice mail. By using a ’C5x, you can increase the performance and flexibility of the PBX systems, while decreasing the cost of the systems.

Digital Signal Processing Applications with the TMS320 Family, Volumes 1, 2, and 3 (literature numbers SPRA012, SPRA016, SPRA017) Volumes 1 and 2 cover applications using the ’C10 and ’C20 families of fixed-point processors. Volume 3 documents applications using both fixed-point processors, as well as the ’C30 floating-point processor.

TMS320C1x/C2x/C2xx/C5x Code Generation Tools Getting Started Guide (literature number SPRU121) describes how to install the TMS320C1x, TMS320C2x, TMS320C2xx, and TMS320C5x assembly language tools and the C compiler for the ’C1x, ’C2x, ’C2xx, and ’C5x devices. The installation for MS-DOS™, OS/2™, SunOS™, and Solaris™ systems is covered.

TMS320C1x/C2x/C2xx/C5x Assembly Language Tools User’s Guide (literature number SPRU018) describes the assembly language tools (assembler, linker, and other tools used to develop assembly language code), assembler directives, macros, common object file format, and symbolic debugging directives for the ’C1x, ’C2x, ’C2xx, and ’C5x generations of devices.

TMS320C2x/C2xx/C5x Optimizing C Compiler User’s Guide (literature number SPRU024) describes the ’C2x/C2xx/C5x C compiler. This C compiler accepts ANSI standard C source code and produces TMS320 assembly language source code for the ’C2x, ’C2xx, and ’C5x generations of devices.

TMS320C5x C Source Debugger User’s Guide (literature number SPRU055) tells you how to invoke the ’C5x emulator, evaluation module, and simulator versions of the C source debugger interface. This book discusses various aspects of the debugger interface, including window management, command entry, code execution, data management, and breakpoints. It also includes a tutorial that introduces basic debugger functionality.

TMS320C5x Evaluation Module Technical Reference (literature number SPRU087) describes the ’C5x evaluation module, its features, design details and external interfaces.

TMS320C5x Evaluation Module Getting Started Guide (literature number SPRU126) tells you how to install the MS-DOS™, PC-DOS™, and Windows™ versions of the ’C5x evaluation module.

XDS51x Emulator Installation Guide (literature number SPNU070) describes the installation of the XDS510™, XDS510PP™, and XDS510WS™ emulator controllers. The installation of the XDS511™ emulator is also described.

JTAG/MPSD Emulation Technical Reference (literature number SPDU079) provides the design requirements of the XDS510™ emulator controller, discusses JTAG designs (based on the IEEE 1149.1 standard), and modular port scan device (MPSD) designs.

TMS320 DSP Development Support Reference Guide (literature number SPRU011) describes the TMS320 family of digital signal processors and the tools that support these devices. Included are code-generation tools (compilers, assemblers, linkers, etc.) and system integration and debug tools (simulators, emulators, evaluation modules, etc.). Also covered are available documentation, seminars, the university program, and factory repair and exchange.

TMS320 Third-Party Support Reference Guide (literature number SPRU052) alphabetically lists over 100 third parties that provide various products that serve the family of TMS320 digital signal processors. A myriad of products and applications are offered—software and hardware development tools, speech recognition, image processing, noise cancellation, modems, etc.

Related Documents and Technical Articles

If you are an assembly language programmer and would like more information about C or C expressions, you may find this book useful:

The C Programming Language (second edition, 1988), by Brian W. Kernighan and Dennis M. Ritchie, published by Prentice-Hall, Englewood Cliffs, New Jersey.

A wide variety of related documentation is available on DSPs. These references fall into one of the following application categories:

- General-purpose DSP
- Graphics/imagery
- Speech/voice
- Control
- Multimedia
- Military
- Telecommunications
- Automotive
- Consumer
- Medical
- Development support

In the following list, references appear in alphabetical order according to author. The documents contain beneficial information regarding designs, operations, and applications for signal-processing systems; all of the documents provide additional references.

***General-Purpose DSP**:*

1) Antoniou, A., *Digital Filters: Analysis and Design*, New York, NY: McGraw-Hill Company, Inc., 1979.

2) Brigham, E.O., *The Fast Fourier Transform*, Englewood Cliffs, NJ: Prentice-Hall, Inc., 1974.

3) Burrus, C.S., and T.W. Parks, *DFT/FFT and Convolution Algorithms*, New York, NY: John Wiley and Sons, Inc., 1984.

4) Chassaing, R., Horning, D.W., "Digital Signal Processing with Fixed and Floating-Point Processors." *CoED*, USA, Volume 1, Number 1, pages 1–4, March 1991.

5) Defatta, David J., Joseph G. Lucas, and William S. Hodgkiss, *Digital Signal Processing: A System Design Approach*, New York: John Wiley, 1988.

6) Erskine, C., and S. Magar, "Architecture and Applications of a Second-Generation Digital Signal Processor." *Proceedings of IEEE International Conference on Acoustics, Speech, and Signal Processing*, USA, 1985.

7) Essig, D., C. Erskine, E. Caudel, and S. Magar, "A Second-Generation Digital Signal Processor." *IEEE Journal of Solid-State Circuits*, USA, Volume SC–21, Number 1, pages 86–91, February 1986.

8) Frantz, G., K. Lin, J. Reimer, and J. Bradley, "The Texas Instruments TMS320C25 Digital Signal Microcomputer." *IEEE Microelectronics*, USA, Volume 6, Number 6, pages 10–28, December 1986.

9) Gass, W., R. Tarrant, T. Richard, B. Pawate, M. Gammel, P. Rajasekaran, R. Wiggins, and C. Covington, "Multiple Digital Signal Processor Environment for Intelligent Signal Processing." *Proceedings of the IEEE, USA*, Volume 75, Number 9, pages 1246–1259, September 1987.

10) Gold, Bernard, and C.M. Rader, *Digital Processing of Signals*, New York, NY: McGraw-Hill Company, Inc., 1969.

11) Hamming, R.W., *Digital Filters*, Englewood Cliffs, NJ: Prentice-Hall, Inc., 1977.

12) IEEE ASSP DSP Committee (Editor), *Programs for Digital Signal Processing*, New York, NY: IEEE Press, 1979.

13) Jackson, Leland B., *Digital Filters and Signal Processing*, Hingham, MA: Kluwer Academic Publishers, 1986.

14) Jones, D.L., and T.W. Parks, *A Digital Signal Processing Laboratory Using the TMS32010*, Englewood Cliffs, NJ: Prentice-Hall, Inc., 1987.

15) Lim, Jae, and Alan V. Oppenheim, *Advanced Topics in Signal Processing*, Englewood Cliffs, NJ: Prentice- Hall, Inc., 1988.

16) Lin, K., G. Frantz, and R. Simar, Jr., "The TMS320 Family of Digital Signal Processors." *Proceedings of the IEEE*, USA, Volume 75, Number 9, pages 1143–1159, September 1987.

17) Lovrich, A., Reimer, J., *"*An Advanced Audio Signal Processor.*" Digest of Technical Papers for 1991 International Conference on Consumer Electronics*, June 1991.

18) Magar, S., D. Essig, E. Caudel, S. Marshall and R. Peters, "An NMOS Digital Signal Processor with Multiprocessing Capability." *Digest of IEEE International Solid-State Circuits Conference*, USA, February 1985.

19) Morris, Robert L., *Digital Signal Processing Software*, Ottawa, Canada: Carleton University, 1983.

20) Oppenheim, Alan V. (Editor), *Applications of Digital Signal Processing*, Englewood Cliffs, NJ: Prentice-Hall, Inc., 1978.

21) Oppenheim, Alan V., and R.W. Schafer, *Digital Signal Processing*, Englewood Cliffs, NJ: Prentice-Hall, Inc., 1975 and 1988.

22) Oppenheim, A.V., A.N. Willsky, and I.T. Young, *Signals and Systems*, Englewood Cliffs, NJ: Prentice-Hall, Inc., 1983.

23) Papamichalis, P.E., and C.S. Burrus, "Conversion of Digit-Reversed to Bit-Reversed Order in FFT Algorithms." *Proceedings of ICASSP 89*, USA, pages 984–987, May 1989.

24) Papamichalis, P., and R. Simar, Jr., "The TMS320C30 Floating-Point Digital Signal Processor." *IEEE Micro Magazine*, USA, pages 13–29, December 1988.

25) Parks, T.W., and C.S. Burrus, *Digital Filter Design*, New York, NY: John Wiley and Sons, Inc., 1987.

26) Peterson, C., Zervakis, M., Shehadeh, N., *"*Adaptive Filter Design and Implementation Using the TMS320C25 Microprocessor.*" Computers in Education Journal*, USA, Volume 3, Number 3, pages 12–16, July–September 1993.

27) Prado, J., and R. Alcantara, “A Fast Square-Rooting Algorithm Using a Digital Signal Processor.” *Proceedings of IEEE*, USA, Volume 75, Number 2, pages 262–264, February 1987.

28) Rabiner, L.R. and B. Gold, *Theory and Applications of Digital Signal Processing*, Englewood Cliffs, NJ: Prentice-Hall, Inc., 1975.

29) Simar, Jr., R., and A. Davis, “The Application of High-Level Languages to Single-Chip Digital Signal Processors.” *Proceedings of ICASSP 88*, USA, Volume D, page 1678, April 1988.

30) Simar, Jr., R., T. Leigh, P. Koeppen, J. Leach, J. Potts, and D. Blalock, “A 40 MFLOPS Digital Signal Processor: the First Supercomputer on a Chip.” *Proceedings of ICASSP 87*, USA, Catalog Number 87CH2396–0, Volume 1, pages 535–538, April 1987.

31) Simar, Jr., R., and J. Reimer, “The TMS320C25: a 100 ns CMOS VLSI Digital Signal Processor.” *1986 Workshop on Applications of Signal Processing to Audio and Acoustics*, September 1986.

32) Texas Instruments, *Digital Signal Processing Applications with the TMS320 Family*, 1986; Englewood Cliffs, NJ: Prentice-Hall, Inc., 1987.

33) Treichler, J.R., C.R. Johnson, Jr., and M.G. Larimore, *A Practical Guide to Adaptive Filter Design*, New York, NY: John Wiley and Sons, Inc., 1987.

***Graphics/Imagery**:*

1) Andrews, H.C., and B.R. Hunt, *Digital Image Restoration*, Englewood Cliffs, NJ: Prentice-Hall, Inc., 1977.

2) Gonzales, Rafael C., and Paul Wintz, *Digital Image Processing*, Reading, MA: Addison-Wesley Publishing Company, Inc., 1977.

3) Papamichalis, P.E., “FFT Implementation on the TMS320C30.” *Proceedings of ICASSP 88*, USA, Volume D, page 1399, April 1988.

4) Pratt, William K., *Digital Image Processing*, New York, NY: John Wiley and Sons, 1978.

5) Reimer, J., and A. Lovrich, “Graphics with the TMS32020.” *WESCON/85 Conference Record*, USA, 1985.

***Speech/Voice**:*

1) DellaMorte, J., and P. Papamichalis, “Full-Duplex Real-Time Implementation of the FED-STD-1015 LPC-10e Standard V.52 on the TMS320C25.” *Proceedings of SPEECH TECH 89*, pages 218–221, May 1989.

2) Frantz, G.A., and K.S. Lin, “A Low-Cost Speech System Using the TMS320C17.” *Proceedings of SPEECH TECH ’87*, pages 25–29, April 1987.

3) Gray, A.H., and J.D. Markel, *Linear Prediction of Speech*, New York, NY: Springer-Verlag, 1976.

4) Jayant, N.S., and Peter Noll, *Digital Coding of Waveforms*, Englewood Cliffs, NJ: Prentice-Hall, Inc., 1984.

5) Papamichalis, Panos, *Practical Approaches to Speech Coding*, Englewood Cliffs, NJ: Prentice-Hall, Inc., 1987.

6) Papamichalis, P., and D. Lively, "Implementation of the DOD Standard LPC–10/52E on the TMS320C25." *Proceedings of SPEECH TECH '87*, pages 201–204, April 1987.

7) Pawate, B.I., and G.R. Doddington, "Implementation of a Hidden Markov Model-Based Layered Grammar Recognizer." *Proceedings of ICASSP 89*, USA, pages 801–804, May 1989.

8) Rabiner, L.R., and R.W. Schafer, *Digital Processing of Speech Signals*, Englewood Cliffs, NJ: Prentice-Hall, Inc., 1978.

9) Reimer, J.B. and K.S. Lin, "TMS320 Digital Signal Processors in Speech Applications." *Proceedings of SPEECH TECH '88*, April 1988.

10) Reimer, J.B., M.L. McMahan, and W.W. Anderson, "Speech Recognition for a Low-Cost System Using a DSP." *Digest of Technical Papers for 1987 International Conference on Consumer Electronics*, June 1987.

***Control**:*

1) Ahmed, I., "16-Bit DSP Microcontroller Fits Motion Control System Application." *PCIM*, October 1988.

2) Ahmed, I., "Implementation of Self Tuning Regulators with TMS320 Family of Digital Signal Processors." *MOTORCON '88*, pages 248–262, September 1988.

3) Ahmed, I., and S. Lindquist, "Digital Signal Processors: Simplifying High-Performance Control." *Machine Design*, September 1987.

4) Ahmed, I., and S. Meshkat, "Using DSPs in Control." *Control Engineering*, February 1988.

5) Allen, C. and P. Pillay, *"*TMS320 Design for Vector and Current Control of AC Motor Drives.*" Electronics Letters*, UK, Volume 28, Number 23, pages 2188–2190, November 1992.

6) Bose, B.K., and P.M. Szczesny, "A Microcomputer-Based Control and Simulation of an Advanced IPM Synchronous Machine Drive System for Electric Vehicle Propulsion." *Proceedings of IECON '87*, Volume 1, pages 454–463, November 1987.

7) Hanselman, H., "LQG-Control of a Highly Resonant Disc Drive Head Positioning Actuator." *IEEE Transactions on Industrial Electronics*, USA, Volume 35, Number 1, pages 100–104, February 1988.

8) Jacquot, R., *Modern Digital Control Systems*, New York, NY: Marcel Dekker, Inc., 1981.

9) Katz, P., *Digital Control Using Microprocessors*, Englewood Cliffs, NJ: Prentice-Hall, Inc., 1981.

10) Kuo, B.C., *Digital Control Systems*, New York, NY: Holt, Reinholt, and Winston, Inc., 1980.

11) Lovrich, A., G. Troullinos, and R. Chirayil, "An All-Digital Automatic Gain Control." *Proceedings of ICASSP 88*, USA, Volume D, page 1734, April 1988.

12) Matsui, N. and M. Shigyo, *"*Brushless DC Motor Control Without Position and Speed Sensors.*" IEEE Transactions on Industry Applications*, USA, Volume 28, Number 1, Part 1, pages 120–127, January–February 1992.

13) Meshkat, S., and I. Ahmed, "Using DSPs in AC Induction Motor Drives." *Control Engineering*, February 1988.

14) Panahi, I. and R. Restle, *"*DSPs Redefine Motion Control.*" Motion Control Magazine*, December 1993.

15) Phillips, C., and H. Nagle, *Digital Control System Analysis and Design*, Englewood Cliffs, NJ: Prentice-Hall, Inc., 1984.

Multimedia*:*

1) Reimer, J., *"*DSP-Based Multimedia Solutions Lead Way Enhancing Audio Compression Performance.*" Dr. Dobbs Journal*, December 1993.

2) Reimer, J., G. Benbassat, and W. Bonneau Jr., *"*Application Processors: Making PC Multimedia Happen.*" Silicon Valley PC Design Conference*, July 1991.

Military*:*

1) Papamichalis, P., and J. Reimer, "Implementation of the Data Encryption Standard Using the TMS32010." *Digital Signal Processing Applications*, 1986.

***Telecommunications**:*

1) Ahmed, I., and A. Lovrich, “Adaptive Line Enhancer Using the TMS320C25.” *Conference Records of Northcon/86*, USA, 14/3/1–10, September/October 1986.

2) Casale, S., R. Russo, and G. Bellina, “Optimal Architectural Solution Using DSP Processors for the Implementation of an ADPCM Transcoder.” *Proceedings of GLOBECOM ’89*, pages 1267–1273, November 1989.

3) Cole, C., A. Haoui, and P. Winship, “A High-Performance Digital Voice Echo Canceller on a SINGLE TMS32020.” *Proceedings of ICASSP 86*, USA, Catalog Number 86CH2243–4, Volume 1, pages 429–432, April 1986.

4) Cole, C., A. Haoui, and P. Winship, “A High-Performance Digital Voice Echo Canceller on a Single TMS32020.” *Proceedings of IEEE International Conference on Acoustics, Speech and Signal Processing*, USA, 1986.

5) Lovrich, A., and J. Reimer, “A Multi-Rate Transcoder.” *Transactions on Consumer Electronics*, USA, November 1989.

6) Lovrich, A. and J. Reimer, *“*A Multi-Rate Transcoder.*” Digest of Technical Papers for 1989 International Conference on Consumer Electronics*, June 7–9, 1989.

7) Lu, H., D. Hedberg, and B. Fraenkel, “Implementation of High-Speed Voiceband Data Modems Using the TMS320C25.” *Proceedings of ICASSP 87*, USA, Catalog Number 87CH2396–0, Volume 4, pages 1915–1918, April 1987.

8) Mock, P., “Add DTMF Generation and Decoding to DSP– µP Designs.” *Electronic Design*, USA, Volume 30, Number 6, pages 205–213, March 1985.

9) Reimer, J., M. McMahan, and M. Arjmand, “ADPCM on a TMS320 DSP Chip.” *Proceedings of SPEECH TECH 85*, pages 246–249, April 1985.

10) Troullinos, G., and J. Bradley, “Split-Band Modem Implementation Using the TMS32010 Digital Signal Processor.” *Conference Records of Electro/86 and Mini/Micro Northeast*, USA, 14/1/1–21, May 1986.

***Automotive**:*

1) Lin, K., “Trends of Digital Signal Processing in Automotive.” *International Congress on Transportation Electronic (CONVERGENCE ’88*), October 1988.

***Consumer**:*

1) Frantz, G.A., J.B. Reimer, and R.A. Wotiz, “Julie, The Application of DSP to a Product.” *Speech Tech Magazine*, USA, September 1988.

2) Reimer, J.B., and G.A. Frantz, “Customization of a DSP Integrated Circuit for a Customer Product.” *Transactions on Consumer Electronics*, USA, August 1988.

3) Reimer, J.B., P.E. Nixon, E.B. Boles, and G.A. Frantz, “Audio Customization of a DSP IC.” *Digest of Technical Papers for 1988 International Conference on Consumer Electronics*, June 8–10 1988.

***Medical**:*

1) Knapp and Townshend, “A Real-Time Digital Signal Processing System for an Auditory Prosthesis.” *Proceedings of ICASSP 88*, USA, Volume A, page 2493, April 1988.

2) Morris, L.R., and P.B. Barszczewski, “Design and Evolution of a Pocket-Sized DSP Speech Processing System for a Cochlear Implant and Other Hearing Prosthesis Applications.” *Proceedings of ICASSP 88*, USA, Volume A, page 2516, April 1988.

***Development Support**:*

1) Mersereau, R., R. Schafer, T. Barnwell, and D. Smith, “A Digital Filter Design Package for PCs and TMS320.” *MIDCON/84 Electronic Show and Convention*, USA, 1984.

2) Simar, Jr., R., and A. Davis, “The Application of High-Level Languages to Single-Chip Digital Signal Processors.” *Proceedings of ICASSP 88*, USA, Volume 3, pages 1678–1681, April 1988.

Trademarks

DuPont Electronics is a registered trademark of E.I. DuPont Corporation.

HP-UX is a trademark of Hewlett-Packard Company.

IBM, OS/2, and PC-DOS are trademarks of International Business Machines Corporation.

MS and Windows are registered trademarks of Microsoft Corporation.

Solaris and SunOS are trademarks of Sun Microsystems, Inc.

SPARC is a trademark of SPARC International, Inc., but licensed exclusively to Sun Microsystems, Inc.

320 Hotline On-line, TI, XDS510, XDS510PP, XDS510WS, and XDS511 are trademarks of Texas Instruments Incorporated.

VAX and VMS are trademarks of Digital Equipment Corp.

If You Need Assistance . . .

❑ World-Wide Web Sites

TI Online	http://www.ti.com
Semiconductor Product Information Center (PIC)	http://www.ti.com/sc/docs/pic/home.htm
DSP Solutions	http://www.ti.com/dsps
320 Hotline On-line™	http://www.ti.com/sc/docs/dsps/support.htm

❑ North America, South America, Central America

Product Information Center (PIC)	(972) 644-5580		
TI Literature Response Center U.S.A.	(800) 477-8924		
Software Registration/Upgrades	(214) 638-0333	Fax: (214) 638-7742	
U.S.A. Factory Repair/Hardware Upgrades	(281) 274-2285		
U.S. Technical Training Organization	(972) 644-5580		
DSP Hotline	(281) 274-2320	Fax: (281) 274-2324	Email: dsph@ti.com
DSP Modem BBS	(281) 274-2323		

DSP Internet BBS via anonymous ftp to ftp://ftp.ti.com/pub/tms320bbs

❑ Europe, Middle East, Africa

European Product Information Center (EPIC) Hotlines:

Multi-Language Support	+33 1 30 70 11 69	Fax: +33 1 30 70 10 32	Email: epic@ti.com
Deutsch	+49 8161 80 33 11 or +33 1 30 70 11 68		
English	+33 1 30 70 11 65		
Francais	+33 1 30 70 11 64		
Italiano	+33 1 30 70 11 67		
EPIC Modem BBS	+33 1 30 70 11 99		
European Factory Repair	+33 4 93 22 25 40		
Europe Customer Training Helpline		Fax: +49 81 61 80 40 10	

❑ Asia-Pacific

Literature Response Center	+852 2 956 7288	Fax: +852 2 956 2200
Hong Kong DSP Hotline	+852 2 956 7268	Fax: +852 2 956 1002
Korea DSP Hotline	+82 2 551 2804	Fax: +82 2 551 2828
Korea DSP Modem BBS	+82 2 551 2914	
Singapore DSP Hotline		Fax: +65 390 7179
Taiwan DSP Hotline	+886 2 377 1450	Fax: +886 2 377 2718
Taiwan DSP Modem BBS	+886 2 376 2592	

Taiwan DSP Internet BBS via anonymous ftp to ftp://dsp.ee.tit.edu.tw/pub/TI/

❑ Japan

Product Information Center	+0120-81-0026 (in Japan)	Fax: +0120-81-0036 (in Japan)
	+03-3457-0972 or (INTL) 813-3457-0972	Fax: +03-3457-1259 or (INTL) 813-3457-1259
DSP Hotline	+03-3769-8735 or (INTL) 813-3769-8735	Fax: +03-3457-7071 or (INTL) 813-3457-7071
DSP BBS via Nifty-Serve	Type “Go TIASP”	

❑ Documentation

When making suggestions or reporting errors in documentation, please include the following information that is on the title page: the full title of the book, the publication date, and the literature number.

Mail: Texas Instruments Incorporated
Technical Documentation Services, MS 702
P.O. Box 1443
Houston, Texas 77251-1443

Email: comments@books.sc.ti.com

Note: When calling a Literature Response Center to order documentation, please specify the literature number of the book.

Contents

1 Introduction 1-1

Summarizes the features of the TMS320 family of products and presents typical applications. Describes the TMS320C5x DSP and lists its key features.

1.1 TMS320 Family Overview 1-2
1.1.1 History, Development, and Advantages of TMS320 DSPs 1-2
1.1.2 TMS320 Typical Applications 1-4
1.2 TMS320C5x Overview 1-5
1.3 TMS320C5x Key Features 1-7

2 Software Applications 2-1

Describes the use of the TMS320C5x instruction set with particular emphasis on its new features and special applications.

2.1 Processor Initialization 2-2
2.2 Interrupts 2-5
2.3 Software Stack 2-8
2.4 Logical and Arithmetic Operations 2-9
2.4.1 Parallel Logic Unit (PLU) 2-9
2.4.2 Multiconditional Instructions 2-12
2.4.3 Search Algorithm Using CRGT 2-14
2.4.4 Matrix Multiplication Using Nested Loops 2-14
2.5 Circular Buffers 2-17
2.6 Single-Instruction Repeat (RPT) Loops 2-20
2.7 Subroutines 2-24
2.8 Extended-Precision Arithmetic 2-26
2.8.1 Addition 2-26
2.8.2 Subtraction 2-29
2.8.3 Multiplication 2-30
2.8.4 Division 2-35
2.9 Floating-Point Arithmetic 2-39
2.10 Application-Oriented Operations 2-46
2.10.1 Modem Application 2-46
2.10.2 Adaptive Filtering 2-49
2.10.3 Infinite Impulse Response (IIR) Filters 2-52
2.10.4 Dynamic Programming 2-55
2.11 Fast Fourier Transforms 2-57

3 External Memory Interface 3-1

Describes the external interface to program memory, local data memory, and I/O space. Also described is the direct memory access (DMA) in a portable computer configuration.

3.1 External Interface to Program Memory 3-2
3.2 External Interface to Local Data Memory 3-4
3.3 External Interface to Global Data Memory 3-6
3.4 External Interface to I/O Space 3-6
3.5 Direct Memory Access (DMA) in a Personal Computer Configuration 3-7

4 Analog Interface Peripherals and Applications 4-1

Describes the use of the TMS320 DSP in a variety of applications.

4.1 Multimedia Applications 4-2
4.1.1 System Design Considerations 4-2
4.1.2 Multimedia-Related Devices 4-4
4.2 Telecommunications Applications 4-5
4.2.1 System Design Considerations 4-6
4.2.2 Telecommunications-Related Devices 4-8
4.3 Dedicated Speech Synthesis Applications 4-10
4.3.1 System Design Considerations 4-10
4.3.2 Speech Synthesis-Related Devices 4-11
4.4 Servo Control/Disk Drive Applications 4-12
4.4.1 System Design Considerations 4-12
4.4.2 Servo Control/Disk Drive-Related Devices 4-14
4.5 Modem Applications 4-15
4.6 Advanced Digital Electronics Applications for Consumers 4-18
4.6.1 Advanced Television System Design Considerations 4-18
4.6.2 Advanced Digital Electronics-Related Devices 4-20

A Design Considerations for Using XDS510 Emulator A-1

Describes the JTAG emulator cable and how to construct a 14-pin connector on your target system and how to connect the target system to the emulator.

A.1 Cable Header and Signals A-2
A.2 Bus Protocol A-3
A.3 Emulator Cable Pod A-4
A.4 Emulator Cable Pod Signal Timings A-6
A.5 Target System Test Clock A-7
A.6 Configuring Multiple Processors A-8
A.7 Connections Between the Emulator and the Target System A-9
A.7.1 Emulation Signals Not Buffered A-9
A.7.2 Emulation Signals Buffered A-10
A.8 Emulation Timing Calculations A-11

B Development Support and Part Order Information B-1

Provides device part numbers and support tool ordering information for the TMS320C5x and development support information available from TI and third-party vendors.

B.1 Development Support B-2
B.1.1 Software and Hardware Development Tools B-2
B.1.2 Third-Party Support B-2
B.1.3 TMS320C5x DSP Design Workshop B-3
B.1.4 Assistance B-3
B.2 Part Order Information B-4
B.2.1 Device and Development Support Tool Nomenclature B-4
B.2.2 Device Nomenclature B-5
B.2.3 Development Support Tools B-6
B.3 Hewlett-Packard E2442A Preprocessor ’C5x Interface B-8
B.3.1 Capabilities B-8
B.3.2 Logic Analyzers Supported B-8
B.3.3 Pods Required B-9
B.3.4 Termination Adapters (TAs) B-9
B.3.5 Availability B-9

C Application Reports and Designer’s Notebook Pages C-1

Lists the TMS320C5x application reports and the TMS320C5x designer’s notebook pages (DNP) available to you.

Figures

1–1 Evolution of the TMS320 Family 1-3
1–2 Typical Applications for the TMS320 Family 1-4
2–1 32-Bit Addition 2-27
2–2 32-Bit Subtraction 2-29
2–3 16-Bit Integer Multiplication Algorithm 2-31
2–4 32-Bit Multiplication Algorithm 2-32
2–5 16-Bit Integer Division 2-36
2–6 Nth-Order, Direct-Form, Type II, IIR Filter 2-52
2–7 Backtracking With Path History 2-56
2–8 An In-Place DIT FFT With In-Order Outputs and Bit-Reversed Inputs 2-57
2–9 An In-Place DIT FFT With In-Order Inputs but Bit-Reversed Outputs 2-58
3–1 ’C5x Interfacing to External EPROM 3-3
3–2 ’C5x Interfacing to External RAM 3-5
3–3 Global Memory Interface 3-6
3–4 Direct Memory Access in a PC Environment 3-7
4–1 System Block Diagram 4-2
4–2 Multimedia Speech Encoding and Modem Communication 4-3
4–3 TMS320C25 to TLC32047 Interface 4-3
4–4 Generic Telecom Application 4-5
4–5 General Telecom Applications 4-6
4–6 Typical DSP/Combo Interface 4-7
4–7 DSP/Combo Interface Timing 4-8
4–8 Generic Servo Control Loop 4-12
4–9 Disk Drive Control System Block Diagram 4-13
4–10 TMS320C14 to TLC32071 Interface 4-13
4–11 High-Speed V.32bis and Multistandard Modem With the TLC320AC01 AIC 4-17
4–12 Applications Performance Requirements 4-18
4–13 Video Signal Processing Basic System 4-19
4–14 Typical Digital Audio Implementation 4-19
A–1 Header Signals and Header Dimensions A-2
A–2 Emulator Cable Pod Interface A-5
A–3 Emulator Cable Pod Timings A-6
A–4 Target-System Generated Test Clock A-7
A–5 Multiprocessor Connections A-8
A–6 Emulator Connections Without Signal Buffering A-9
A–7 Buffered Signals A-10
B–1 TMS320C5x Device Nomenclature B-5
B–2 TMS320 Development Tool Nomenclature B-6

Tables

1–1 Characteristics of the ’C5x DSPs 1-6
2–1 Conditions for Branch, Call, and Return Instructions 2-12
2–2 Groups for Multiconditional Instructions 2-13
2–3 Bit-Reversal Algorithm for an 8-Point Radix-2 DIT FFT 2-58
4–1 Data Converter ICs 4-4
4–2 Switched-Capacitor Filter ICs 4-4
4–3 Telecom Devices—Codec/Filter ICs 4-9
4–4 Telecom Devices—Transient Suppressor ICs 4-9
4–5 Voice Synthesizers 4-10
4–6 Speech Memories 4-11
4–7 Control Related Devices 4-14
4–8 Modem AFE Data Converters 4-15
4–9 Audio/Video Analog/Digital Interface Devices 4-20
A–1 XDS510 Header Signal Description A-2
A–2 Emulator Cable Pod Timing Parameters A-6
B–1 TMS320C5x Development Support Tools Part Numbers B-7
C–1 TMS320C5x Application Reports C-1
C–2 TMS320C5x Designer’s Notebook Pages C-2

Examples

2–1 Initialization of TMS320C5x 2-3
2–2 Use of INTR Instruction 2-6
2–3 Software Stack Operation 2-8
2–4 Using PLU to Do Unpacking 2-10
2–5 Using PLU to Do Packing 2-11
2–6 Using Multiple Conditions With BCND Instruction 2-13
2–7 Using CRGT and CRLT Instructions 2-15
2–8 Using Nested Loops 2-16
2–9 Use of Circular Addressing 2-18
2–10 Modulo-256 Addressing 2-19
2–11 Memory-to-Memory Block Moves Using RPT with BLDD 2-21
2–12 Memory-to-Memory Block Moves Using RPT with BLDP 2-21
2–13 Memory-to-Memory Block Moves Using RPT with BLPD 2-21
2–14 Memory-to-Memory Block Moves Using RPT with TBLR 2-22
2–15 Memory-to-Memory Block Moves Using RPT with TBLW 2-22
2–16 Memory-to-Memory Block Moves Using RPT with SMMR 2-22
2–17 Memory-to-Memory Block Moves Using RPT with LMMR 2-23
2–18 Square Root Computation Using XC Instruction 2-24
2–19 64-Bit Addition 2-28
2–20 64-Bit Subtraction 2-30
2–21 32-Bit Integer Multiplication 2-33
2–22 32-Bit Fractional Multiplication 2-34
2–23 16-Bit Integer Division Using SUBC Instruction 2-37
2–24 16-Bit Fractional Division Using SUBC Instruction 2-38
2–25 Floating-Point Addition Using SATL and SATH Instructions 2-40
2–26 Floating-Point Multiplication Using BSAR Instruction 2-44
2–27 V.32 Encoder Using Accumulator Buffer 2-47
2–28 Adaptive FIR Filter Using RPT and RPTB Instructions 2-50
2–29 Nth-Order IIR Filter Using RPT and MACD Instructions 2-53
2–30 N Cascaded BiQuad IIR Filter Using LTD and MPYA Instructions 2-54
2–31 Backtracking Algorithm Using Circular Addressing 2-56
2–32 16-Point Radix-2 Complex FFT 2-59
2–33 Bit-Reversed Addressing for an FFT 2-62
2–34 Macros for 16-Point DIT FFT 2-63
2–35 Initialization Routine 2-69

Chapter 1

Introduction

This user's guide provides applications for the TMS320C5x generation of fixed-point digital signal processors (DSPs) in the TMS320 family. The 'C5x DSP provides improved performance over earlier 'C1x and 'C2x generations while maintaining upward compatibility of source code between the devices. The 'C5x central processing unit (CPU) is based on the 'C25 CPU and incorporates additional architectural enhancements that allow the device to run twice as fast as 'C2x devices. Future expansion and enhancements are expected to heighten the performance and range of applications of the 'C5x DSPs.

The 'C5x generation of static CMOS DSPs consists of the following devices:

Device	On-Chip RAM	On-Chip ROM
TMS320C50/LC50	10K words	2K words
TMS320C51/LC51	2K words	8K words
TMS320C52/LC52	1K words	4K words
TMS320C53/LC53	4K words	16K words
TMS320C53S/LC53S	4K words	16K words
TMS320LC56	7K words	32K words
TMS320C57S	7K words	2K words
TMS320LC57	7K words	32K words

Topic **Page**

1.1 TMS320 Family Overview 1-2

1.2 TMS320C5x Overview 1-5

1.3 TMS320C5x Key Features 1-7

1.1 TMS320 Family Overview

The TMS320 family consists of two types of single-chip DSPs: 16-bit fixed-point and 32-bit floating-point. These DSPs possess the operational flexibility of high-speed controllers and the numerical capability of array processors. Combining these two qualities, the TMS320 processors are inexpensive alternatives to custom-fabricated very large scale integration (VLSI) and multichip bit-slice processors. Refer to subsection 1.1.2, *TMS320 Typical Applications*, for a detailed list of applications of the TMS320 family. The following characteristics make this family the ideal choice for a wide range of processing applications:

- Very flexible instruction set
- Inherent operational flexibility
- High-speed performance
- Innovative, parallel architectural design
- Cost-effectiveness

1.1.1 History, Development, and Advantages of TMS320 DSPs

In 1982, Texas Instruments introduced the TMS32010 — the first fixed-point DSP in the TMS320 family. Before the end of the year, *Electronic Products* magazine awarded the TMS32010 the title “Product of the Year”. The TMS32010 became the model for future TMS320 generations.

Today, the TMS320 family consists of these generations (Figure 1–1): ’C1x, ’C2x, ’C2xx, ’C5x, ’C54x, and ’C6x fixed-point DSPs; ’C3x and ’C4x floating-point DSPs; and ’C8x multiprocessor DSPs. Figure 1–1 illustrates the performance gains that the TMS320 family has made over time with successive generations. Source code is upwardly compatible from one fixed-point generation to the next fixed-point generation (except for the ’C54x), and from one floating-point generation to the next floating-point generation. Upward compatibility preserves the software generation of your investment, thereby providing a convenient and cost-efficient means to a higher-performance, more versatile DSP system.

Each generation of TMS320 devices has a CPU and a variety of on-chip memory and peripheral configurations for developing spin-off devices. These spin-off devices satisfy a wide range of needs in the worldwide electronics market. When memory and peripherals are integrated into one processor, the overall system cost is greatly reduced, and circuit board space is saved.

Figure 1–1. Evolution of the TMS320 Family

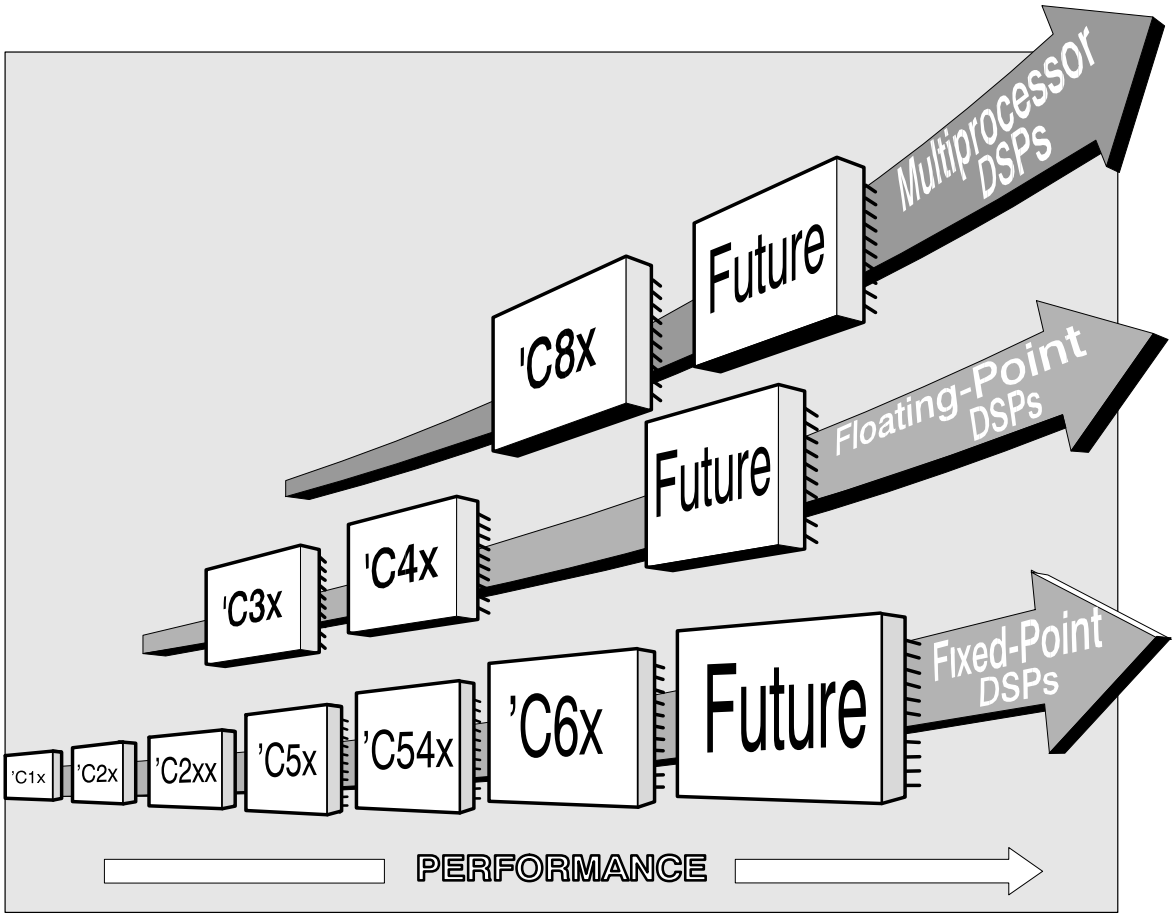

1.1.2 TMS320 Typical Applications

The TMS320 family of DSPs offers better, more adaptable approaches to traditional signal-processing problems, such as vocoding, filtering, and error coding. Furthermore, the TMS320 family supports complex applications that often require multiple operations to be performed simultaneously. Figure 1–2 shows many of the typical applications of the TMS320 family.

Figure 1–2. Typical Applications for the TMS320 Family

Automotive	**Consumer**	**Control**
Adaptive ride control	Digital radios/TVs	Disk drive control
Antiskid brakes	Educational toys	Engine control
Cellular telephones	Music synthesizers	Laser printer control
Digital radios	Power tools	Motor control
Engine control	Radar detectors	Robotics control
Global positioning	Solid-state answering machines	Servo control
Navigation		
Vibration analysis		
Voice commands		
General-Purpose	**Graphics/Imaging**	**Industrial**
Adaptive filtering	3-D rotation	Numeric control
Convolution	Animation/digital map	Power-line monitoring
Correlation	Homomorphic processing	Robotics
Digital filtering	Pattern recognition	Security access
Fast Fourier transforms	Image enhancement	
Hilbert transforms	Image compression/transmission	
Waveform generation	Robot vision	
Windowing	Workstations	
Instrumentation	**Medical**	**Military**
Digital filtering	Diagnostic equipment	Image processing
Function generation	Fetal monitoring	Missile guidance
Pattern matching	Hearing aids	Navigation
Phase-locked loops	Patient monitoring	Radar processing
Seismic processing	Prosthetics	Radio frequency modems
Spectrum analysis	Ultrasound equipment	Secure communications
Transient analysis		Sonar processing
Telecommunications		**Voice/Speech**
1200- to 19200-bps modems	DTMF encoding/decoding	Speech enhancement
Adaptive equalizers	Echo cancellation	Speech recognition
ADPCM transcoders	Fax	Speech synthesis
Cellular telephones	Line repeaters	Speaker verification
Channel multiplexing	Speaker phones	Speech vocoding
Data encryption	Spread spectrum communications	Voice mail
Digital PBXs	Video conferencing	Text-to-speech
Digital speech interpolation (DSI)	X.25 Packet Switching	
Personal digital assistants (PDA)	Personal communications systems (PCS)	

1.2 TMS320C5x Overview

The ’C5x generation consists of the ’C50, ’C51, ’C52, ’C53, ’C53S, ’C56, ’C57, and ’C57S DSPs, which are fabricated by CMOS integrated-circuit technology. Their architectural design is based on the ’C25. The operational flexibility and speed of the ’C5x are the result of combining an advanced Harvard architecture (which has separate buses for program memory and data memory), a CPU with application-specific hardware logic, on-chip peripherals, on-chip memory, and a highly specialized instruction set. The ’C5x is designed to execute up to 50 million instructions per second (MIPS). Spin-off devices that combine the ’C5x CPU with customized on-chip memory and peripheral configurations may be developed for special applications in the worldwide electronics market.

The ’C5x devices offer these advantages:

- Enhanced TMS320 architectural design for increased performance and versatility
- Modular architectural design for fast development of spin-off devices
- Advanced integrated-circuit processing technology for increased performance and low power consumption
- Source code compatibility with ’C1x, ’C2x, and ’C2xx DSPs for fast and easy performance upgrades
- Enhanced instruction set for faster algorithms and for optimized high-level language operation
- Reduced power consumption and increased radiation hardness because of new static design techniques

Table 1–1 lists the major characteristics of the ’C5x DSPs. The table shows the capacity of on-chip RAM and ROM, number of serial and parallel input/output (I/O) ports, power supply requirements, execution time of one machine cycle, and package types available with total pin count. Use Table 1–1 for guidance in choosing the best ’C5x DSP for your application.

Table 1–1. Characteristics of the ’C5x DSPs

TMS320 Device	ID	On-Chip Memory (16-bit words)			I/O Ports		Power Supply (V)	Cycle Time (ns)	Package Type
		DARAM†	SARAM‡	ROM	Serial	Parallel ◊			
’C50	PQ	1056	9K	2K§	2¶	64K	5	50/35/25	132 pin BQFP○
’LC50	PQ	1056	9K	2K§	2¶	64K	3.3	50/35/25	132 pin BQFP○
’C51	PQ	1056	1K	8K§	2¶	64K	5	50/35/25/20	132 pin BQFP○
’C51	PZ	1056	1K	8K§	2¶	64K	5	50/35/25/20	100 pin TQFP☆
’LC51	PQ	1056	1K	8K§	2¶	64K	3.3	50/35/25	132 pin BQFP○
’LC51	PZ	1056	1K	8K§	2¶	64K	3.3	50/35/25	100 pin TQFP☆
’C52	PJ	1056	—	4K§	1	64K	5	50/35/25/20	100 pin QFP□
’C52	PZ	1056	—	4K§	1	64K	5	50/35/25/20	100 pin TQFP☆
’LC52	PJ	1056	—	4K§	1	64K	3.3	50/35/25	100 pin QFP□
’LC52	PZ	1056	—	4K§	1	64K	3.3	50/35/25	100 pin TQFP☆
’C53	PQ	1056	3K	16K§	2¶	64K	5	50/35/25	132 pin BQFP○
’C53S	PZ	1056	3K	16K§	2	64K	5	50/35/25	100 pin TQFP☆
’LC53	PQ	1056	3K	16K§	2¶	64K	3.3	50/35/25	132 pin BQFP○
’LC53S	PZ	1056	3K	16K§	2	64K	3.3	50/35/25	100 pin TQFP☆
’LC56	PZ	1056	6K	32K	2#	64K	3.3	50/35/25	100 pin TQFP☆
’C57S	PGE	1056	6K	2K§	2#	64K‖	5	50/35/25	144 pin TQFPΔ
’LC57	PBK	1056	6K	32K	2#	64K‖	3.3	50/35/25	128 pinTQFP☆

† Dual-access RAM (DARAM)
‡ Single-access RAM (SARAM)
§ ROM bootloader available
¶ Includes time-division multiplexed (TDM) serial port
# Includes buffered serial port (BSP)
‖ Includes host port interface (HPI)
○ $20 \times 20 \times 3.8$ mm bumpered quad flat-pack (BQFP) package
☆ $14 \times 14 \times 1.4$ mm thin quad flat-pack (TQFP) package
□ $14 \times 20 \times 2.7$ mm quad flat-pack (QFP) package
Δ $20 \times 20 \times 1.4$ mm thin quad flat-pack (TQFP) package
◊ Sixteen of the 64K parallel I/O ports are memory mapped.

1.3 TMS320C5x Key Features

Key features of the ’C5x DSPs are listed below. Where a feature is exclusive to a particular device, the device’s name is enclosed within parentheses and noted after that feature.

- Compatibility: Source-code compatible with ’C1x, ’C2x, and ’C2xx devices
- Speed: 20-/25-/35-/50-ns single-cycle fixed-point instruction execution time (50/40/28.6/20 MIPS)
- Power
  - 3.3-V and 5-V static CMOS technology with two power-down modes
  - Power consumption control with IDLE1 and IDLE2 instructions for power-down modes
- Memory
  - 224K-word × 16-bit maximum addressable external memory space (64K-word program, 64K-word data, 64K-word I/O, and 32K-word global memory)
  - 1056-word × 16-bit dual-access on-chip data RAM
  - 9K-word × 16-bit single-access on-chip program/data RAM (’C50)
  - 2K-word × 16-bit single-access on-chip boot ROM (’C50, ’C57S)
  - 1K-word × 16-bit single-access on-chip program/data RAM (’C51)
  - 8K-word × 16-bit single-access on-chip program ROM (’C51)
  - 4K-word × 16-bit single-access on-chip program ROM (’C52)
  - 3K-word × 16-bit single-access on-chip program/data RAM (’C53, ’C53S)
  - 16K-word × 16-bit single-access on-chip program ROM (’C53, ’C53S)
  - 6K-word × 16-bit single-access on-chip program/data RAM (’LC56, ’C57S, ’LC57)
  - 32K-word × 16-bit single-access on-chip program ROM (’LC56, ’LC57)

- Central processing unit (CPU)
  - Central arithmetic logic unit (CALU) consisting of the following:
    - 32-bit arithmetic logic unit (ALU), 32-bit accumulator (ACC), and 32-bit accumulator buffer (ACCB)
    - 16-bit × 16-bit parallel multiplier with a 32-bit product capability
    - 0- to 16-bit left and right data barrel-shifters and a 64-bit incremental data shifter
  - 16-bit parallel logic unit (PLU)
  - Dedicated auxiliary register arithmetic unit (ARAU) for indirect addressing
  - Eight auxiliary registers
- Program control
  - 8-level hardware stack
  - 4-deep pipelined operation for delayed branch, call, and return instructions
  - Eleven shadow registers for storing strategic CPU-controlled registers during an interrupt service routine (ISR)
  - Extended hold operation for concurrent external direct memory access (DMA) of external memory or on-chip RAM
  - Two indirectly addressed circular buffers for circular addressing
- Instruction set
  - Single-cycle multiply/accumulate instructions
  - Single-instruction repeat and block repeat operations
  - Block memory move instructions for better program and data management
  - Memory-mapped register load and store instructions
  - Conditional branch and call instructions
  - Delayed execution of branch and call instructions
  - Fast return from interrupt instructions
  - Index-addressing mode
  - Bit-reversed index-addressing mode for radix-2 fast Fourier transforms (FFTs)

- On-chip peripherals
  - 64K parallel I/O ports (16 I/O ports are memory mapped)
  - Sixteen software-programmable wait-state generators for program, data, and I/O memory spaces
  - Interval timer with period, control, and counter registers for software stop, start, and reset
  - Phase-locked loop (PLL) clock generator with internal oscillator or external clock source
  - Multiple PLL clocking option (x1, x2, x3, x4, x5, x9, depending on the device)
  - Full-duplex synchronous serial port interface for direct communication between the ’C5x and another serial device
  - Time-division multiplexed (TDM) serial port (’C50, ’C51, ’C53)
  - Buffered serial port (BSP) (’LC56, ’C57S, ’LC57)
  - 8-bit parallel host port interface (HPI) (’C57, ’C57S)
- Test/emulation
  - On-chip scan-based emulation logic
  - IEEE JTAG Standard 1149.1 boundary scan logic (’C50, ’C51, ’C53, ’C57S)
- Packages
  - 100-pin quad flat-pack (QFP) package (’C52)
  - 100-pin thin quad flat-pack (TQFP) package (’C51, ’C52, ’C53S, ’LC56)
  - 128-pin TQFP package (’LC57)
  - 132-pin bumpered quad flat-pack (BQFP) package (’C50, ’C51, ’C53)
  - 144-pin TQFP package (’C57S)

Chapter 2

Software Applications

The ’C5x devices maintain source-code compatibility with ’C1x and ’C2x generations and have architectural enhancements that improve performance and versatility. An orthogonal instruction set is augmented by new instructions that support additional hardware and handle data movement and memory-mapped registers. Other features include an independent parallel logic unit (PLU) for performing Boolean operations, a 32-bit accumulator buffer (ACCB), and a set of registers that provide zero-latency context-switching capabilities to interrupt service routines. The on-chip dual-access RAM and memory-mapped register set are enhanced.

This chapter explains the use of the ’C5x instruction set with particular emphasis on its new features and special applications. For a complete discussion of the assembler directives used in this chapter’s examples, consult the *TMS320C1x/C2x/C2xx/C5x Assembly Language Tools User’s Guide*.

Topic **Page**

2.1	**Processor Initialization**	**2-2**
2.2	**Interrupts**	**2-5**
2.3	**Software Stack**	**2-8**
2.4	**Logical and Arithmetic Operations**	**2-9**
2.5	**Circular Buffers**	**2-17**
2.6	**Single-Instruction Repeat (RPT) Loops**	**2-20**
2.7	**Subroutines**	**2-24**
2.8	**Extended-Precision Arithmetic**	**2-26**
2.9	**Floating-Point Arithmetic**	**2-39**
2.10	**Application-Oriented Operations**	**2-46**
2.11	**Fast Fourier Transforms**	**2-57**

2.1 Processor Initialization

Before executing a ’C5x algorithm, it is necessary to initialize the processor. Generally, initialization takes place anytime the processor is reset. The processor is reset by applying a low level to $\overline{RS}$ input; the interrupt vector pointer (IPTR) bits of the processor mode status register (PMST) are all cleared, thus mapping the vectors to page 0 in program memory space. This means that the reset vector always resides at program memory location 0. This location normally contains a branch instruction to direct program execution to the system initialization routine. A hardware reset clears all pending interrupt flags and sets the interrupt mode (INTM) bit in ST0, thereby disabling all interrupts. A hardware reset also initializes various status bits and peripheral registers.

To configure the processor after the reset, the following internal functions must be initialized:

- Memory-mapped core processor and peripheral control registers
- Interrupt structure (INTM bit)
- Mode control (OVM, SXM, PM, AVIS, NDX, TRM bits)
- Memory control (RAM, OVLY, CNF bits)
- Auxiliary registers and the auxiliary register pointer (ARP)
- Data memory page pointer (DP)

The OVM (overflow mode), TC (test/control flag), IMR (interrupt mask register), auxiliary register pointer (ARP), auxiliary register buffer (ARB), and data memory page pointer (DP) are not initialized by reset.

Example 2–1 shows coding for initializing the ’C5x to the following machine state and for the initialization performed after hardware reset:

- Internal single-access RAM configured as program memory
- Interrupt vector table loaded in internal program memory
- Interrupt vector table pointer (IPTR)
- Internal dual-access RAM blocks filled with 0s
- Interrupts enabled

Example 2–1. Initialization of TMS320C5x

```
             .title ’PROCESSOR INITIALIZATION’
             .mmregs
             .ref   ISR0,ISR1,ISR2,ISR3,ISR4,TIME
             .ref   RCV,XMT,TRX,TXMT,TRP,NMISR
*;;;;;;;;;;;;;;;;;;;;;;;;;;;;;;;;;;;;;;;;;;;;;;;;;;;;;;;;;;;;;;;;;;;;;;;;;;;;;;;;
* Processor initialization for TMS320C50.
*
* The memory mapping of S/A RAM in program space and data space is different for
* the ’C5x devices. Therefore, the memory location pointed to by address 0800h
* in data space is mapped to a different address in program space for different
* ’C5x devices. Hence, the IPTR should be loaded with the corresponding value
* to allocate the vector table to the correct program space.
*
*       |   C50   |   C51   |   C53   |   C56   |   C57
*-------+---------+---------+---------+---------+--------
* PMST  |  0081E  |  0201E  |  0401E  |  0801E  |  0801E
*
*;;;;;;;;;;;;;;;;;;;;;;;;;;;;;;;;;;;;;;;;;;;;;;;;;;;;;;;;;;;;;;;;;;;;;;;;;;;;;;;;
V_TBL  .sect  ”vectors”
RESET  B      INIT          ;This section will be loaded in program
                            ;memory address 0h.
INT0   B      ISR0          ;INT0 – begins processing here
INT1   B      ISR1          ;INT1 – begins processing here
INT2   B      ISR2          ;INT2 – begins processing here
INT3   B      ISR3          ;INT3 – begins processing here
TINT   B      TIME          ;Timer interrupt processing
RINT   B      RCV           ;Serial port receive interrupt
XINT   B      XMT           ;Serial port transmit interrupt
TRNT   B      TRX           ;TDM port receive interrupt
TXNT   B      TXMT          ;TDM port transmit interrupt
INT4   B      ISR4          ;INT4 – begins processing here
       .space 14*16         ;14 words
TRAP   B      TRP
NMI    B      NMISR
       .text
INIT   LDP    #0            ;Initialize data pointer
       OPL    #20h,PMST     ;Configure S/A RAM in data memory
       LAR    AR7,#0800h    ;Data space address for vector table
       MAR    *,AR7
       RPT    #39
       BLPD   #V_TBL,*+     ;Load vector table at 0800h
       SPLK   #0081Eh,PMST  ;Now configure S/A RAM in program space
                            ;and initialize vector table pointer
       SPLK   #01FFh,IMR    ;Clear interrupt mask register
       CLRC   OVM           ;Disable overflow saturation mode
       LAR    AR7,#60h      ;Initialize B2 block
       RPTZ   #31
       SACL   *+
```

Example 2–1. Initialization of TMS320C5x (Continued)

```
LAR    AR7,#100h     ;Initialize B0 block
RPTZ   #511
SACL   *+
LAR    AR7,#300h     ;Initialize B1 block
RPTZ   #511
SACL   *+
CLRC   INTM          ;Globally enable interrupts
B      MAIN_PRG      ;Return
```

2.2 Interrupts

The ’C5x devices have four external, maskable, user interrupts ($\overline{\text{INT1}}$–$\overline{\text{INT4}}$) and one nonmaskable interrupt ($\overline{\text{NMI}}$) available for external devices. Internal interrupts are generated by the serial ports, the timer, and by the software interrupt instructions (INTR, TRAP, and NMI). The interrupt structure is described in the *TMS320C5x User’s Guide*.

The ’C5x devices are capable of generating software interrupts using the INTR instruction. This allows any of the 32 interrupt service routines (ISRs) to be executed from your software. The first 20 ISRs are reserved for external interrupts, peripheral interrupts, and future implementations. The remaining 12 locations in the interrupt vector table are user-definable. The INTR instruction can invoke any of the 32 interrupts available on the ’C5x devices.

When an interrupt is executed, certain key CPU registers are saved automatically. The PC is saved on an 8-deep hardware stack, which is also used for subroutine calls. Therefore, the CPU supports subroutine calls within an ISR as long as the 8-level stack is not exceeded. Also, there is a 1-deep stack (or shadow register) for each of the following registers:

- Accumulator (ACC)
- Accumulator buffer (ACCB)
- Auxiliary register compare register (ARCR)
- Index register (INDX)
- Processor mode status register (PMST)
- Product register (PREG)
- Status register 0 (ST0)
- Status register 1 (ST1)
- Temporary register 0 (TREG0) for multiplier
- Temporary register 1 (TREG1) for shift count
- Temporary register 2 (TREG2) for bit test

When the interrupt trap is taken, the contents of all these registers are pushed onto a 1-level stack, with the exception of the the INTM bit in ST0 and the XF bit in ST1. On an interrupt, the INTM bit is always set to disable interrupts. The values in the registers at the time of the interrupt trap are still available to the ISR but are also protected in the shadow registers. The shadow registers are copied back to the CPU registers when the RETI or RETE instruction is executed. This function allows the CPU to be used for the ISR without requiring the overhead of context save and restore in the ISR.

Example 2–2 illustrates the use of the INTR instruction. The foreground program sets up auxiliary registers and invokes user-defined interrupt number 20. Since the context is saved automatically, the ISR is free to use any of the saved registers without destroying the calling program's variables. The routine shown here uses the CRGT instruction to find the maximum value of 16 executions of the equation $Y = aX^2 + bX + c$. AR1 points to the X values, AR2 points to the coefficients, and AR3 points to the Y results. To return the result to the calling routine, all the registers are restored by executing an RETI instruction. The computed value is placed in the accumulator, and a standard return is executed because the stack is already popped.

Example 2–2. Use of INTR Instruction

```
* Foreground Program
       .mmregs
TEMP   .set   63h                   ;Temporary storage.
X      .set   64h
Y      .set   65h
COEFF  .set   66h
V_TBL  .sect  ”vectors”
RESET  B      INIT                  ;This section will be loaded in program
                                    ;memory address 0h.
       .space 38*16                 ;Skip the next 38 locations to interrupt #20
IN20   B      ISR20                 :Interrupt #20 – begins processing here
       .text
INIT   LDP    #0                    ;Initialize data pointer
       LAR    AR1,#X                ;AR1 points to X values
       LAR    AR2,#COEFF            ;AR2 points to coefficients b,a,c in that order
       LAR    AR3,#Y                ;AR3 points to Y results
       INTR   20                    ;Invoke software interrupt #20
       B      $                     ;Finish the program
*;;;;;;;;;;;;;;;;;;;;;;;;;;;;;;;;;;;;;;;;;;;;;;;;;;;;;;;;;;;;;;;;;;;;;;;;;;;;;;;;
*
* This routine uses the block repeat feature of the ’C5x to find the maximum
* value of 16 executions of the equation Y=aX^2+bX+c. The X values are pointed
* at by AR1. The Y results are pointed at by AR3. The coefficients are pointed
* at by AR2. At the completion of the routine, ACC contains the maximum value.
* AR1, AR2, and AR3 are modified. All other registers are unaffected.
*
*;;;;;;;;;;;;;;;;;;;;;;;;;;;;;;;;;;;;;;;;;;;;;;;;;;;;;;;;;;;;;;;;;;;;;;;;;;;;;;;;
ISR20  LDP    #0                    ;Use page 0 of data memory.
       LACC   #08000h
       SACB                         ;Initialize AccB with min. possible value
       MAR    *,AR1                 ;ARP <– AR1
*
* Load Block repeat count register with 15.
       SPLK   #0Fh,BRCR
*
```

Example 2–2. Use of INTR Instruction (Continued)

```
* Repeat Block.
       RPTB   END_LOOP–1          ;For i=0; i<=15; i++.
        ZAP                       ;ACC = PREG = 0
        SQRA  *+,AR2              ;TREG0 = X   PREG = X^2
        SPL   TEMP                ;Save X^2.
        MPY   *+                  ;PREG = b*X
        LTA   TEMP                ;TREG = X^2   ACC = b*X
        MPY   *+                  ;PREG = a*X^2
        APAC                      ;ACC = a*X^2 + b*X
        ADD   *,0,AR3             ;ACC = A*X^2 + b*X + c
        SACL  *+,0,AR1            ;Save Y.
        CRGT                      ;Save maximum Y.
END_LOOP
       SACL   TEMP                ;Save the result temporarily
       LACC   #RE_ENTER
       PUSH                       ;Push re-entry address onto stack
       RETI                       ;Pop all registers
RE_ENTER
       LACC   TEMP                ;Load ACC with the max. value
       RET                        ;Return to interrupted code
```

2.3 Software Stack

The ’C5x has an internal 8-deep hardware stack that is used to save and restore return addresses for the subroutines and the ISRs. Provisions have been made on the ’C5x to extend the hardware stack into the data memory. The PUSH and POP instructions can access the hardware stack via the accumulator. Two additional instructions, PSHD and POPD, are included in the instruction set so that the stack may be directly stored to and recovered from the data memory.

A software stack can be implemented by using the POPD instruction at the beginning of each subroutine to save the PC in data memory. Then, before returning, a PSHD is used to put the proper value back onto the top of the stack.

When the stack has seven values stored on it, and two or more values are to be put on the stack before any other values are popped off, a subroutine that expands the stack is needed. A routine to expand the stack is shown in Example 2–3. In this example, the main program stores the stack, stores the starting memory location in AR2, and indicates to the subroutine whether to push the data from memory onto the stack or pop data from the stack to memory. If a 0 is loaded into the accumulator before calling the subroutine, the subroutine pushes data from memory to the stack. If the accumulator contains a nonzero value, the subroutine pops data from the stack to memory.

Because the CALL instruction uses the stack to save the program counter, the subroutine pops this value into the accumulator and uses the BACC instruction to return to the main program. This prevents the program counter from being stored into a memory location. The subroutine in Example 2–3 uses the BCNDD (delayed conditional branch) instruction to determine whether a save or restore operation is to be performed.

Example 2–3. Software Stack Operation

```
*
* This routine expands the stack while letting the main program determine where
* to store the stack contents, or from where to restore them. Entry Conditions:
* ACC = 0 (restore stack); 1 (save stack)
* AR2 –> Top of software stack in data memory
*
STACK: BCNDD  POP,NEQ      ;Delayed branch if POPD required
        MAR   *,AR2        ;Use AR2 as stack pointer
        POP                ;Get return address
       RPT    #6           ;Repeat 7 times
        PSHD  *+           ;Put memory in stack
       BACC                ;Return to main program
POP:   MAR    *–           ;Align AR2
       RPT    #6           ;Repeat 7 times
        POPD  *–           ;Put stack in memory
       MAR    *+           ;Realign stack pointer
       BACC                ;Return to main program
```

2.4 Logical and Arithmetic Operations

The following subsections provide examples of logical and arithmetic operations.

2.4.1 Parallel Logic Unit (PLU)

The PLU provides a direct logical path to data memory values without affecting the contents of the accumulator or product register. The PLU allows direct manipulation of bits in any location in data memory space. The source operand can be either a long immediate value or the dynamic bit manipulation register (DBMR). The use of a long immediate value is particularly effective in initializing data memory locations, including the memory-mapped registers. The use of the DBMR as the source operand allows run-time computation of operands. It also reduces instruction execution time to one cycle, which may be important for time-critical routines.

Example 2–4 on page 2-10 and Example 2–5 on page 2-11 illustrate the use of the PLU for initialization and logical operation. The UNPACK subroutine (Example 2–4) extracts individual bits from a single word and stores them separately in an array. The PACK subroutine (Example 2–5) does the opposite of UNPACK by getting bits from different locations and packing them in a single word. In Example 2–5, notice that a NOP instruction is inserted in the repeat-block loop. A repeat-block loop must be at least three words long on ’C5x devices.

Example 2–4. Using PLU to Do Unpacking

```
              .title 'Routine to extract bits from a single word'
*      PCKD
*      ----------------
*      |Bn  ------  B0|
*      ----------------
*
*      UNPCKD
*      ----------------
*      |0   --   0 |Bn|
*      ----------------
*      |0   --  0|Bn-1|
*      ----------------
*            . . .
*      ----------------
*      |0   --    0|B0|
*      ----------------
              .mmregs
NO_BITS       .set   16                  ;Number of packed bits in the word
PCKD          .set   60h                 ;Input word
UNPCKD        .set   61h                 ;Output buffer. Each word will have
                                         ;one bit in LSB location.
              .text
UNPACK        LDP    #0                  ;DP=0
              MAR    *,AR0
              LAR    AR0,#UNPCKD+NO_BITS-1 ;End of table address
              SPLK   #NO_BITS-1,BRCR     ;Initialize the count register
              SPLK   #1,DBMR             ;Load mask in DBMR register
              LACC   PCKD                ;Packed bits -> Acc
              RPTB   LOOP-1              ;Begin looping
               SACL  *                   ;Save remaining packed bits
               APL   *-                  ;Keep the LSB only
               SFR                       ;Shift right to eliminate unpacked bit
LOOP          RET                        ;Return back
```

Example 2–5. Using PLU to Do Packing

```
              .title 'Routine to pack input bits in a single word'
*
*      PCKD
*      ----------------
*      |Bn  ------  B0|
*      ----------------
*
*      UNPCKD
*      ----------------
*      |0   --   0 |Bn|
*      ----------------
*      |0   --  0|Bn-1|
*      ----------------
*            . . .
*      ----------------
*      |0   --    0|B0|
*      ----------------
              .data
NO_BITS       .set   16                  ;Number of bits to be packed
PCKD          .set   60h                 ;Packed word
UNPCKD        .set   61h                 ;Array of unpacked bits
              .text
PACK          LAR    AR0,#UNPCKD         ;AR0 points to start of UNPACKED array
              MAR    *,AR0
              LDP    #0                  ;DP=0
              SPLK   #NO_BITS-2,BRCR     ;Loop NO_BITS-1 times
              LACC   *+                  ;Get the MSB
              RPTB   LOOP-1              ;Begin looping
               SFL                       ;Make space for next bit
               ADD   *+                  ;Put next bit
               NOP
LOOP
              SACL   PCKD                ;Store the result
              RET                        ;Return back
```

2.4.2 Multiconditional Instructions

The ’C5x includes instructions that test multiple conditions before passing control to another section of the program. These instructions are: BCND, BCNDD, CC, CCD, RETC, RETCD, and XC. These instructions can test the conditions listed in Table 2–1 individually or in combination with other conditions.

Table 2–1. Conditions for Branch, Call, and Return Instructions

Mnemonic	Condition	Description
EQ	ACC = 0	Accumulator equal to 0
NEQ	ACC ≠ 0	Accumulator not equal to 0
LT	ACC < 0	Accumulator less than 0
LEQ	ACC ≤ 0	Accumulator less than or equal to 0
GT	ACC > 0	Accumulator greater than 0
GEQ	ACC ≥ 0	Accumulator greater than or equal to 0
NC	C = 0	Carry bit cleared
C	C = 1	Carry bit set
NOV	OV = 0	No accumulator overflow detected
OV	OV = 1	Accumulator overflow detected
BIO	$\overline{\text{BIO}}$ is low	$\overline{\text{BIO}}$ signal is low
NTC	TC = 0	Test/control flag cleared
TC	TC = 1	Test/control flag set
UNC	none	Unconditional operation

You can combine conditions from four groups (Table 2–2). Up to four conditions can be selected; however, each of these conditions must be from different groups. You cannot have two conditions from the same group. For example, you can test EQ and TC at the same time but not NEQ and GEQ. For example:

```
BCND  BRANCH,LT,NOV,TC    ; If ACC < 0, no overflow
                          ; and TC bit set.
```

In this example, LT (ACC < 0), NOV (OV = 0), and TC (TC = 1) conditions must be met for the branch to be taken.

Table 2–2. Groups for Multiconditional Instructions

Group 1	Group 2	Group 3	Group 4
EQ	OV	C	TC
NEQ	NOV	NC	NTC
GT			BIO
LT			
GEQ			
LEQ			

Testing the status of the TC flag is mutually exclusive to testing the $\overline{\text{BIO}}$ pin. The code in Example 2–6 simultaneously tests the carry (C) flag and the sign bit of the accumulator to locate a zero bit (beginning from MSB) in a 64-bit word, consisting of ACC and ACCB with ACC having the higher part. This 64-bit word could be the serial port output where the first 0 indicates the start bit.

Example 2–6. Using Multiple Conditions With BCND Instruction

```
       LDP    #0
       SPLK   #63,BRCR            ;No. of iterations – 1
       .
       .                          ;Code to get 64–bit input word and
       .                          ;load it in ACC and ACCB
       .
       LAR    AR0,#0              ;Initialize the bit counter
       RPTB   ENDLOOP–1           ;For I=0,I<=63,I++
        SFLB                      ;Shift left ACC+ACCB, MSB is shifted
*                                 ;out in Carry flag
        MAR   *+                  ;Increment bit counter
        BCND  ENDLOOP,NC,LT       ;Exit if carry=0 and current MSB=1
ENDLOOP:                          ;ACC+ACCB contains aligned data now
       APL    #0FFFEh,PMST        ;Clear BRAF flag
```

2.4.3 Search Algorithm Using CRGT

Example 2–7 on page 2-15 shows how the CRGT and RPTB instructions find the maximum value and its location by searching through a block of data. Loop overhead is minimized by using the block-repeat function. The accumulator is initialized with the minimum possible value (8000h) before the main search loop is entered.

To find the minimum value, CRGT instruction may be replaced by CRLT, and the accumulator is loaded with the maximum possible value (7FFFh) instead of the smallest. The rest of the code remains the same.

2.4.4 Matrix Multiplication Using Nested Loops

The ’C5x provides three different types of instructions to implement code loops. The RPT (single-instruction repeat) instruction allows the following instruction to be executed N times. The RPTB (repeat block) instruction repeatedly executes a block of instructions with the loop count determined by the block repeat counter register (BRCR). The BANZ (branch if AR not 0) instruction is another way of implementing for-next loops with the count specified by an auxiliary register.

Three-level-deep nested loops can be efficiently implemented by these three instructions with each instruction controlling one loop. Example 2–8 on page 2-16 shows this nested code structure to do N-by-N matrix multiplication. Note the use of the BANZD (delayed BANZ) instruction to avoid flushing the instruction pipeline. Also, note the use of the MADS (multiply-accumulate using BMAR) instruction to dynamically switch between the rows of matrix A to compute the elements of the product matrix C.

Example 2–7. Using CRGT and CRLT Instructions

```
* This routine searches through a block of data in the data memory to store
* the maximum value and the address of that value in memory locations MAXVAL
* and MAXADR, respectively. The data block could be of any size defined by
* the Block Repeat Counter Register (BRCR).
*
* KEY 'C5X instructions:
*
* RPTB       Repeat a block of code as defined by repeat counter BRCR.
* CRGT       Compare ACC to ACCB. Store larger value in both ACC and ACCB,
*            set CARRY bit if value larger than previously larger value found.
* XC         Execute conditionally (1 or 2 words) if CARRY bit is set.
*
MAXADR       .set   60h
MAXVAL       .set   61h
             .mmregs
             .text
             LDP    #0            ;Point to data page 0
             LAR    AR0,#0300h    ;AR= data memory addr
             SETC   SXM           ;Set sign extension mode
             LACC   #08000h       ;Load minimum value
* Use #07FFFh (largest possible) to check for minimum value
             SACB                 ;Store into ACCB
             SPLK   #9,BRCR       ;Rpt cont = 9 for 10 data values
             RPTB   endb –1       ;Repeat block from here to endb–1
startb:
              LACC  *             ;Load data from <(AR0)> into ACC
              CRGT                ;Set carry if ACC > previous largest value
* Use CRLT to find minimum value
              SACL  MAXVAL        ;Save new largest which is in ACC & ACCB
              XC    #1,C          ;Save addr if current value > previous largest
              SAR   AR0,MAXADR
              MAR   *+
endb:        RET
* At the end of routine, following registers contain:
* ACC        = 32050
* ACCB       = 32050
* (MAXVAL)   = 32050
* (MAXADR)   = 0307h
             .data                ;Data is expected to be in data RAM
             .word  5000          ;Start address = 0300h
             .word  10000
             .word  320
             .word  3200
             .word  –5600
             .word  –2105
             .word  2100
             .word  32050
             .word  1000
             .word  –1
             .end
```

Example 2–8. Using Nested Loops

```
              .title ”NxN Matrix Multiply Routine”
              .mmregs
*;;;;;;;;;;;;;;;;;;;;;;;;;;;;;;;;;;;;;;;;;;;;;;;;;;;;;;;;;;;;;;;;;;;;;;;;;;;;;;;;
*
* This routine performs multiplication of two NxN matrices.
* A x B = C where A,B, and C are NxN in size.
* Entry Conditions:
*      AR1 –> element (0,0) of A (in program space)
*      AR2 –> element (0,0) of B (in data space)
*      AR3 –> element (0,0) of C (in data space)
*      DP  =  0,           NDX = 1
*      ARP =  2
* Storage of matrix elements in memory (beginning from low memory):
*      M(0,0),...,M(0,N–1),M(1,0),...,M(N–1,N–1)
*
*;;;;;;;;;;;;;;;;;;;;;;;;;;;;;;;;;;;;;;;;;;;;;;;;;;;;;;;;;;;;;;;;;;;;;;;;;;;;;;;;
              LDP    #0
              SPLK   #3Eh,PMST
              SPLK   #2000h,AR1
              SPLK   #0810h,AR2
              SPLK   #0820h,AR3
              MAR    *,AR2
MTRX_MPY:
              LAR    AR0,#(N–1)          ;Set up loop count
              SPLK   #N,INDX             ;Row size
              SAR    AR2,AR4             ;Save addr of B
*                                        ;For i=0,i<N,++i
LOOP1:        SMMR   AR1,BMAR            ;BMAR –> A(i,0)
              SPLK   #(N–1),BRCR         ;Setup loop2 count
              SAR    AR4,AR5             ;AR5 –> B(0,0)
LOOP2:        RPTB   ELOOP2              ;For j=0,j<N,++j
               SAR   AR5,AR2             ;AR2 –> B(0,j)
LOOP3:         RPTZ  #(N–1)              ;For k=0,k<N,++k
ELOOP3:         MADS *0+                 ;Acc=A(i,k)xB(k,j)
               APAC                      ;Final accumulation
               MAR   *,AR5               ;ARp = AR5
               MAR   *+,AR3              ;AR5 –> B(0,j+1)
ELOOP2:        SACL  *+,0,AR2            ;Save C(i,j)
              MAR    *,AR0               ;Loop back if
              BANZD  LOOP1,*–,AR1        ;Count != N
              ADRK   N                   ;AR1 –> A(i+1,0)
ELOOP1:       MAR    *,AR2               ;ARp = AR2
```

2.5 Circular Buffers

Circular addressing is an important feature of the ’C5x instruction set. Algorithms like convolution, correlation, and finite impulse response (FIR) filters can make use of circular buffers in memory. The ’C5x supports two concurrent buffers operating via the auxiliary registers. Five memory-mapped registers control the circular buffer operation: CBSR1, CBSR2, CBER1, CBER2, and CBCR.

The start and end addresses must be loaded in the corresponding buffer registers (CBSRx and CBERx) before the circular buffer is enabled. Also, the auxiliary register that acts as a pointer to the buffer must be initialized with the proper value.

Example 2–9 on page 2-18 shows the use of a circular buffer to generate a digital sine wave. A 256-word sine-wave table is loaded in the DARAM B1 block of internal data memory from external program memory. Accessing the internal DARAM requires only one machine cycle. The block move address register (BMAR) is loaded with the ROM address of the table. The block-move instruction moves 256 samples of the sine wave to internal data memory, which is then set up as a circular buffer.

The start and end addresses of this circular buffer are loaded into the corresponding registers (CBSR1 and CBER1). The auxiliary register AR7 is also initialized to the beginning of the sine-wave table. Note the use of the SAMM instruction to update AR7 because all auxiliary registers are memory-mapped at data page 0. Finally, circular buffer #1 is enabled and AR7 is mapped to that buffer. The other circular buffer is disabled.

Whenever the next sample is to be pulled off from the table, postincrement indirect addressing may be used with AR7 as the pointer. This ensures that the pointer wraps around to the beginning of the table if the previous sample was the last one on the table.

Example 2–9. Use of Circular Addressing

```
              .title ’Digital Sine–Wave Generator’
              .mmregs
*;;;;;;;;;;;;;;;;;;;;;;;;;;;;;;;;;;;;;;;;;;;;;;;;;;;;;;;;;;;;;;;;;;;;;;;;;;;;;;;;
*
* This routine illustrates the circular addressing capability of C5x devices.
* A digital sine–wave generator is implemented as circular buffer #1 with AR7
* as its pointer. XSINTBL is the location in external program memory where this
* table is stored. It is moved to internal data memory block B1 where it is
* setup as a circular buffer.
*
*;;;;;;;;;;;;;;;;;;;;;;;;;;;;;;;;;;;;;;;;;;;;;;;;;;;;;;;;;;;;;;;;;;;;;;;;;;;;;;;;
XSINTBL       .set   03000h              ;Program space address of sine table
              .text
SINTBL        LDP    #0
              LAR    AR0,#0300h          ;Address of B1 block
              MAR    *,AR0
              LACC   #XSINTBL            ;Get sine table address in
*                                        ;external program memory
              SAMM   BMAR                ;Load source register
*
              RPT    #255                ;Move 256–word
              BLPD   BMAR,*+             ;Load table from external program
*                                        ;memory to internal data memory
              SAMM   CBSR1               ;Start address of buffer=300h
              SAMM   AR7                 ;AR7 points to start of buffer
              ADD    #255
              SAMM   CBER1               ;End address of buffer=3FFh
              SPLK   #0Fh,CBCR           ;Enable CB#1, disable CB#2
              .                          ;pointer for CB#1 is AR7
              .
              .
NXTSMP        MAR    *,AR7
              LACC   *+                  ;Get next sample from table
              .                          ;AR7 is updated to next valid sample
              .
              .
DISBLE        APL    #0FFF7h,CBCR        ;Disable CB#1
              .
              .
              .
              RET
```

If the step size must be greater than 1, check to see if an update to the auxiliary register generates an address outside the range of the circular buffer. This may happen if the same sine table is used to generate sine waves of different frequencies by changing the step size. Modulo addressing can avoid such problems. A simple way to perform modulo addressing on ’C5x devices is to use the APL and OPL instructions. For example, to implement the modulo-256 counter, first load the dynamic bit manipulation register (DBMR) with 255 (the maximum value allowed); when the auxiliary register is updated (by any amount), it is ANDed with the DBMR and ORed with the start address of the buffer. The start address of the modulo-2^k buffer must have 0s in the *k* LSBs. Hence, for modulo-256 addressing, the first eight LSBs of the start register must be 0 (see Example 2–10).

Example 2–10. Modulo-256 Addressing

```
START  .set   04000h        ;Start address of the buffer
       LDP    #0
       LACL   #0FFh
       SAMM   DBMR          ;Max value = 255
        .
        .
        .
       MAR    *0+           ;Increment AR7 by some amount
       APL    AR7           ;Extract lower 8 bits
       OPL    #START,AR7    ;Add the start address
        .
        .
        .
```

2.6 Single-Instruction Repeat (RPT) Loops

The ’C5x provides two different types of repeat instructions. The repeat block (RPTB) instruction implements code loops that can be 3 to 65 536 words in size. These loops do not require any additional cycles to jump from the end-of-block to the start-of-block address at the end of each iteration. In addition, these zero-overhead loops are interruptible so that they can be used in background processing without affecting the latency of time-critical tasks.

On the other hand, the single-instruction repeat (RPT) pipelines the execution of the next instruction to provide a high-speed repeat mode. A 16-bit repeat counter register (RPTC) allows execution of a single instruction 65 536 times. When this repeat feature is used, the instruction being repeated is fetched only once. As a result, many multicycle instructions, such as MAC/MACD, BLDD/BLDP, or TBLR/TBLW, become single-cycle when repeated.

Some of ’C5x instructions behave differently in the single-instruction repeat mode to efficiently use the ’C5x multiple-bus architecture. The following instructions fall in this category:

BLDD, BLDP, BLPD, IN, OUT, MAC, MACD, MADS, MADD, TBLR, TBLW, LMMR, SMMR

Because the instruction is fetched and internally latched when in single-instruction repeat mode, the program bus is used by these instructions to read or write a second operand in parallel to the operations being done using the data bus. With the instruction latched for repeated execution, the program counter is loaded with the second operand address (which may be in data, program, or I/O space) and incremented on succeeding executions to read/write in successive memory locations. As an example, the MAC instruction fetches the multiplicand from the program memory via the program bus. Simultaneously with the program bus fetch, the second multiplicand is fetched from data memory via the data bus. In addition to these data fetches, preparation is made for accesses in the following cycle by incrementing the program counter and by indexing the auxiliary register. The IN instruction is another example of an instruction that benefits from simultaneous transfers of data on both the program and data buses. In this case, data values from successive locations in I/O space may be read and transferred to data memory. For complete details of how the above-listed instructions behave in repeat mode, see the individual description of each instruction in the *TMS320C5x User’s Guide*.

Example 2–11 through Example 2–17 demonstrate the implementation of memory-to-memory block moves on the ’C5x using single-instruction repeat (RPT) loops. There is no single instruction to move data from memory to memory.

Example 2–11. Memory-to-Memory Block Moves Using RPT with BLDD

```
*
* This routine uses the BLDD instruction to move external data memory to
* internal data memory.
*
MOVEDD:
       LACC   #4000h
       SAMM   BMAR          ;BMAR –> source in data memory.
       LAR    AR7,#100h     ;AR7 –> destination in data memory
       MAR    *,AR7         ;LARP = AR7.
       RPT    #1023         ;Move 1024 value to blocks B0 and B1
        BLDD  BMAR,*+
       RET
```

Example 2–12. Memory-to-Memory Block Moves Using RPT with BLDP

```
*
* This routine uses the BLDP instruction to move external data memory to
* internal program memory. This instruction could be used to boot load a
* program to the 8K on–chip program memory from external data memory.
*
MOVEDP:
       LACC   #800h
       SAMM   BMAR          ;BMAR –> destination in program memory ('C50)
       LAR    AR7,#0E000h   ;AR7 –> source in data memory.
       RPT    #8191         ;Move 8K to program memory space.
        BLDP  *+
       RET
```

Example 2–13. Memory-to-Memory Block Moves Using RPT with BLPD

```
*
* This routine uses the BLPD instruction to move external program memory to
* internal data memory. This routine is useful for loading a coefficient
* table stored in external program memory to data memory when no external
* data memory is available.
*
MOVEPD:
       LAR    AR7,#100h     ;AR7 –> destination in data memory.
       RPT    #127          ;Move 128 values from external program
        BLPD  #3800h,*+     ;to internal data memory B0.
       RET
```

Example 2–14. Memory-to-Memory Block Moves Using RPT with TBLR

```
*
* This routine uses the TBLR instruction to move external program memory to
* internal data memory. This differs from the BLPD instruction in that the
* accumulator contains the source program memory address from which to
* transfer. This allows for a calculated, rather than predetermined, location
* in program memory to be specified. The calling routine must contain the
* source program memory address in the accumulator.
*

TABLER:
       MAR    *,AR3         ;AR3 –> destination in data memory.
       LAR    AR3,#300h
       RPT    #127          ;Move 128 items to data memory block B1
        TBLR  *+
       RET
```

Example 2–15. Memory-to-Memory Block Moves Using RPT with TBLW

```
*
* This routine uses the TBLW instruction to move data memory to program memory.
* This differs from the BLDP instruction in that the accumulator contains the
* destination program memory address to which to transfer. This allows for a
* calculated, rather than predetermined, location in program memory to be
* specified. The calling routine must contain the destination program memory
* address in the accumulator.
*
TABLEW:
       MAR    *,AR4         ;ARP = AR4.
       LAR    AR4,#380h     ;AR4 –> source address in data memory.
       RPT    #127          ;Move 128 items from data memory to
        TBLW  *+            ;program memory.
       RET
```

Example 2–16. Memory-to-Memory Block Moves Using RPT with SMMR

```
*
* This routine uses the SMMR instruction to move data from a memory–mapped
* I/O port to local data memory. Note that 16 I/O ports are mapped in data
* page 0 of the ’C5x memory map.
*
INPUT:
       LDP    #0
       RPT    #511          ;Input 512 values from port 51h to table beginning
        SMMR  51h,800h      ;at 800h in data memory.
       RET
```

Example 2–17. Memory-to-Memory Block Moves Using RPT with LMMR

```
*
* This routine uses the LMMR instruction to move data from local data memory
* to a memory–mapped I/O port. Note that 16 I/O ports are mapped in data
* page 0 of the ’C5x memory map.
*
OUTPUT:
       LDP    #0            ;data page 0
       RPT    #63           ;Output 64 values from a table beginning at 800h
        LMMR  50h,800h      ;in data memory to port 50h.
       RET
```

2.7 Subroutines

Example 2–18 shows the use of a subroutine to determine the square root of a 16-bit number. The main routine executes to the point where the square root of a number is needed. At this point, a delayed call (CALLD) is made to the subroutine, transferring control to that section of the program memory for execution and then returning to the calling routine via the delayed return (RETD) instruction when execution has completed.

Example 2–18 shows several features of the ’C5x instruction set. In particular, note the use of the delayed call (CALLD), delayed return (RETD), and conditional execute (XC) instructions. Due to the four-level-deep pipeline on ’C5x devices, normal branch instructions require four cycles to execute. Using delayed branches, only two cycles are required for execution. The XC instruction is useful where only one or two instructions are to be executed conditionally. In this example, notice how XC is used to avoid an extra cycle due to the branch instruction. Use of the XC instruction also helps in keeping the execution time of a routine constant, regardless of input conditions. This is because XC executes NOPs in place of instructions if conditions are not met.

Note that the restore is done with the LST instruction to prevent the ARP from being overwritten. If indirect addressing is used, the order is reversed.

Example 2–18. Square Root Computation Using XC Instruction

```
* Autocorrelation
* This routine performs a correlation of two vectors and then calls a Square
* Root subroutine that will determine the RMS amplitude of the waveform.
*
AUTOC
       .
       .
       .
       CALLD  SQRT                ;Call square root subroutine after
        SST   #0,ST0              ;executing next two instructions
        SST   #1,ST1              ;Get the value to be passed to SQRT subroutine
       .
       .
       .
*
* Square Root Computation
*
* This routine computes the square root of a number that is located
* in the higher half of accumulator. The number is in Q15 format.
*
BRCR   .set   09h                 ;DP=0
ST0    .set   60h                 ;Internal RAM block B2
ST1    .set   61h
```

Example 2–18. Square Root Computation Using XC Instruction (Continued)

```
NUMBER .set   62h
TEMPR  .set   63h
GUESS  .set   64h
       .text
SQRT   MAR    *,AR0
       LACC   *
       LDP    #0
       SETC   SXM                 ;Set SXM=1
       SPM    1                   ;Set PM mode for fractional arithmetic
       SACL   NUMBER              ;Save the number
       LACL   #0
       SACB                       ;Clear accumulator buffer
       SPLK   #11,BRCR            ;Initialize for 12 iterations
       SPLK   #800h,GUESS         ;Set initial guess
       LACC   NUMBER
       SUB    #200h
       BCNDD  LOOP,LT             ;If NUMBER<200h then begin looping
        SPLK  #800h,TEMPR
       LACC   #4000h              ;Otherwise set initial guess
       SACL   GUESS               ;and temporary root to 4000h
       SACL   TEMPR
       SPLK   #14,BRCR            ;and increase iterations to 15
LOOP   RPTB   ENDLP–1             ;Repeat block
        SQRA  TEMPR               ;Square temporary root
        LACC  NUMBER,16
        SPAC                      ;Acc=NUMBER–TEMPR**2
        NOP                       ;Dead cycle for XC
        XC    2,GT                ;If NUMBER>TEMPR**2 skip next 2 instr.
        LACC  TEMPR,16
        SACB                      ;Otherwise ROOT <– TEMPR
        LACC  GUESS,15
        SACH  GUESS               ;GUESS <– GUESS/2
        ADDB
        SACH  TEMPR               ;TEMPR <– GUESS+ROOT
ENDLP  LACB                       ;High Acc contains square root of NUMBER
       RETD
        LST   #1,ST1
        LST   #0,ST0              ;Restore context
```

2.8 Extended-Precision Arithmetic

Numerical analysis, floating-point computations, or other operations may require arithmetic to be executed with more than 32 bits of precision. Since the ’C5x devices are 16/32-bit fixed-point processors, software is required for the extended precision of arithmetic operations. Subroutines that perform the extended-precision arithmetic functions for the ’C5x are provided in the examples of this section. The technique consists of performing the arithmetic by parts, similar to the way in which longhand arithmetic is done.

The ’C5x has several features that help make extended-precision calculations more efficient. One of the features is the carry bit. The carry bit is affected by all arithmetic operations of the accumulator, including addition and subtraction with the accumulator buffer. This allows 32-bit-long arithmetic operations using the accumulator buffer as the second operand.

The carry bit is also affected by the rotate and shift accumulator instructions. It may also be explicitly modified by the load status register ST1 and the set/reset control bit instructions. For proper operation, the overflow mode bit should be reset (OVM = 0) so that the accumulator result is not loaded with the saturation value.

2.8.1 Addition

The carry bit is set (C = 1) whenever the input scaling shifter, the product register (PREG), or the accumulator buffer value added to the accumulator contents generates a carry out from bit 31. Otherwise, the carry bit is reset (C = 0) because the carry out from bit 31 is a 0. One exception to this case is the addition to the accumulator with a shift of 16 instruction (ADD *dma*,16), which can only set the carry bit. This allows the ALU to generate a proper single carry when the addition either to the lower or the upper half of the accumulator actually causes the carry. Figure 2–1 demonstrates the significance of the carry bit for additions.

Example 2–19 on page 2-28 shows an implementation of two 64-bit numbers added to each other to obtain a 64-bit result.

Figure 2–1. 32-Bit Addition

```
C  MSB           LSB
X   F F F F F F F F (ACC)
   +             1
 1   0 0 0 0 0 0 0 0
```

```
C  MSB           LSB
X   F F F F F F F F (ACC)
   +F F F F F F F F
 1   F F F F F F F E
```

```
C  MSB           LSB
X   7 F F F F F F F (ACC)
   +             1
 0   8 0 0 0 0 0 0 0
```

```
C  MSB           LSB
X   7 F F F F F F F (ACC)
   +F F F F F F F F
 1   7 F F F F F F E
```

```
C  MSB           LSB
X   8 0 0 0 0 0 0 0 (ACC)
   +             1
 0   8 0 0 0 0 0 0 1
```

```
C  MSB           LSB
1   8 0 0 0 0 0 0 0 (ACC)
   +F F F F F F F F
 1   7 F F F F F F F
```

```
C  MSB           LSB
1   0 0 0 0 0 0 0 0 (ACC)
  +               0 (ADDC)
 0   0 0 0 0 0 0 0 1
```

```
C  MSB           LSB
1   F F F F F F F F (ACC)
   +               0 (ADDC)
 1   0 0 0 0 0 0 0 0
```

```
C  MSB           LSB
1   8 0 0 0 F F F F (ACC)
   +0 0 0 1 0 0 0 0 (ADD dma,16)
 1   8 0 0 0 F F F F
```

```
C  MSB           LSB
1   8 0 0 0 F F F F (ACC)
   +7 F F F 0 0 0 0 (ADD dma,16)
 1   F F F F F F F F
```

Example 2–19. 64-Bit Addition

```
*
* Two 64–bit numbers are added to each other producing a 64–bit result.
* The number X (X3, X2, X1, X0) and Y (Y3, Y2, Y1, Y0) are added resulting in
* W (W3, W2, W1, W0). If the result is required in 64–bit ACC/ACCB pair,
* replace the instructions as indicated in the comments below.
*
*      X3 X2 X1 X0
* +    Y3 Y2 Y1 Y0
*      -----------
*      W3 W2 W1 W0 –OR– ACC ACCB*
ADD64  LACC   X1,16         ;ACC = X1 00
       ADDS   X0            ;ACC = X1 X0
       ADDS   Y0            ;ACC = X1 X0 + 00 Y0
       ADD    Y1,16         ;ACC = X1 X0 + Y1 Y0
       SACL   W0            ;THESE 2 INSTR ARE REPLACED BY
       SACH   W1            ;”SACB” IF RESULT IS DESIRED IN (ACC ACCB)
       LACC   X3,16         ;ACC = X3 00
       ADDC   X2            ;ACC = X3 X2 + C
       ADDS   Y2            ;ACC = X3 X2 + 00 Y2 + C
       ADD    Y3,16         ;ACC = X3 X2 + Y3 Y2 + C
       SACL   W2            ;THESE 2 INSTR ARE NOT REQUIRED IF
       SACH   W3            ;THE RESULT IS DESIRED IN (ACC ACCB)
       RET
```

2.8.2 Subtraction

The carry bit is reset (C = 0) whenever the input scaling shifter, the PREG, or the accumulator buffer value subtracted from the accumulator contents generates a borrow into bit 31. Otherwise, the carry bit is set (C = 1) because no borrow into bit 31 is required. One exception to this case is the SUB *dma*,16 instruction, which can only reset the carry bit. This allows the ALU to generate a proper single carry when the subtraction either from the lower or the upper half of the accumulator actually causes the borrow. Figure 2–2 demonstrates the significance of the carry bit for subtraction.

Example 2–20 on page 2-30 shows an implementation of two 64-bit numbers subtracted from each other. A borrow is generated within the accumulator for each of the 16-bit parts of the subtraction operation.

Figure 2–2. 32-Bit Subtraction

```
C  MSB           LSB
X   0 0 0 0 0 0 0 0 (ACC)
   -              1
0   F F F F F F F F
```

```
C  MSB           LSB
X   0 0 0 0 0 0 0 0 (ACC)
   -F F F F F F F F
0   0 0 0 0 0 0 0 1
```

```
C  MSB           LSB
X   7 F F F F F F F (ACC)
   -              1
1   7 F F F F F F E
```

```
C  MSB           LSB
X   7 F F F F F F F (ACC)
   -F F F F F F F F
C   8 0 0 0 0 0 0 0
```

```
C  MSB           LSB
X   8 0 0 0 0 0 0 0 (ACC)
   -              1
1   7 F F F F F F F
```

```
C  MSB           LSB
X   8 0 0 0 0 0 0 0 (ACC)
   -F F F F F F F F
0   8 0 0 0 0 0 0 1
```

```
C  MSB           LSB
0   0 0 0 0 0 0 0 0 (ACC)
   -              0 (SUBB)
0   F F F F F F F F
```

```
C  MSB           LSB
0   F F F F F F F F (ACC)
   -              0 (SUBB)
1   F F F F F F F E
```

```
C  MSB           LSB
0   8 0 0 0 F F F F (ACC)
   -0 0 0 1 0 0 0 0 (SUB dma,16)
0   7 F F F F F F F
```

```
C  MSB           LSB
0   8 0 0 0 F F F F (ACC)
   -F F F F 0 0 0 0 (SUB dma,16)
0   8 0 0 1 F F F F
```

Example 2–20. 64-Bit Subtraction

```
*
* Two 64–bit numbers are subtracted, producing a 64–bit result.
* The number Y (Y3, Y2, Y1, Y0) is subtracted from X (X3, X2, X1, X0) resulting
* in W (W3, W2, W1, W0). If the result is required in 64–bit ACC/ACCB pair,
* replace the instructions as indicated in the comments below.
*
*      X3 X2 X1 X0
* –    Y3 Y2 Y1 Y0
*      -----------
*      W3 W2 W1 W0 –OR– ACC ACCB
*
SUB64  LACC   X1,16        ; ACC = X1 00
       ADDS   X0           ; ACC = X1 X0
       SUBS   Y0           ; ACC = X1 X0 – 00 Y0
       SUB    Y1,16        ; ACC = X1 X0 – Y1 Y0
       SACL   W0           ; THESE 2 INSTR ARE REPLACED BY
       SACH   W1           ; ”SACB” IF RESULT IS DESIRED IN (ACC ACCB)
       LACL   X2           ; ACC = 00 X2
       SUBB   Y2           ; ACC = 00 X2 – 00 Y2 – C
       ADD    X3,16        ; ACC = X3 X2 – 00 Y2 – C
       SUB    Y3,16        ; ACC = X3 X2 – Y3 Y2 – C
       SACL   W2           ; THESE 2 INSTR ARE NOT REQUIRED IF
       SACH   W3           ; THE RESULT IS DESIRED IN (ACC ACCB)
       RET
```

2.8.3 Multiplication

Another important feature that aids in extended-precision calculations is the MPYU (unsigned multiply) instruction. The MPYU instruction allows two unsigned 16-bit numbers to be multiplied and the 32-bit result placed in the PREG in a single cycle. Efficiency is gained by generating partial products from the 16-bit portions of a 32-bit or larger value, instead of having to split the value into 15-bit or smaller parts.

Further efficiency is gained by using the accumulator buffer to hold partial results, instead of using a temporary location in data memory. The ability of the ’C5x devices to barrel shift the accumulator by 1 to 16 bits in only one cycle is also useful for scaling and justifying operands.

For 16-bit integer multiplication, in which one operand is a 2s-complement signed integer and the other is an unsigned integer, the algorithm shown in Figure 2–3 can be used.

Figure 2–3. 16-Bit Integer Multiplication Algorithm

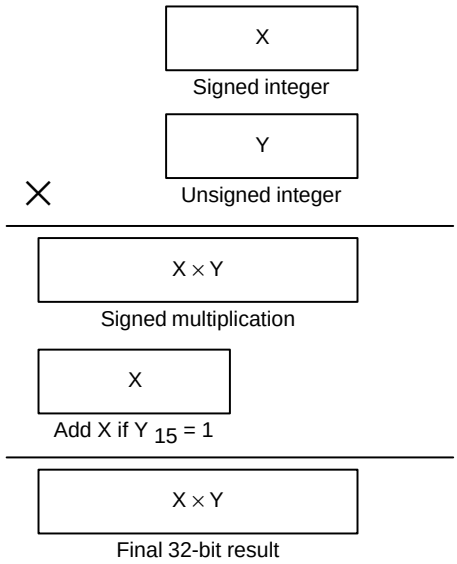

Steps required:

1) Multiply two operands X and Y as if they are signed integers.

2) If MSB of the unsigned integer Y is 1, add X to the upper half of the 32-bit signed product.

The correction factor must be added to the signed multiplication result because the bit weight of the MSB of any 16-bit unsigned integer is 2^{15}.

Consider the following representation of a signed integer X and an unsigned integer Y:

$$X = -2^{15}x_{15} + 2^{14}x_{14} + 2^{13}x_{13} + ... + 2^{1}x_{1} + 2^{0}x_{0}$$

$$Y = 2^{15}y_{15} + 2^{14}y_{14} + 2^{13}y_{13} + ... + 2^{1}y_{1} + 2^{0}y_{0}$$

Multiplication of X and Y yields:

$$X \times Y = X \times (2^{15}y_{15} + 2^{14}y_{14} + 2^{13}y_{13} + ... + 2^{1}y_{1} + 2^{0}y_{0})$$

$$= 2^{15}y_{15}X + 2^{14}y_{14}X + 2^{13}y_{13}X + ... + 2^{1}y_{1}X + 2^{0}y_{0}X \qquad (1)$$

However, if X and Y are considered signed integers, their multiplication yields:

$$X \times Y = X \times (-2^{15}y_{15} + 2^{14}y_{14} + 2^{13}y_{13} + ... + 2^{1}y_{1} + 2^{0}y_{0})$$

$$= -2^{15}y_{15}X + 2^{14}y_{14}X + 2^{13}y_{13}X + ... + 2^{1}y_{1}X + 2^{0}y_{0}X \qquad (2)$$

The difference between equations (1) and (2) is in the first term on the right-hand side of the two equations.

Hence, if we add the correction term, $2^{16}y_{15}X$, to equation (2), the result would be identical to that of equation (1) and is the correct result.

This method of multiplying a signed integer with an unsigned integer can be used to implement extended-precision multiplication on the ’C5x. Figure 2–4 shows a 32-bit multiplication algorithm based on this method. Example 2–21 on page 2-33 implements this algorithm. The product is a 64-bit integer number. Note the use of BSAR and XC instructions.

Example 2–22 on page 2-34 performs fractional multiplication. The operands are in Q31 format, while the product is in Q30 format.

Figure 2–4. 32-Bit Multiplication Algorithm

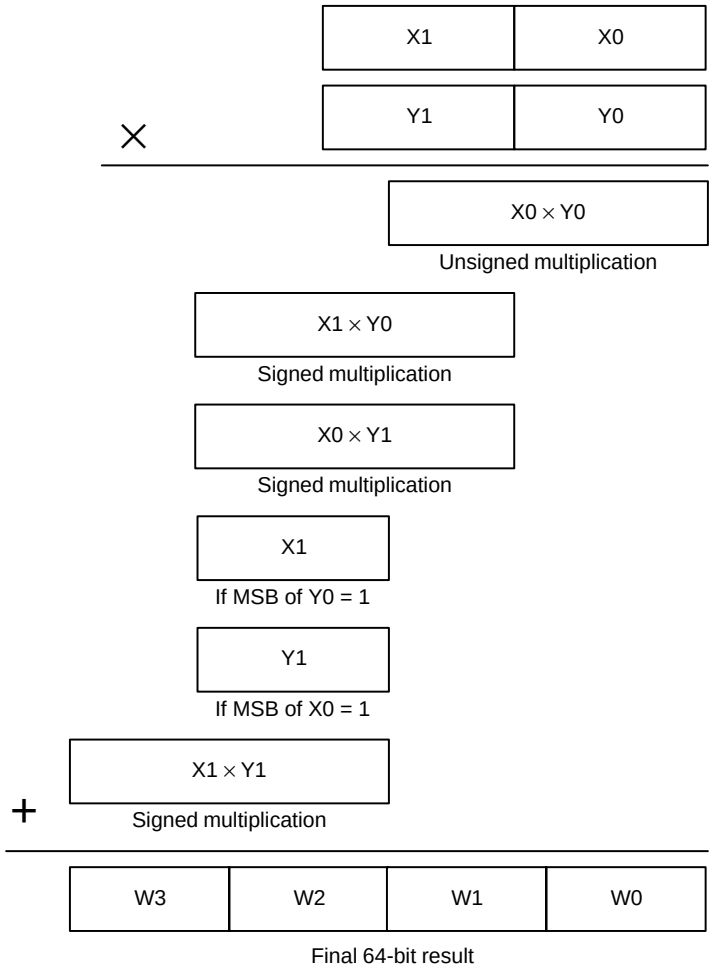

Example 2–21. 32-Bit Integer Multiplication

```
       .title ”32–bit Optimized Integer Multiplication”
       .def   MPY32
*;;;;;;;;;;;;;;;;;;;;;;;;;;;;;;;;;;;;;;;;;;;;;;;;;;;;;;;;;;;;;;;;;;;;;;;;;;;;;;;;;;;;;;;;;;;;;;;;
*
* This routine multiplies two 32–bit signed integers resulting in a 64–bit
* product. The operands are fetched from data memory and the result is
* written back to data memory.
* Data Storage:
*      X1,X0               32–bit operand
*      Y1,Y0               32–bit operand
*      W3,W2,W1,W0   64–bit product
*
* Entry Conditions:
*      DP  = 6, SXM = 1
*      OVM = 0
*
*;;;;;;;;;;;;;;;;;;;;;;;;;;;;;;;;;;;;;;;;;;;;;;;;;;;;;;;;;;;;;;;;;;;;;;;;;;;;;;;;;;;;;;;;;;;;;;;;
X1     .set   300h          ;DP=6
X0     .set   301h          ;DP=6
Y1     .set   302h          ;DP=6
Y0     .set   303h          ;DP=6
W3     .set   304h          ;DP=6
W2     .set   305h          ;DP=6
W1     .set   306h          ;DP=6
W0     .set   307h          ;DP=6
       .text
MPY32:
       BIT    X0,0          ;TC = X0 bit#15
       LT     X0            ;T = X0
       MPYU   Y0            ;P = X0Y0
       SPL    W0            ;Save W0
       SPH    W1            ;Save partial W1
       MPY    Y1            ;P = X0Y1
       LTP    X1            ;ACC = X0Y1, T = X1
       MPY    Y0            ;P = X1Y0
       MPYA   Y1            ;ACC = X0Y1+X1Y0, P=X1Y1
       ADDS   W1            ;ACC = X0Y1+X1Y0+X0Y02^–16
       SACL   W1            ;Save final W1
       BSAR   16            ;Shift ACC right by 16
       XC     1,TC          ;If MSB of X0 is 1
        ADD   Y1            ;Add Y1
       BIT    Y0,0          ;TC = Y0 bit#15
       APAC                 ;ACC = X1Y1 + (X0Y1+X1Y0)2^–16
       XC     1,TC          ;If MSB of Y0 is 1
        ADD   X1            ;Add X1
       SACL   W2            ;Save W2
       SACH   W3            ;Save W3
```

Example 2–22. 32-Bit Fractional Multiplication

```
       .title ”32–bit Fractional Multiplication”
*;;;;;;;;;;;;;;;;;;;;;;;;;;;;;;;;;;;;;;;;;;;;;;;;;;;;;;;;;;;;;;;;;;;;;;;;;;;;;;;;
*
* This routine multiplies two Q31 signed integers resulting in a Q30 product.
* The operands are fetched from data memory and the result is written back
* to data memory.
* Data Storage:
*      X1,X0               Q31 operand
*      Y1,Y0               Q31 operand
*      W1,W0               Q30 product
* Entry Conditions:
*      DP  = 6, SXM = 1
*      OVM = 0
*
*;;;;;;;;;;;;;;;;;;;;;;;;;;;;;;;;;;;;;;;;;;;;;;;;;;;;;;;;;;;;;;;;;;;;;;;;;;;;;;;;
X1     .set   300h          ;DP=6
X0     .set   301h          ;DP=6
Y1     .set   302h          ;DP=6
Y0     .set   303h          ;DP=6
W1     .set   304h          ;DP=6
W0     .set   305h          ;DP=6
       .text
       BIT    X0,0          ;TC = X0 bit#15
       LT     X0            ;TREG0 = X0
       MPY    Y1            ;P = X0*Y0
       LTP    X1            ;ACC = X0*Y0
       MPY    Y0            ;P = X1*Y0
       MPYA   Y1            ;ACC = X0*Y0 + X1*Y0
       BSAR   16            ;Throw away low 16 bits
       XC     1,TC          ;If MSB of X0 is 1
        ADD   Y1            ;then add Y1
       BIT    Y0,0          ;TC = Y0 bit#15
       APAC                 ;ACC = ACC + X1*Y1
       XC     1,TC          ;If MSB of Y0 is 1
        ADD   X1            ;then add X1
       SACL   W0            ;Save lower product
       SACH   W1            ;Save upper product
```

2.8.4 Division

Integer and fractional division is implemented on the ’C5x by repeated subtractions executed with SUBC, a special conditional subtract instruction. Given a 16-bit positive dividend and divisor, the repetition of the SUBC command 16 times produces a 16-bit quotient in the low accumulator and a 16-bit remainder in the high accumulator.

SUBC implements binary division in the same manner as long division is done (Figure 2–5). The dividend is shifted until subtracting the divisor no longer produces a negative result. For each subtract that does not produce a negative answer, a 1 is put in the LSB of the quotient and then shifted. The shifting of the remainder and quotient after each subtract produces the separation of the quotient and remainder in the low and high halves of the accumulator, respectively.

Both the dividend and the divisor must be positive when using the SUBC command. Thus, the sign of the quotient must be determined and the quotient computed by using the absolute value of the dividend and divisor.

Integer division can be implemented with the SUBC instruction, as shown in Example 2–23 on page 2-37. For integer division, the absolute value of the numerator must be greater than the absolute value of the denominator.

Fractional division can also be implemented with the SUBC instruction as shown in Example 2–24 on page 2-38. When implementing a division algorithm, it is important to know if the quotient can be represented as a fraction and the degree of accuracy to which the quotient is to be computed. For fractional division, the absolute value of the numerator must be less than the absolute value of the denominator. Note that the dividend is loaded into the high accumulator and that only N–1 iterations are required for an N-bit fraction.

Figure 2–5. 16-Bit Integer Division

LONG DIVISION:

```
                          000 0000 0000 0110   QUOTIENT
0000 0000 0000 0101 ) 000 0000 0010 0001
                        –1 01
                           110
                         –101
                           11   REMAINDER
```

SUBC METHOD:

32 HIGH ACC 16	15 LOW ACC 0	COMMENT
0000 0000 0000 0000	0000 0000 0010 0001	(1) Dividend is loaded into ACC. The divisor is left-shifted 15 and subtracted from ACC. The result is negative, so discard the result, shift ACC left one bit, and replace LSB with 0.
–10	1000 0000 0000 0000	
–10	0111 1111 1101 1111	
0000 0000 0000 0000	0000 0000 0100 0010	(2) Second SUBC command. The result is negative, so discard the result, shift ACC (dividend) left one bit, and replace LSB with 0.
–10	1000 0000 0000 0000	
–10	0111 1111 1011 1110	
⋮	⋮	⋮
0000 0000 0000 0100	0010 0000 0000 0000	(14) 14th SUBC command. The result is positive. Shift result left one bit and replace LSB with 1.
–10	1000 0000 0000 0000	
0000 0000 0000 0001	1010 0000 0000 0000	
0000 0000 0000 0011	0100 0000 0000 0001	(15) 15th SUBC command. The result is again positive. Shift result left one bit and replace LSB with 1.
–10	1000 0000 0000 0000	
0000 0000 0000 0000	1100 0000 0000 0001	
0000 0000 0000 0001	1000 0000 0000 0011	(16) 16th SUBC command. The result is negative, so discard the result, shift ACC left one bit, and replace LSB with 0.
–10	1000 0000 0000 0000	
	–1111 1111 1111 1101	
0000 0000 0000 0011	0000 0000 0000 0110	Answer reached after 16 SUBC commands stored in ACC.
REMAINDER	QUOTIENT	

Example 2–23. 16-Bit Integer Division Using SUBC Instruction

```
*
* This routine implements integer division with the SUBC instruction. For this
* integer division routine, the absolute value of the numerator must be greater
* than the absolute value of the denominator. In addition, the calling routine
* must check to verify that the divisor does not equal 0.
*
* The 16–bit dividend is placed in the low accumulator, and the high accumulator
* is zeroed. The divisor is in data memory. At the completion of the last SUBC,
* the quotient of the division is in the lower–order 16–bits of the accumulator.
* The remainder is in the higher–order 16–bits.
*
* Key C5x Instruction:
* RETCD return if conditions true – after executing next 2–word instruction or
*       two single–word instructions
*
DENOM         .set   60h
NUMERA        .set   61h
QUOT          .set   62h
REM           .set   63h
TEMSGN        .set   64h
*
INTDIV        LDP    #0
              LT     NUMERA        ;Determine sign of quotient.
              MPY    DENOM
*
              SPH    TEMSGN        ;Save the sign
              LACL   DENOM
              ABS                  ;Make denominator and numerator positive.
              SACL   DENOM         ;Save absolute value of denominator
              LACL   NUMERA
              ABS
*
* If divisor and dividend are aligned, division can start here.
*
              RPT    #15           ;16 cycle division. Low accumulator contains
               SUBC  DENOM         ;the quotient and high accumulator contains
*                                  ;the remainder at the end of the loop.
              BIT    TEMSGN,0      ;Test sign of quotient.
              RETCD  NTC           ;Return if sign positive, else continue.
               SACL  QUOT          ;Store quotient and remainder during delayed
               SACH  REM           ;return.
*
              LACL   #0            ;If sign negative, negate quotient and return
              RETD
               SUB   QUOT
               SACL  QUOT
```

Example 2–24. 16-Bit Fractional Division Using SUBC Instruction

```
*
* This routine implements fractional division with the SUBC instruction. For
* this division routine, the absolute value of the denominator must be
* greater than the absolute value of the numerator. In addition, the
* calling routine must check to verify that the divisor does not equal 0.
*
* The 16–bit dividend is placed in the high accumulator, and the low accumulator
* is zeroed. The divisor is in data memory.
*
DENOM         .set   60h
NUMERA        .set   61h
QUOT          .set   62h
REM           .set   63h
TEMSGN        .set   64h
*
FRACDIV       LDP    #0
              LT     NUMERA        ;Determine sign of quotient.
*
              MPY    DENOM
              SPH    TEMSGN
              LACL   DENOM
              ABS                  ;Make denominator and numerator positive.
              SACL   DENOM
              LACC   NUMERA,16     ;Load high accumulator, zero low accumulator.
              ABS
*
* If divisor and dividend are aligned, division can start here.
*
              RPT    #14           ;15-cycle division. Low accumulator contains
               SUBC  DENOM         ;the quotient and high accumulator contains the
                                   ;remainder at the end of the loop.
*
              BIT    TEMSGN,0      ;Test sign of quotient.
              RETCD  NTC           ;Return if sign positive, else continue.
               SACL  QUOT          ;Store quotient and remainder during delayed
               SACH  REM           ;return.*
              LACL   #0            ;If sign negative, negate quotient and return
              RETD
               SUB   QUOT
               SACL  QUOT
```

2.9 Floating-Point Arithmetic

To implement floating-point arithmetic on the ’C5x, operands must be converted to fixed point for arithmetic operations and then converted back to floating point. Conversion to floating-point notation is performed by normalizing the input data.

To multiply two floating-point numbers, the mantissas are multiplied and the exponents added. The resulting mantissa must be renormalized. Floating-point addition or subtraction requires shifting the mantissa so that the exponents of the two operands match. The difference between the exponents is used to left shift the lower power operand before adding. Then, the output of the add must be renormalized.

The ’C5x instructions used in floating-point operations are NORM, SATL, SATH, and XC. NORM may be used to convert fixed-point numbers to floating-point numbers. SATL in combination with SATH provides a 2-cycle 0 through 31-bit right shift. XC helps avoid extra cycles caused by branch instructions.

Example 2–25 on page 2-40 and Example 2–26 on page 2-44 show how to implement floating-point arithmetic on the ’C5x. Floating-point numbers are generally represented by mantissa and exponent values. Single-precision IEEE floating-point numbers are represented by a 24-bit mantissa, an 8-bit exponent, and a sign bit. In order to simplify the routines, a format slightly different from the IEEE format is used. Four words are occupied by each floating-point number. One sign word, one word for the exponent, and two words for the mantissa are reserved in memory as shown in the examples.

Example 2–25. Floating-Point Addition Using SATL and SATH Instructions

```
             .title ’Floating Point Addition Algorithm’
             .def   FL_ADD
*;;;;;;;;;;;;;;;;;;;;;;;;;;;;;;;;;;;;;;;;;;;;;;;;;;;;;;;;;;;;;;;;;;;;;;;;;;;;;;;;
*
*      THIS SUBROUTINE ADDS TWO FLOATING–POINT NUMBERS PRODUCING A NORMALIZED
*      FLOATING–POINT PRODUCT. THE FORMAT OF FLOATING–POINT NUMBERS IS
*      SPECIFIED BELOW.
*
*      INPUT / OUTPUT FORMAT
*      =====================
*      ----------------
*      |  ALL 0 OR 1  |    SIGN WORD
*      ----------------
*
*      ----------------
*      |   16 BITS    |    EXPONENT
*      ----------------
*
*      ----------------
*      |0|   15 BITS  |    HIGH PART OF MANTISSA
*      ----------------
*
*      ----------------
*      |    16 BITS   |    LOW PART OF MANTISSA
*      ----------------
*
*      Key C5x Instructions:
*
*      SAMM   save the accumulator contents in a memory–mapped register
*      LACB   accumulator is loaded with contents of accumulator buffer
*      SACB   contents of accumulator are copied in accumulator buffer
*      SATL   accumulator is barrel–shifted right by the value specified
*             in the 4 LSBs of TREG1
*      SATH   accumulator is barrel–shifted right by 16 bits if bit 4 of
*             TREG1 is a one.
*      SPLK   store immediate long constant in data memory
*      CPL    compare long immediate value (or DBMR) with data memory
*             TC=1 if two values are same
*             TC=0 otherwise
*
*;;;;;;;;;;;;;;;;;;;;;;;;;;;;;;;;;;;;;;;;;;;;;;;;;;;;;;;;;;;;;;;;;;;;;;;;;;;;;;;;
TREG1        .set   0dh
ASIGN        .set   60h          ;Sign, exponent, high and low part of mantissa
AEXP         .set   61h          ;of input number A
AHI          .set   62h
ALO          .set   63h
BSIGN        .set   64h          ;Sign, exponent, high and low part of mantissa
BEXP         .set   65h          ;of input number B
BHI          .set   66h
BLO          .set   67h
```

Example 2–25. Floating-Point Addition Using SATL and SATH Instructions (Continued)

```
CSIGN        .set   68h           ;Sign, exponent, high and low part of mantissa
CEXP         .set   69h           ;of the resulting floating point number C
CHI          .set   6Ah
CLO          .set   6Bh
DIFFEXP      .set   6Ch
             .text
FL_ADD       LDP    #0            ;Initialization
             SETC   SXM           ;Set sign extension mode
             MAR    *,AR0         ;ARP <– AR0
             LAR    AR0,#0        ;AR0 is used by NORM instruction
CMPEXP       LACL   BLO           ;Load low Acc with BLO
             ADD    BHI,16        ;Add BHI to high Acc
             SACB                 ;AccB = BHIBLO
             LACC   AEXP
             SUB    BEXP          ;Acc = AEXP=BEXP
             SACL   DIFFEXP       ;Save the difference
             BCND   AEQB,EQ       ;If |A| == |B|
             BCND   ALTB,LT       ;If |A| < |B|
AGTB         LACC   DIFFEXP       ;If |A| > |B|
             SAMM   TREG1         ;Load TREG1 with # of right shifts reqd.
             SUB    #32
             BCND   AGRT32,GEQ    ;If difference > 32
             LACB                 ;Acc = BHIBLO
             SATL
             SATH                 ;Right justify BHIBLO
             SACB                 ;Store the result back in AccB
AEQB         LACC   ASIGN         ;Copy sign and exponent values of
             SACL   CSIGN         ;A in C (i.e. the result)
             LACC   AEXP
             SACL   CEXP
CHKSGN       LACC   ASIGN         ;Acc=ASIGN–BSIGN
             SUB    BSIGN
             CLRC   TC            ;Clear TC flag
             XC     1,LT          ;If A<0 and B>0
              SETC  TC            ;Set TC flag
             BCNDD  ADNOW,EQ      ;If both A and B have same sign
             LACL   ALO
             ADD    AHI,16        ;Acc = AHIALO
             SBB                  ;Acc=A–B
             XC     1,TC          ;If A<0 and B>0
              NEG                 ;then Acc=B–A
             BCND   CZERO,EQ      ;If A–B == 0
             XC     2,LT          ;If A–B < 0
              SPLK  #0FFFFh,CSIGN ;then CSIGN=–1
             XC     2,GT          ;If A–B > 0
              SPLK  #0,CSIGN      ;then CSIGN=0
             XC     1,LT          ;If A–B<0
              ABS                 ;then Acc=|A–B|
             BD     NORMAL        ;delayed branch
              SACH  CHI           ;Save the result
              SACL  CLO
```

Example 2–25. Floating-Point Addition Using SATL and SATH Instructions (Continued)

```
CZERO        LACL   #0            ;If A–B == 0
             SACL   CEXP          ;then result is zero
             SACL   CSIGN         ;Make sign positive
             RETD                 ;Return delayed
             SACL   CHI
             SACL   CLO           ;Clear CHICLO
ADNOW        ADDB                 ;If signs are same
             BCNDD  OVFLOW,OV     ;then add two numbers
              SACH  CHI
              SACL  CLO           ;Save it in CHICLO
             BCND   CZERO,EQ      ;If CHICLO is zero, goto CZERO
NORMAL       CPL    #0,CHI        ;Compare CHI with 0
             NOP                  ;Dead cycle for XC
             XC     2,TC          ;If CHI is 0
              LACC  CLO,16        ;then normalize only the CLO part
             LAR    AR0,#16       ;AR0 has exponent value
             XC     2,NTC         ;If CHI != 0
              LACC  CHI,16        ;Acc=CHICLO
              ADDS  CLO
             CLRC   SXM           ;Disable sign extension mode
             XC     2,LT          ;If MSB of CLO is 1
              SBRK  1             ;then shift right once
              SFR                 ;and decrement exponent.
             SETC   SXM           ;Enable sign extension mode
             RPT    #13           ;Repeat 14 times
              NORM  *+            ;Normalize
OUTPUT       SACH   CHI           ;Store high part
             SACL   CLO           ;Store low part of the result
             LACC   CEXP
             SAR    AR0,CEXP      ;Save exponent
             RETD                 ;Return delayed
              SUB   CEXP
              SACL  CEXP          ;CEXP=CEXP–AR0
OVFLOW       CLRC   SXM           ;Disable sign extension mode
             SFR                  ;Shift Acc right
             SACH   CHI
             SACL   CLO           ;Save the result
             LACC   CEXP
             ADD    #1            ;Increment exponent by one
             SACL   CEXP          ;Save it
ALTB         LACC   BSIGN         ;Copy sign of B in C
             SACL   CSIGN
             LACC   BEXP          ;Copy exponent of B in C
             SACL   CEXP
             LACC   DIFFEXP
             NEG                  ;since A–B < 0 here
             SAMM   TREG1         ;No. of shifts reqd. for right–justification
             SUB    #32
             BCND   BGRT32,GEQ    ;difference in exponent >= 32
             LACL   ALO
             ADD    AHI,16        ;Acc=AHIALO
```

Example 2–25. Floating-Point Addition Using SATL and SATH Instructions (Continued)

```
             SATL
             SATH                ;Right–justify ALOAHI
             BD     CHKSGN       ;Jump back after next two instructions
              SACL  ALO          ;Save normalized value
              SACH  AHI          ;in ALO and AHI
BGRT32       LACC   BHI          ;If exponent of B > 32
             SACL   CHI          ;then C <– B.
             RETD                ;Return after
              LACC  BLO          ;saving CHI and CLO
              SACL  CLO
AGRT32       LACC   AHI          ;If exponent of A > 32
             SACL   CHI          ;then C <– A.
             LACC   ALO
             SACL   CLO          ;Copy ALO to CLO
             LACC   ASIGN
             SACL   CSIGN        ;Copy ASIGN to CSIGN
             RETD                ;Return after
              LACC  AEXP         ;copying AEXP to CEXP
              SACL  CEXP
```

Example 2–26. Floating-Point Multiplication Using BSAR Instruction

```
             .title 'Floating Point Multiplication Routine'
*;;;;;;;;;;;;;;;;;;;;;;;;;;;;;;;;;;;;;;;;;;;;;;;;;;;;;;;;;;;;;;;;;;;;;;;;;;;;;;;;
*
*      THIS SUBROUTINE MULTIPLIES TWO FLOATING–POINT NUMBERS PRODUCING
*      A NORMALIZED FLOATING–POINT PRODUCT. THE FORMAT OF FLOATING–
*      POINT NUMBERS IS SPECIFIED BELOW.
*
*      INPUT / OUTPUT FORMAT
*      =====================
*      ----------------
*      |  ALL 0 OR 1  |    SIGN WORD
*      ----------------
*
*      ----------------
*      |   16 BITS    |    EXPONENT
*      ----------------
*
*      ----------------
*      |0|   15 BITS  |    HIGH PART OF MANTISSA
*      ----------------
*
*      ----------------
*      |   16 BITS    |    LOW PART OF MANTISSA
*      ----------------
*
*      NOTE THAT EVEN IF THE PRODUCT IS ZERO, SIGN OF THE PRODUCT MAY
*      EITHER BE POSITIVE OR NEGATIVE DEPENDING ON THE INPUTS.
*
*      Key C5x Instructions:
*      BSAR   1–16 bit right barrel arithmetic shift in one cycle
*      CLRC   reset control bit
*      SETC   set control bit
*      BD     branch after executing next two one–word instructions
*             or one two–word instruction
*
*;;;;;;;;;;;;;;;;;;;;;;;;;;;;;;;;;;;;;;;;;;;;;;;;;;;;;;;;;;;;;;;;;;;;;;;;;;;;;;;;
ASIGN        .set   60h          ;Sign, exponent, high and low parts of mantissa
AEXP         .set   61h          ;of input number A
AHI          .set   62h
ALO          .set   63h
BSIGN        .set   64h          ;Sign, exponent, high and low parts of mantissa
BEXP         .set   65h          ;of input number B
BHI          .set   66h
BLO          .set   67h
CSIGN        .set   68h          ;Sign, exponent, high and low parts of mantissa
CEXP         .set   69h          ;of the resulting floating point number C
CHI          .set   6ah
CLO          .set   6bh
```

Example 2–26. Floating-Point Multiplication Using BSAR Instruction (Continued)

```
            .text
MULT        LDP    #0
            MAR    *,AR0         ;ARP <– AR0
            LAR    AR0,#0        ;Reset exponent counter
            SPM    0             ;No left shift of P register
            LACC   AEXP
            ADD    BEXP
            SACL   CEXP          ;CEXP = AEXP + BEXP
            CLRC   SXM           ;for barrel shift, disable sign extension
            LT     ALO           ;T = ALO
            MPYU   BHI           ;P = ALO*BHI
            LTP    AHI           ;Acc=ALO*BHI, T=AHI
            MPYU   BLO           ;P=AHI*BLO
            MPYA   BHI           ;Acc=ALO*BHI + AHI*BLO, P=AHI*BHI
            BSAR   16            ;Retain upper 16 bits plus 1 additional
            APAC                 ;bit due to zero MSBs of BLO & ALO
            BCND   NZERO,NEQ     ;If the product is not zero
            SACH   CHI           ;If the product is zero
            BD     SIGN          ;then clear CHI,CLO and CEXP
             SACL  CLO           ;and jump to SIGN
             SACL  CEXP
NZERO       SFL                  ;Discard additional sign bit (Q63)
            NORM   *+            ;Remove leading zero if any
            SACH   CHI           ;Save product
            SACL   CLO
            SETC   SXM           ;Enable sign extension mode
            LACC   CEXP
            SAR    AR0,CEXP      ;CEXP<–AR0
            SUB    CEXP
            SACL   CEXP          ;CEXP=CEXP–AR0
SIGN        LACL   ASIGN         ;If signs are same then product is +ve
            RETD                 ;Return after next two instructions
             XOR   BSIGN         ;otherwise it is –ve.
             SACL  CSIGN
```

2.10 Application-Oriented Operations

The following subsections provide application-oriented operations for:

- modem applications
- adaptive filtering
- infinite impulse response (IIR) filters
- dynamic programming

2.10.1 Modem Application

Digital signal processors are especially appropriate for modem applications. The ’C5x devices with their enhanced instruction set and reduced instruction cycle time are particularly effective in implementing encoding and decoding algorithms. Features like circular addressing, repeat block, and single-cycle barrel shift reduce the execution time of such routines.

Example 2–27 on page 2-47 shows a differential and convolutional encoder for a 9600-bit/second V.32 modem. This encoder uses trellis coding with 32 carrier states. The data stream to be transmitted is divided into groups of four consecutive data bits. The first two bits in time $Q1_n$ and $Q2_n$ in each group are differentially encoded into $Y1_n$ and $Y2_n$ according to the following equations:

$$Y1_n = Q1_n \oplus Y1_{n-1}$$

$$Y2_n = (Q1_n \bullet Y1_{n-1}) \oplus Y2_{n-1} \oplus Q2_n$$

This is done by a subroutine called DIFF. The two differentially encoded bits Y1n and Y2n are used as inputs to a convolutional encoder subroutine ENCODE, which generates a redundant bit Y0n. These five bits are packed into a single word by the PACK subroutine.

Example 2–27. V.32 Encoder Using Accumulator Buffer

```
             .title 'Convolutional Encoding for a V.32 Modem'
             .mmregs

STATMEM      .set   60h          ;(60h – 62h) Delay States S1,S2,S3
INPUT        .set   64h          ;(64h – 67h) Four input bits
YPAST        .set   68h          ;(68h – 69h) Past values of Y1 and Y2
OUTPUT       .set   63h          ;Y0, the redundant bit
LOCATE       .set   6ah          ;Temporary storage for current input word
PCKD_IP      .set   1000h        ;Input buffer (4 bits packed per word)
PCKD_OP      .set   2000h        ;Output buffer (5 bits packed per word)
COUNT        .set   50           ;# of input data words
             .text
INIT         LAR    AR1,#PCKD_IP
             LAR    AR2,#PCKD_OP
             LAR    AR3,#COUNT–1 ;COUNT contains # of input words
             LDP    #0
START        MAR    *,AR1
             LACC   *+,0,AR0
             SACL   LOCATE       ;Temporary storage for current input word
             LAR    AR0,#INPUT+3
             LACL   #3           ;Loop 4 times
             SAMM   BRCR
             LACL   #1
             SAMM   DBMR         ;Load DBMR with the mask for LSB
UNPACK       LACC   LOCATE       ;Acc = packed input bits
             RPTB   LOOP1–1      ;for I=0,I<=3,I++
              SACL  *            ;Save it
              APL   *–           ;Mask off all bits except LSB
              SFR                ;Shift right to get next bit
LOOP1
             CALL   DIFF         ;Call differential encoder
             CALL   ENCODE       ;Call convolutional encoder
PACK         LAR    AR0,#INPUT
             LACL   #3           ;Loop 4 times only
             SAMM   BRCR
             LACC   *+           ;Get first bit (MSB)
             RPTB   LOOP2–1      ;for I=0,I<=2,I++
              SFL                ;make space by left–shifting once
              ADD   *+           ;Pack next bit by left–shifting other
              NOP
LOOP2
             MAR    *,AR2        ;ARP <– AR2
             SACL   *+,0,AR3     ;Save it in packed form
             BANZ   START        ;Loop if COUNT is not zero
             RET                 ;Return
```

Example 2–27. V.32 Encoder Using Accumulator Buffer (Continued)

```
; This subroutine differentially encodes Q1n and Q2n (INPUT buffer)
; according to previous output values Y1n–1 and Y2n–1 (YPAST buffer).
; The resulting values Y1n and Y2n overwrite previous Q1n and Q2n.
DIFF          LACC   YPAST         ;Acc=Y1n–1
              AND    INPUT         ;Q1n & Y1n–1
              XOR    INPUT+1       ;(Q1n & Y1n–1) xor Q2n
              XOR    YPAST+1       ;(Q1n & Y1n–1) xor Q2n xor Y2n–1
              SACL   INPUT+1
              SACL   YPAST+1       ;Save Y2n
              LACC   YPAST
              XOR    INPUT         ;Q1n xor Y1n–1
              RETD                 ;Delayed return
               SACL  INPUT         ;Save Y1n
               SACL  YPAST         ;save Y1n–1
; This subroutine generates a redundant bit Y0n by convolutional encoding,
; taking Y1n and Y2n as input. Three delay states S1, S2 and S3 are
; located in STATMEM buffer.
ENCODE        LACC   STATMEM
              SACL   OUTPUT        ;Y0 <– S1
              LACC   INPUT+1
              XOR    STATMEM+1     ;Y2 xor S2
              SACB                 ;Save in AccB
              LACC   OUTPUT
              AND    INPUT         ;Y0 & Y1
              XORB                 ;(Y0 & Y1) xor (Y2 xor S2)
              SACL   STATMEM       ;Save it in S1
              LACC   OUTPUT
              ANDB                 ;Y0 & (Y2 xor S2)
              SACB
              LACC   INPUT
              XOR    INPUT+1       ;Y1 xor Y2
              XOR    STATMEM+2     ;(Y1 xor Y2) xor S3
              XORB                 ;((Y1 xor Y2) xor S3) xor (Y0 & (Y2 xor S2))
              SACL   STATMEM+1     ;Update S2
              RETD                 ;Delayed return
               LACC  OUTPUT
               SACL  STATMEM+2     ;Update S3
```

2.10.2 Adaptive Filtering

There are many practical applications of adaptive filtering; one example is in the adapting or updating of coefficients. This can become computationally expensive and time-consuming. The MPYA, ZALR, and RPTB instructions on the ’C5x can reduce execution time.

A means of adapting the coefficients on the ’C5x is the least-mean-square algorithm given by the following equation:

$$b_k(i + 1) = b_k(i) + 2Be(i)x(i–k)$$

where e (i) = x(i) – y(i)
and

$$y(i) = \sum_{k=0}^{N-1} b_k x(i–k)$$

Quantization errors in the updated coefficients can be minimized if the result is obtained by rounding rather than truncating. For each coefficient in the filter at a given point in time, the factor 2Be(i) is a constant. This factor can then be computed once and stored in the TREG0 for each of the updates.

MPYA and ZALR instructions help in reducing the number of instructions in the main adaptation loop. Furthermore, the RPTB (repeat block) instruction allows the block of instructions to be repeated without any penalty for looping.

Example 2–28 on page 2-50 shows a routine that implements a 128-tap finite impulse response (FIR) filter and an LMS adaptation of its coefficients. The SARAM of the ’C5x can be mapped in both the program and data spaces at the same time by setting the OVLY and RAM control flags to 1. This feature can be used to locate the coefficient table in SARAM so that the table can be accessed by the MACD and MPY instructions without modifying the RAM configuration. Note that the MACD instruction requires one of its operands to be in program space.

If the address of the coefficient table is to be determined in runtime, load the BMAR (block move address register) with the address computed dynamically and replace the instruction MACD COEFFP,*– with MADD *– .

Example 2–28. Adaptive FIR Filter Using RPT and RPTB Instructions

```
              .title 'Adaptive Filter'
              .def   ADPFIR
              .def   X,Y
              .mmregs
*
* This 128–tap adaptive FIR filter uses on–chip memory block B0 for
* coefficients and block B1 for data samples. The newest input should be in
* memory location X when called. The output will be in memory location Y
* when returned.
*
* OVLY =1 , RAM =1 when this routine is called.
*
COEFFP        .set   02000h        ;Program memory address of the coeff. in S/A RAM
COEFFD        .set   02000h        ;Data memory address of the coeff. in S/A RAM
*      For 'C51,'C53,'C56,'C57, COEFFD is 0800h instead of 02000h
ONE           .set   7Ah           ;Constant one.             (DP=0).
BETA          .set   7Bh           ;Adaptation constant.      (DP=0).
ERR           .set   7Ch           ;Signal error.             (DP=0).
ERRF          .set   7Dh           ;Error function.           (DP=0).
Y             .set   7Eh           ;Filter output.            (DP=0).
X             .set   037Fh         ;Newest data sample.
FRSTAP        .set   0380h         ;Next newest data sample.
LASTAP        .set   03FFh         ;Oldest data sample.
*
* Finite impulse response (FIR) filter.
*
ADPFIR        ZPR                  ;Clear P register.
              LACC   #1,14         ;Load output rounding bit.
              MAR    *,AR3
              LAR    AR3,#LASTAP   ;Point to oldest sample.
FIR           RPT    #127
               MACD  COEFFP,*–     ;128–tap FIR filter.
              APAC
              SACH   Y,1           ;Store the filter output.
              NEG                  ;Acc = –y(n)
              LAR    AR3,#X
              ADD    *,15          ;Add the newest input sample.
              SACH   ERR,1         ;err(n) = x(n) – y(n)
              DMOV   *             ;Include newest sample
*
* LMS Adaption of Filter Coefficients.
*
              LT     ERR           ;T = err
              MPY    BETA          ;P = beta*err(i)
              PAC                  ;errf(i) = beta * err(i)
              ADD    ONE,14        ;Round the results.
              SACH   ERRF,1        ;Save errf(i)
              LACC   #126
              SAMM   BRCR          ;127 coefficients to update in the loop.
              LAR    AR2,#COEFFD   ;Point to the coefficients.
              LAR    AR3,#LASTAP+1 ;Point to the data samples.
```

Example 2–28. Adaptive FIR Filter Using RPT and RPTB Instructions (Continued)

```
             LT     ERRF
             MPY    *–,AR2        ;P = 2*beta*err(i)*x(i–255)
*
             RPTB   LOOP–1        ;For I=0,I<=126,I++
ADAPT         ZALR  *,AR3         ;Load ACCH with ak(i).
              MPYA  *–,AR2        ;P = 2*beta*err(i)*x(i–k–1)
*                                 Acc = ak(i) + 2*beta*err(i)*x(i–k)
              SACH  *+            ;Store ak(i+1)
*
LOOP         ZALR   *,AR3         ;Finally update last coeff. a0(i)
             RETD                 ;Delayed return
              APAC                ;Acc = a0(i) + 2*beta*err(i)*x(i)
              SACH  *+            ;Save a0(i+1)
```

2.10.3 Infinite Impulse Response (IIR) Filters

Infinite impulse response (IIR) filters are widely used in digital signal processing applications. The transfer function of an IIR filter is given by:

$$H(z) = \frac{b_0 + b_1 z^{-1} + ... + b_M z^{-M}}{1 + a_1 z^{-1} + ... + a_N z^{-N}} = \frac{Y(z)}{X(z)}$$

Figure 2–6 shows a block diagram of an Nth-order, direct-form, type II, IIR filter. In the time domain, an Nth-order IIR filter is represented by the following two difference equations:

At time interval n:

x(n) is the current input sample
y(n) is the output of the IIR filter
$d(n) = x(n) – d(n – 1)a_1 – ... – d(n – N + 1)a_{N – 1}$
$y(n) = d(n)b_0 + d(n – 1)b_1 + ... + d(n – N + 1)b_{N – 1}$

The two equations above can easily be implemented on the ’C5x using the multiply-accumulate instructions (MAC, MACD, MADS, MADD). Note that the second equation also requires a data-move operation to update the state variable sequence d(n). Example 2–29 on page 2-53 implements an Nth-order IIR filter using single-instruction repeat (RPT) and multiply-accumulate (MAC, MACD) instructions.

Figure 2–6. Nth-Order, Direct-Form, Type II, IIR Filter

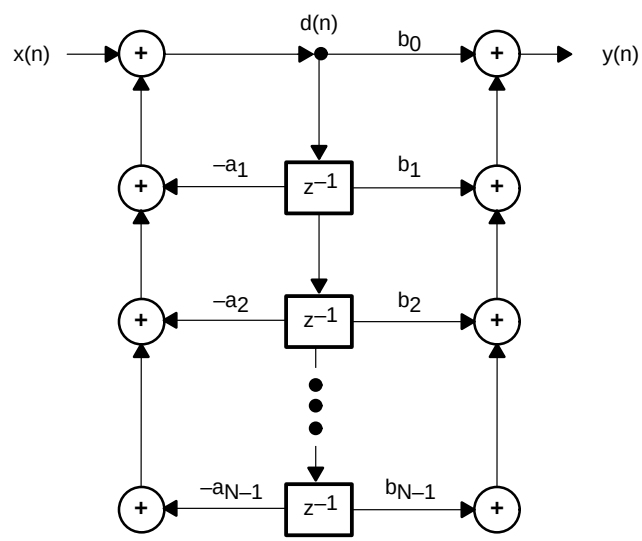

Example 2–29. Nth-Order IIR Filter Using RPT and MACD Instructions

```
             .title ”Nth Order IIR Type II Filter”
             .mmregs
*;;;;;;;;;;;;;;;;;;;;;;;;;;;;;;;;;;;;;;;;;;;;;;;;;;;;;;;;;;;;;;;;;;;;;;;;;;;;;;;;
*
* This routine implements an N–th order type II IIR filter.
*      d(n) = x(n) – d(n–1)a1 – d(n–2)a2 –...– d(n–N+1)aN–1
*      y(n) = d(n)b0 + (dn–1)b1 +...+ d(n–N+1)bN–1
*
* Memory Requirement:
*   State variables (low to high data memory):
*      d(n) d(n–1) ... d(n–N+1)
*
* Coefficient (low to high program memory):
*      –a(N–1) –a(N–2) ... –a(1) b(N–1) b(N–2) ... b(1) b(0)
*
* Entry Conditions:
*      AR0 –> Input
*      AR1 –> d(n–N+1)
*      AR2 –> Output
*      COEFFA –> –a(N–1)
*      COEFFB –> b(N–1)
*      ARP = AR0
*
*;;;;;;;;;;;;;;;;;;;;;;;;;;;;;;;;;;;;;;;;;;;;;;;;;;;;;;;;;;;;;;;;;;;;;;;;;;;;;;;;
IIR_N:       ZPR                      ;Clear P register
             LACC   *,15,AR1          ;Get Q15 input
             RPT    #(N–2)            ;For i=1,i<=N–1,++i
              MAC   COEFFA,*–         ;Acc+=–a(N–i))*d(n–N+i)
             APAC                     ;Final accumulation
             SACH   *,1               ;Save d(n)
             ADRK   N–1               ;AR1 –> d(n–N+1)
             LAMM   BMAR              ;Acc –> a(N–1)
             ADD    #N–1              ;Acc –> b(N–1)
             SAMM   BMAR              ;BMAR –> b(N–1)
             RPTZ   #(N–1)            ;For i=1,i<=N,++i
              MACD  COEFFB,*–         ;Acc+=b(N–i)*d(n–N+i)
             LTA    *,AR2             ;Final accumulation
             SACH   *,1               ;Save Yn
```

Due to the recursive nature of an IIR filter, quantization of filter coefficients may cause significant variation from the desired frequency response. To avoid this problem, the desired filter transfer function can be broken up into lower order sections that are cascaded with each other. Example 2–30 on page 2-54 shows an implementation of N cascaded second-order IIR sections (also called biquad sections). The filter coefficients and the state variables are stored in data memory. Note the use of LTD and MPYA instructions to perform multiply-accumulate and data-move operations.

Example 2–30. N Cascaded BiQuad IIR Filter Using LTD and MPYA Instructions

```
             .title ”N Cascaded BiQuad IIR Filters”
             .mmregs
*;;;;;;;;;;;;;;;;;;;;;;;;;;;;;;;;;;;;;;;;;;;;;;;;;;;;;;;;;;;;;;;;;;;;;;;;;;;;;;;;
*
* This routine implements N cascaded blocks of biquad IIR canonic type II
* filters. Each biquad requires 3 data memory locations d(n),d(n–1),d(n–2),
* and 5 coefficients –a1,–a2,b0,b1,b2.
* For each block:   d(n) = x(n)–d(n–1)a1–d(n–2)a2
*                   y(n) = d(n)b0+d(n–1)b1+d(n–2)b2
*
* Coefficients Storage (low to high data memory):
*                   –a2,–a1,b2,b1,b0, ... ,–a2,–a1,b2,b1,b0
*                   1st biquad                Nth biquad
*
* State Variables (low to high data memory):
*                   d(n),d(n–1),d(n–2), ... ,d(n),d(n–1),d(n–2)
*                   Nth biquad                1st biquad
*
* Entry Conditions:
*      AR1 –> d(n–2) of 1st biquad
*      AR2 –> –a2 of 1st biquad
*      AR3 –> input sample (Q15 number)
*      AR4 –> output sample (Q15 number)
*      DP = 0, PM = 0, ARP = 3
*
*;;;;;;;;;;;;;;;;;;;;;;;;;;;;;;;;;;;;;;;;;;;;;;;;;;;;;;;;;;;;;;;;;;;;;;;;;;;;;;;;
BIQUAD:                                  ;Setup variables
             ZPR                         ;Clear P register
             LACC   *,15,AR1             ;Get Q15 input
             SPLK   #2,INDX              ;Setup index register
             SPLK   #N–1,BRCR            ;Setup count
                                         ;Begin computation;
             RPTB   ELOOP–1              ;Repeat for N biquads
LOOP:
             LT     *–,AR2               ;T = d(n–2)
             MPYA   *+,AR1               ;Acc = x(n), P = –d(n–2)a2
             LTA    *–,AR2               ;Acc += –d(n–2)a2, T = d(n–1)
             MPY    *+                   ;P = –d(n–1)a1
             LTA    *+,AR1               ;Acc += –d(n–1)a1, T = b2
             SACH   *0+,1                ;Save d(n)
             MPY    *–                   ;P = d(n–2)b2
             LACL   #0                   ;Acc = 0
             LTD    *–,AR2               ;T = d(n–1), d(n–2) = d(n–1)
             MPY    *+,AR1               ;Acc += d(n–2)b2, P = d(n–1)b1
             LTD    *–,AR2               ;T = d(n), d(n–1) = d(n)
             MPY    *+,AR1               ;Acc += d(n–1)b1, P = d(n)b0
ELOOP:
             LTA    *,AR4                ;Final accumulation
             SACH   *,1                  ;Save output in Q15 format
```

2.10.4 Dynamic Programming

Dynamic programming techniques are widely used in optimal search algorithms. Applications such as speech recognition, telecommunications, and robotics use dynamic programming algorithms. The ’C5x devices have an enhanced instruction set for efficient implementation of dynamic programming methods.

Most real-time search algorithms use the basic dynamic programming principle that the final optimal path from the start state to the goal state always passes through an optimal path from the start state to an intermediate state. Identifying intermediate paths reduces a long, time-consuming search to the final goal. An integral part of any optimal search scheme based on the dynamic programming principle is the backtracking operation. The backtracking is necessary to retrace the optimal path when the goal state is reached.

Example 2–31 on page 2-56 shows an implementation of the backtracking algorithm in which the path history consists of four independent path traces for *N* time periods. This path history is stored in a circular buffer. After each backtracking operation, the path history is updated by a search algorithm (not shown) for the next time period. The path history buffer is shown in Figure 2–7 for *N* equal to 4. Each group of four consecutive memory locations in the buffer corresponds to the expansion of the four paths by one node (or by one time period). Each element of a group corresponds to one of the four states in that time period. In addition, each element of a group points to an element in the previous time period that belongs to that path.

Using the path history buffer shown in Figure 2–7, the element corresponding to state #0 at the current time period contains a 1. This points to the second element of the previous time period that contains a 0. In this way, beginning from the current time period and using pointers to step back in time, this path is traced back as 1–0–2–1. Note that this simplified backtracking approach is taken here to illustrate ’C5x programming techniques. Most real applications would require more complex backtracking algorithms.

Example 2–31. Backtracking Algorithm Using Circular Addressing

```
*
* Backtracking Example
* This program back–tracks the optimal path expanded by a dynamic programming
* algorithm. The path history consists of four paths expanded N times.
* It is set up as a circular buffer of length N*4. Note that decrement
* type circular buffer is used. The start and end address of the circular
* buffer are initialized this way because of two reasons:
*      1– to avoid skipping the end–address of circ buffer
*      2– to ensure that wrap–around is complete before next iteration.
*
       LAR    AR0,#BUFFER         ;Get buffer address
       LMMR   INDX,PATH           ;Get the selected path [0..3]
       SPLK   #N–1,BRCR           ;Trace back N time periods
* init. AR0 as pointer to circular buffer#1; length=N*4 words
       SPLK   #BUFFER+(N–1)*4,CBSR1
       SPLK   #BUFFER–3,CBER1
       SPLK   #08h,CBCR
*
       RPTB   TLOOP–1             ;For i=0,i<N,i++
       MAR    *0+                 ;Offset by state#
       LACC   *0–                 ;Get next pointer & reset to state#0
       SAMM   INDX                ;Save next state#
       SBRK   3                   ;Decrement AR0 to avoid skipping CBER1
       SBRK   1                   ;Now AR0 is correctly positioned 1 time
TLOOP:                            ;period back (circular addressing)
```

Figure 2–7. Backtracking With Path History

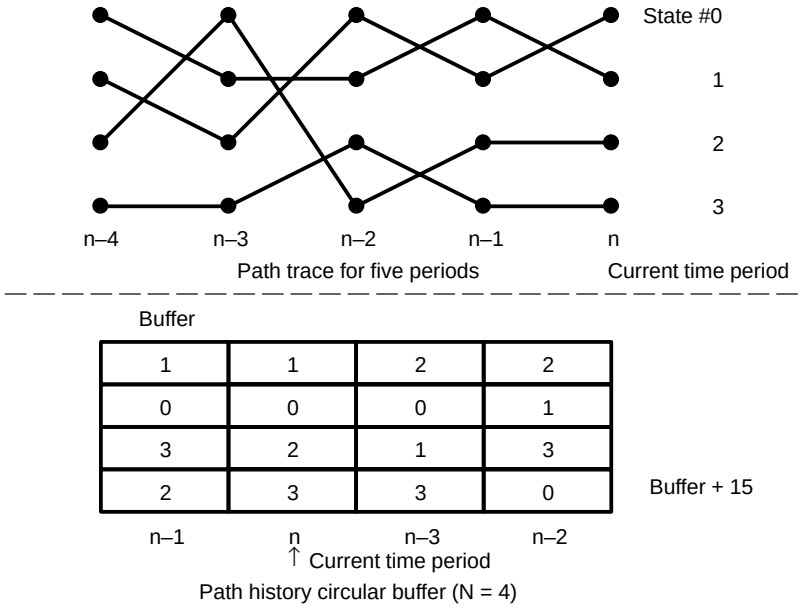

2.11 Fast Fourier Transforms

Fourier transforms are an important tool often used in digital signal processing systems. The purpose of the transform is to convert information from the time domain to the frequency domain. The inverse Fourier transform converts information back to the time domain from the frequency domain. Computationally efficient implementations of the Fourier transforms are known as fast Fourier transforms (FFT).

The ’C5x reduces the execution time of all FFTs by virtue of its 50-ns instruction cycle time. Also, the bit-reversed addressing mode helps reduce execution time for radix-2 FFTs. As demonstrated in Figure 2–8 and Figure 2–9, the inputs or outputs of an FFT are not in sequential order. This scrambling of data locations is a direct result of the radix-2 FFT derivation. Observation of the figures and the relationship of the input and output addressing reveal that the address indexing is in bit-reversed order, as shown in Table 2–3. As a result, either the input data sequence or the output data sequence must be scrambled in association with the execution of the FFT. In Example 2–32 on page 2-59, the input data is scrambled before the execution of the FFT algorithm so that the output is in order.

Figure 2–8. An In-Place DIT FFT With In-Order Outputs and Bit-Reversed Inputs

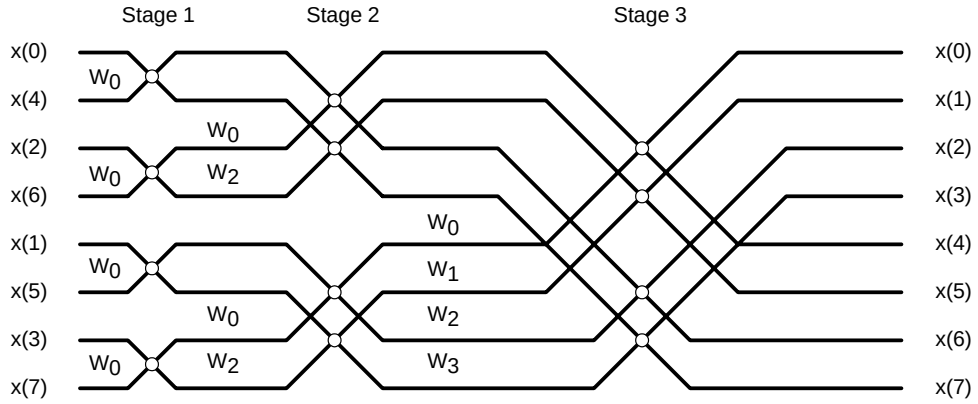

Legend for twiddle factor : $W_0 = W_8^0$ $W_1 = W_8^1$ $W_2 = W_8^2$ $W_3 = W_8^3$

Figure 2–9. An In-Place DIT FFT With In-Order Inputs but Bit-Reversed Outputs

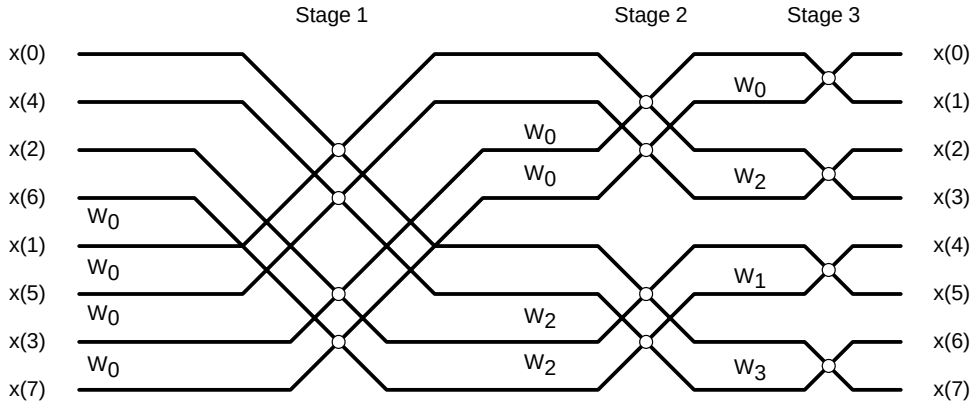

Legend for twiddle factor : $W_0 = W_8^0$ $W_1 = W_8^1$ $W_2 = W_8^2$ $W_3 = W_8^3$

Table 2–3. Bit-Reversal Algorithm for an 8-Point Radix-2 DIT FFT

Index	Bit Pattern	Bit-Reversed Pattern	Bit-Reversed Index
0	000	000	0
1	001	100	4
2	010	010	2
3	011	110	6
4	100	001	1
5	101	101	5
6	110	011	3
7	111	111	7

Example 2–32. 16-Point Radix-2 Complex FFT

```
             .file        "c5cx0016.asm"
             .title       "0016 point DIT Radix–2, Complex FFT"
             .width       120
N            .set         16           ;NUMBER OF POINTS FOR FFT
             .mmregs
pmstmask     .set         0110b        ;ndx=trm=1
*
*****************************************************************************
*                                                                           *
*     16 – POINT COMPLEX, RADIX–2 DIF FFT WITH THE TMS320C5x / LOOPED CODE  *
*     ___________________________________________________________________   *
*****************************************************************************
* THE PROGRAM IS BASED ON THE BOOK 'DIGITAL SIGNAL PROCESSING APPLICATIONS'  *
* FROM TEXAS INSTRUMENTS P. 69. IT IS OPTIMIZED FOR THE TMS320C5x INCLUDING  *
* BIT REVERSAL ADDRESSING MODE.                                              *
*                                                                            *
*****************************************************************************
*                                                                            *
*    USED REGISTERS: INDX,AR1,AR2,AR3,AR4,AR5,ACCU,PREG,TREG0, PMST, BRCR    *
*                    2 Stacklevel, Block B2 for temp variables               *
*                                                                            *
*    PROGRAM MEMORY:  164 WORDS ('END' – 'FFT') WITHOUT INITIALIZATION       *
*                                                                            *
*    COEFFICIENTS  :   16 BITS  (Q15 Format)  SCALING:   1/2^4               *
*                                                                            *
*    PROGRAM SEQUENCE:0.   INITIALIZATION FOR FFT/COEFF    ADD: 240H –  20BH *
*                     1.   INPUT NEW DATA INTO 'INPUT'     ADD: 220H –  23FH *
*                     2.   CALL SUBROUTINE FFT             ADD: 600H –  6A3H *
*                     2.1. BITREVERSAL FROM INPUT TO DATA  ADD: 200H –  21FH *
*                     2.2. FFT WITH WORK SPACE DATA        ADD: 200H –  21FH *
*                     3.   OUTPUT THE RESULTS FROM DATA    ADD: 200H –  21FH *
*                                                                            *
*    INPUT DATA AT ADDRESS 0220h–023fh:                                      *
*    __________________________________                                      *
*    THE DATA IS STORED IN 'INPUT' AS THE SEQUENCE: X(0),X(1),...,X(15)      *
*                                                   Y(0),Y(1),...,Y(15)      *
*                                                                            *
*    OUTPUT DATA AT ADDRESS 0200h–021fh:                                     *
*    ___________________________________                                     *
*    THE DATA IS STORED IN 'DATA' AS THE SEQUENCE:                           *
*    X(0),Y(0),X(1),Y(1),... ... ,X(15),Y(15)                                *
*****************************************************************************
*                                                                            *
*    THIS PROGRAM INCLUDES FOLLOWING FILE:                                   *
*    _____________________________________                                   *
*    THE FILE 'TWIDDLES.Q15' CONSISTS OF TWIDDLE FACTORS IN Q15 FORMAT       *
*    THE FILE 'C5CXRAD2.MAC' macro files                                     *
*    THE FILE 'INIT–FFT.ASM' for initialization                              *
*****************************************************************************
*
```

Example 2–32. 16-Point Radix-2 Complex FFT (Continued)

```
             .include     C5CXRAD2.MAC
             .def         TWIDLEN,FFTLEN,TEMP,WAIT,cos45
             .def         INIT,FFT,TWIDSTRT,TWIDEND
             .def         STAGE1,STAGE3,STAGE4,INPUT,DATA,TWID
;
             .sect        ”twiddles”
; table of twiddle factors for the FFT
TWIDSTRT     .set         $
             .include     twiddles.q15
TWIDEND      .set         $
TWIDLEN      .set         TWIDEND–TWIDSTRT
*
INPUT        .usect       ”input”,N*2  ;input data array
DATA         .usect       ”data”,N*2   ;working data array
TWID         .usect       ”twid”,N*2   ;reserve space for twiddles
*
*            .include     init–fft.asm
*
             .sect        ”fftprogram”
*
*      FFT CODE WITH BIT–REVERSED INPUT SAMPLES / ARP=AR3
*
FFT:         LAR    AR3,DATAADD         ;TRANSFER  32 WORDS FROM ’input’ to ’data’
             LACC   NN
             SAMM   INDX                ;indexregister=7
             RPT    NN2                 ;N TIMES
             BLDD   #INPUT,*BR0+
*
*            FFT CODE for STAGES 1 and 2
*
STAGE1:      SPLK   #7,INDX             ;index register = 7
             LAR    AR1,DATAADD         ;pointer to DATA r1,i1
             LAR    AR2,#DATA+2         ;pointer to DATA + 2 r2,i2
             LAR    AR3,#DATA+4         ;pointer to DATA + 4 r3,i3
             LAR    AR4,#DATA+6         ;pointer to DATA + 6 r4,i4
             COMBO5X 4                  ;repeat 4 times
*
*      FFT CODE FOR STAGE 3  /  ARP=AR2
*
STAGE3:      SPLK   #9,INDX             ;index register = 9
             LAR    AR1,DATAADD         ;ar1 –> DATA
             LAR    AR2,#DATA+8         ;ar2 –> DATA+8
             stage3 2                   ;repeat 2 times
*
*      FFT CODE FOR STAGE 4  / ARP=ARP
*
```

Example 2–32. 16-Point Radix-2 Complex FFT (Continued)

```
STAGE4:      SPLK   #1,INDX            ;index register = 1
             LAR    AR1,DATAADD
             LAR    AR2,#DATA+16
             LAR    AR3,cos4           ;start of cosine in stage 4
             LAR    AR4,sin4           ;start of sine in stage   4
             SPLK   #6,BRCR
             ZEROI                     ;execute ZEROI
             BUTTFLYI                  ;execute 7 times BUTTFLYI
             RET
END:         .set   $
FFTLEN       .set   END–FFT+1
             .end
```

The bit-reversed addressing mode is part of the indirect addressing implemented with the auxiliary registers and the associated arithmetic unit. In this mode, a value (index) contained in INDX is either added to or subtracted from the auxiliary register being pointed to by the ARP. However, the carry bit is not propagated in the forward direction; instead, it is propagated in the reverse direction. The result is a scrambling in the address access.

The procedure for generating the bit-reversed address sequence is to load INDX with a value corresponding to one-half the length of the FFT and to load another auxiliary register—for example, AR1—with the base address of the data array. However, implementations of FFTs involve complex arithmetic; as a result, two data memory locations (one real and one imaginary) are associated with each data sample. For ease of addressing, the samples are stored in workspace memory in pairs with the real part in the even address locations and the imaginary part in the odd address locations. This means that the offset from the base address for any given sample is twice the sample index. If the incoming data is in the following form:

XR(0), XR(1), ..., XR(7), XI(0), XI(1), ..., XI(7)

where
XR – real component of input sample
XI – imaginary component of input sample

then it is easily transferred into the data memory and stored in the scrambled order:

XR(0), XI(0), XR(4), XI(4), XR(2), XI(2), ..., XR(7), XI(7)

by loading INDX register with the size of FFT and by using bit-reversed addressing to save each input word. Example 2–33 on page 2-62 shows the contents of auxiliary register AR1 when INDX is initialized with a value of 8.

Example 2–33. Bit-Reversed Addressing for an FFT

```
       MSB                                LSB
INDX   0 0 0 0  0 0 0 0  0 0 0 0  1 0 0 0      FOR 8-POINT FFT
AR1    0 0 0 0  0 0 1 0  0 0 0 0  0 0 0 0      BASE ADDRESS
       RPT    15
       BLDD   #INPUT,*BR0+
AR1    0 0 0 0  0 0 1 0  0 0 0 0  0 0 0 0      XR(0)
AR1    0 0 0 0  0 0 1 0  0 0 0 0  1 0 0 0      XR(4)
AR1    0 0 0 0  0 0 1 0  0 0 0 0  0 1 0 0      XR(2)
AR1    0 0 0 0  0 0 1 0  0 0 0 0  1 1 0 0      XR(6)
AR1    0 0 0 0  0 0 1 0  0 0 0 0  0 0 1 0      XR(1)
AR1    0 0 0 0  0 0 1 0  0 0 0 0  1 0 1 0      XR(5)
AR1    0 0 0 0  0 0 1 0  0 0 0 0  0 1 1 0      XR(3)
AR1    0 0 0 0  0 0 1 0  0 0 0 0  1 1 1 0      XR(7)
AR1    0 0 0 0  0 0 1 0  0 0 0 0  0 0 0 1      XI(0)
AR1    0 0 0 0  0 0 1 0  0 0 0 0  1 0 0 1      XI(4)
AR1    0 0 0 0  0 0 1 0  0 0 0 0  0 1 0 1      XI(2)
AR1    0 0 0 0  0 0 1 0  0 0 0 0  1 1 0 1      XI(6)
AR1    0 0 0 0  0 0 1 0  0 0 0 0  0 0 1 1      XI(1)
AR1    0 0 0 0  0 0 1 0  0 0 0 0  1 0 1 1      XI(5)
AR1    0 0 0 0  0 0 1 0  0 0 0 0  0 1 1 1      XI(3)
AR1    0 0 0 0  0 0 1 0  0 0 0 0  1 1 1 1      XI(7)
```

Example 2–34 on page 2-63 provides macros for a 16-point FFT. Example 2–35 on page 2-69 provides an initialization routine.

Example 2–34. Macros for 16-Point DIT FFT

```
*******************************************************************************
* FILE: c5cxrad2.mac –-> macro file for radix 2 fft's based on 320c5x          *
*                                                                              *
* COPYRIGHT TEXAS INSTRUMENTS INC. 1990                                        *
*******************************************************************************
*                                                                              *
* MACRO 'COMBO2X' FOR THE COMPLEX, RADIX–2 DIT FFT                             *
*                                                                              *
* ORGANIZATION OF THE INPUT DATA MEMORY: R1,I1,R2,I2,R3,I3,R4,I4               *
*                                                                              *
*******************************************************************************
*                                                                              *
* THE MACRO 'COMBO2x' PERFORMS FOLLOWING CALCULATIONS:                         *
*                                                                              *
* R1   := [(R1+R2)+(R3+R4)]/4    INPUT                  OUTPUT                 *
* R2   := [(R1–R2)+(I3–I4)]/4    ------------------     ------------------     *
* R3   := [(R1+R2)–(R3+R4)]/4    AR0 =  7                                      *
* R4   := [(R1–R2)–(I3–I4)]/4    AR1 –> R1,I1           AR1 – > R5,I5          *
* I1   := [(I1+I2)+(I3+I4)]/4    AR2 –> R2,I2           AR2 – > R6,I6          *
* I2   := [(I1–I2)–(R3–R4)]/4    ARP–> AR3 –> R3,I3     ARP – > AR3 – > R7,I7  *
* I3   := [(I1+I2)–(I3+I4)]/4    AR4 –> R4,I4           AR4 – > R8,I8          *
* I4   := [(I1–I2)+(R3–R4)]/4                                                  *
*                                                                              *
* For a 16–point Radix 2 complex FFT the Macro 'COMBO2x' has to be             *
* repeated N/4 times (e.g. 4  times for a  16 point FFT).                      *
*                                                                              *
*******************************************************************************
COMBO5x   $MACRO num              ; REPEAT MACRO 'COMBO5x': N/4 times
          SPLK   #:num:–1,BRCR    ; execute 'num' times 'COMBO5x'
*
          RPTB   comboend  ;                                ARP AR1 AR2 AR3 AR4 AR5
*                                                           --- --- --- --- --- ---
          LACC   *,14,AR4  ;ACC   :=(R3)/4                  4   R1  R2  R3  R4  T1
          SUB    *,14,AR5  ;ACC   :=(R3–R4)/4               5   R1  R2  R3  R4  T1
          SACH   *+,1,AR4  ;T1     =(R3–R4)/2                4   R1  R2  I3  R4  T2
*
          ADD    *+,15,AR5 ;ACC   :=R3+R4)/4                5   R1  R2  R3  I4  T2
          SACH   *,1,AR2   ;T2     =(R3+R4)/2                2   R1  R2  R3  I4  T2
*
          ADD    *,14,AR1  ;ACC   :=(R2+R3+R4)/4            1   R1  R2  R3  I4  T2
          ADD    *,14      ;ACC   :=(R1+R2+R3+R4)/4         1   R1  R2  R3  I4  T2
          SACH   *+,0,AR5  ;R1    :=(R1+R2+R3+R4)/4         5   I1  R2  R3  I4  T2
          SUB    *,16,AR3  ;ACC   :=(R1+R2–(R3+R4))/4       3   I1  R2  R3  I4  T2
          SACH   *+,0,AR5  ;R3    :=(R1+R2–(R3+R4))/4       5   I1  R2  I3  I4  T2
```

Example 2–34. Macros for 16-Point DIT FFT (Continued)

```
*
          ADD    *,15,AR2  ;ACC   :=(R1+R2)/4                2  I1  R2  I3  I4  T2
          SUB    *,15,AR3  ;ACC   :=(R1–R2)/4                3  I1  R2  I3  I4  T2
          ADD    *,14,AR4  ;ACC   :=((R1–R2)+(I3))/4         4  I1  R2  I3  I4  T2
          SUB    *,14,AR2  ;ACC   :=((R1–R2)+(I3–I4))/4      2  I1  R2  I3  I4  T2
          SACH   *+,0,AR4  ;R2    :=((R1–R2)+(I3–I4))/4      4  I1  I2  I3  I4  T2
          ADD    *–,15,AR3 ;ACC   :=((R1–R2)+I3+I4)/4        3  I1  I2  I3  R4  T2
          SUB    *,15,AR4  ;ACC   :=((R1–R2)–(I3–I4))/4      4  I1  I2  I3  R4  T2
          SACH   *+,0,AR1  ;R4    :=((R1–R2)–(I3–I4))/4      1  I1  I2  I3  I4  T2
*
          LACC   *,14,AR2  ;ACC   :=(I1)/4                   2  I1  I2  I3  I4  T2
          SUB    *,14,AR5  ;ACC   :=(I1–I2)/4                5  I1  I2  I3  I4  T2
          SACH   *,1,AR2   ;T2    :=(I1–I2)/2                2  I1  I2  I3  I4  T2
          ADD    *,15,AR3  ;ACC   :=((I1+I2))/4              4  I1  I2  I3  I4  T2
          ADD    *,14,AR4  ;ACC   :=((I1+I2)+(I3))/4         4  I1  I2  I3  I4  T2
          ADD    *,14,AR1  ;ACC   :=((I1+I2)+(I3+I4))/4      1  I1  I2  I3  I4  T2
          SACH   *0+,0,AR3 ;I1    :=((I1+I2)+(I3+I4))/4      3  R5  I2  I3  I4  T2
          SUB    *,15,AR4  ;ACC   :=((I1+I2)–(I3+I4))/4      4  R5  I2  I3  I4  T2
          SUB    *,15,AR3  ;ACC   :=((I1+I2)–(I3+I4))/4      3  R5  I2  I3  I4  T2
          SACH   *0+,0,AR5 ;I3    :=((I1+I2)–(I3+I4))/4      5  R5  I2  R7  I4  T2
*
          LACC   *–,15     ;ACC   :=(I1–I2)/4                5  R5  I2  R7  I4  T1
          SUB    *,15,AR2  ;ACC   :=((I1–I2)–(R3–R4))/4      2  R5  I2  R7  I4  T1
          SACH   *0+,0,AR5 ;I2    :=((I1–I2)–(R3–R4))/4      5  R5  R6  R7  I4  T1
          ADD    *,16,AR4  ;ACC   :=((I1–I2)+(R3–R4))/4      4  R5  R6  R7  I4  T1
comboend:
          SACH   *0+,0,AR3 ;I4    :=((I1–I2)+(R3–R4))/4      3  R5  R6  R7  R8  T1
*
          MAR    *,AR2     ;ARP=AR2
          $ENDM
*******************************************************************************
*                                                                             *
*      MACRO  'ZEROI'       number of words : 10                              *
*                                                                             *
*      ARP=2 FOR INPUT AND OUTPUT                                             *
*      AR2 –> QR,QI,QR+1,...                                                  *
*      AR3 –> PR,PI,PR+1,...                                                  *
*                                                                             *
*      CALCULATE Re[P+Q] AND Re[P–Q]                                          *
*      QR'=(PR–QR)/2                                                          *
*      PR'=(PR+QR)/2                                                          *
*      PI'=(PI+QI)/2                                                          *
*      PI'=(PI–QI)/2                                                          *
*                                                                             *
*******************************************************************************
ZEROI     $MACRO           ;                                   AR1    AR2    ARP
*                                                              ---    ---    ---
          LACC   *,15,AR1  ;ACC   :=(1/2)(QR)                  PR     QR     1
          ADD    *,15      ;ACC   :=(1/2)(PR+QR)               PR     QR     1
          SACH   *+,0,AR2  ;PR    :=(1/2)(PR+QR)               PI     QR     2
          SUB    *,16      ;ACC   :=(1/2)(PR+QR)–(QR)          PI     QR     2
          SACH   *+        ;QR    :=(1/2)(PR–QR)               PI     QI     2
```

Example 2–34. Macros for 16-Point DIT FFT (Continued)

```
*
          LACC   *,15,AR1  ;ACC   :=(1/2)(QI)                  PI     QI     1
          ADD    *,15      ;ACC   :=(1/2)(PI+QI)               PI     QI     1
          SACH   *+,0,AR2  ;PI    :=(1/2)(PI+QI)               PR+1   QI     2
          SUB    *,16      ;ACC   :=(1/2)(PI+QI)-(QI)          PR+1   QI     2
          SACH   *+        ;QI    :=(1/2)(PI-QI)               PR+1   QR+1   2
          $ENDM
*******************************************************************************
*                                                                             *
*      MACRO  'PBY2I'      number of words: 12                                *
*                                                                             *
*      PR'=(PR+QI)/2       PI'=(PI-QR)/2                                      *
*      QR'=(PR-QI)/2       QI'=(PI+QR)/2                                      *
*                                                                             *
*                                                                             *
*******************************************************************************
PBY2I     $MACRO           ;                                  AR1    AR2    ARP
*                                                             ---    ---    ---
          LACC   *+,15,AR5 ;                                  PR     QI     5
          SACH   *,1,AR2   ;TMP=QR                            PR     QI     2
*
          LACC   *,15,AR1  ;ACC   :=QI/2                      PR     QI     1
          ADD    *,15      ;ACC   :=(PR+QI)/2                  PR     QI     1
          SACH   *+,0,AR2  ;PR    :=(PR+QI)/2                  PI     QI     2
          SUB    *-,16     ;ACC   :=(PR-QI)/2                  PI     QR     2
          SACH   *+,0,AR1  ;QR    :=(PR-QI)/2                  PI     QI     1
*
          LACC   *,15,AR5  ;ACC   :=(PI)/2                    PI     QI     5
          SUB    *,15,AR1  ;ACC   :=(PI-QR)/2                 PI     QI     1
          SACH   *+,0,AR5  ;PI    :=(PI-QR)/2                  PR+1   QI     5
          ADD    *,16,AR2  ;ACC   :=(PI+QR)/2                 PR+1   QI     2
          SACH   *+        ;QI    :=(PI+QR)/2                  PR+1   QI+1   2
          $ENDM
*******************************************************************************
*                                                                             *
*      MACRO  'PBY4J'      number of words: 16                                *
*                                                                             *
*      T=SIN(45)=COS(45)=W45                                                  *
*                                                                             *
*      PR'= PR + (W*QI + W*QR) = PR + W * QI + W * QR    (<- AR1)             *
*      QR'= PR - (W*QI + W*QR) = PR - W * QI - W * QR    (<- AR2)             *
*      PI'= PI + (W*QI - W*QR) = PI + W * QI - W * QR    (<- AR1+1)           *
*      QI'= PI - (W*QI - W*QR) = PI - W * QI + W * QR    (<- AR1+2)           *
*                                                                             *
*******************************************************************************
```

Example 2–34. Macros for 16-Point DIT FFT (Continued)

```
PBY4J     $MACRO           ;TREG  =W                   AR5     PREG    AR1  AR2  ARP
*                                                      ---     ----    ---  ---  ---
          MPY    *+,AR5    ;PREG  =W*QR/2               –      W*QR/2  PR   QI    5
          SPH    *,AR1     ;TMP   =W*QR/2             W*QR/2  W*QR/2  PR   QI    1
          LACC   *,15,AR2  ;ACC   =PR/2               W*QR/2  W*QR/2  PR   QI    2
          MPYS   *–        ;ACC   =(PR–W*QR)/2        W*QR/2  W*QI/2  PR   QR    2
          SPAC             ;ACC   =(PR–W*QI–W*QR)/2   W*QR/2  W*QI/2  PR   QR    2
          SACH   *+,0,AR1  ;QR    =(PR–W*QI–W*QR)/2   W*QR/2  W*QI/2  PR   QI    1
          SUB    *,16      ;ACC   =(–PR–W*QI–W*QR)/2  W*QR/2  W*QI/2  PR   QI    1
          NEG              ;ACC   =(PR+W*QI+W*QR)/2   W*QR/2  W*QI/2  PR   QI    1
          SACH   *+        ;QR    =(PR+W*QI+W*QR)/2   W*QR/2  W*QI/2  PI   QI    1
*
          LACC   *,15,AR5  ;ACC   =(PI)/2             W*QR/2  W*QI/2  PI   QI    5
          SPAC             ;ACC   =(PI–W*QI)/2        W*QR/2   –      PI   QI    5
          ADD    *,16,AR2  ;ACC   =(PI–W*QI+W*QR)/2    –       –      PI   QI    2
          SACH   *+,0,AR1  ;QI    =(PI–W*QI+W*QR)/2    –       –      PI   QR1   1
          SUB    *,16      ;ACCU  =(–PI–W*QI+W*QR)/2   –       –      PI   QR1   1
          NEG              ;ACCU  =(PI+W*QI–W*QR)/2    –       –      PI   QR1   1
          SACH   *+,0,AR2  ;PI    =(PI+W*QI–W*QR)/2    –       –      PR1  QR1   2
          $ENDM
*******************************************************************************
*                                                                             *
*      MACRO  'P3BY4J'      number of words: 16                               *
*                                                                             *
*   ENTRANCE IN THE MACRO:  ARP=AR2                                           *
*                           AR1–>PR,PI                                        *
*                           AR2–>QR,QI                                        *
*                           TREG=W=COS(45)=SIN(45)                            *
*                                                                             *
*      PR'= PR + (W*QI – W*QR) = PR + W * QI – W * QR    (<– AR1)             *
*      QR'= PR – (W*QI – W*QR) = PR – W * QI + W * QR    (<– AR2)             *
*      PI'= PI – (W*QI + W*QR) = PI – W * QI – W * QR    (<– AR1+1)           *
*      QI'= PI + (W*QI + W*QR) = PI + W * QI + W * QR    (<– AR1+2)           *
*                                                                             *
*   EXIT OF THE MACRO:      ARP=AR2                                           *
*                           AR1–>PR+1,PI+1                                    *
*                           AR2–>QR+1,QI+1                                    *
*                                                                             *
*******************************************************************************
P3BY4J    $MACRO           ;TREG  =W                   AR5     PREG    AR1  AR2  ARP
*                                                      ---     ----    ---  ---  ---
          MPY    *+,AR5    ;PREG  =W*QR/2               –      W*QR/2  PR   QI    5
          SPH    *,AR1     ;TMP   =W*QR/2             W*QR/2  W*QR/2  PR   QI    1
          LACC   *,15,AR2  ;ACC   =PR/2               W*QR/2  W*QR/2  PR   QI    2
          MPYA   *–        ;ACC   =(PR+W*QR)/2        W*QR/2  W*QI/2  PR   QR    2
          SPAC             ;ACC   =(PR–W*QI+W*QR)/2   W*QR/2  W*QI/2  PR   QR    2
          SACH   *+,0,AR1  ;QR'   =(PR–W*QI+W*QR)/2   W*QR/2  W*QI/2  PR   QI    1
          SUB    *,16      ;ACC   =(–PR–W*QI+W*QR)/2  W*QR/2  W*QI/2  PR   QI    1
          NEG              ;ACC   =(PR+W*QI–W*QR)/2   W*QR/2  W*QI/2  PR   QI    1
          SACH   *+        ;PR'   =(PR+W*QI–W*QR)/2   W*QR/2  W*QI/2  PI   QI    1
```

Example 2–34. Macros for 16-Point DIT FFT (Continued)

```
*
          LACC   *,15,AR5  ;ACC   =(PI)/2             W*QR/2  W*QI/2  PI   QI    5
          APAC             ;ACC   =(PI+W*QI)/2        W*QR/2   –      PI   QI    5
          ADD    *,16,AR2  ;ACC   =(PI+W*QI+W*QR)/2    –       –      PI   QI    2
          SACH   *0+,0,AR1 ;QI’   =(PI+W*QI+W*QR)/2    –       –      PI   QR5   1
          SUB    *,16      ;ACCU  =(–PI+W*QI+W*QR)/2   –       –      PI   QR5   1
          NEG              ;ACCU  =(PI–W*QI–W*QR)/2    –       –      PI   QR5   1
          SACH   *0+,0,AR2 ;PI’   =(PI–W*QI–W*QR)/2    –       –      PR5  QR5   2
          $ENDM
*******************************************************************************
*                                                                             *
*      MACRO  ’stage3’     number of words: 54                                *
*                                                                             *
*******************************************************************************
stage3    $macro num
          SPLK   #:num:–1,BRCR    ;execute ’num’–1 times ’stage3’
          LT     cos45
          RPTB   stage3e
          ZEROI
          PBY4J
          PBY2I
          P3BY4j
stage3e:  .set   $–1
          $ENDM
*******************************************************************************
*                                                                             *
*      MACRO: ’BUTTFLYI’       general butterfly radix 2 for 320C5x           *
*                                                                             *
*   THE MACRO ’BUTTFLYI’ REQUIRES 18 WORDS                                    *
*                                                                             *
*   Definition: ARP –> AR2     (input)   ARP –> AR2      (output)             *
*                                                                             *
*   Definition: AR1 –> QR      (input)   AR1 –> QR+1     (output)             *
*   Definition: AR2 –> PR      (input)   AR2 –> PR+1     (output)             *
*   Definition: AR3 –> Cxxx    (input)   AR3 –> Cxxx+1   (output)  –––> WR=cosine *
*   Definition: AR4 –> Sxxx    (input)   AR4 –> Sxxx+1   (output)  –––> WI=sine   *
*   Definition: AR5 –> temporary variable (unchanged)                         *
*                                                                             *
*   uses index register                                                       *
*                                                                             *
*      PR’ = (PR+(QR*WR+QI*WI))/2       WR=COS(W) WI=SIN(W)                   *
*      PI’ = (PI+(QI*WR–QR*WI))/2                                             *
*      QR’ = (PR–(QR*WR+QI*WI))/2                                             *
*      QI’ = (PI–(QI*WR–QR*WI))/2                                             *
*                                                                             *
*******************************************************************************
```

Example 2–34. Macros for 16-Point DIT FFT (Continued)

```
BUTTFLYI  $MACRO
*                                                  (contents of register after exec.)
*                                                           TREG AR1  AR2 AR3 AR4 ARP
          RPTB   btflyend  ;                                ---- ---  --- --- --- ---
          LT     *+,AR3    ;TREG  :=QR                      QR PR   QI   C   S   3
          MPY    *,AR2     ;PREG  :=QR*WR/2                 QR PR   QI   C   S   2
          LTP    *–,AR4    ;ACC   :=QR*WR/2                 QI PR   QR   C   S   4
          MPY    *,AR3     ;PREG  :=QI*WI/2                 QI PR   QR   C   S   3
          MPYA   *+,AR2    ;ACC   :=(QR*WR+QI*WI)/2         QR PR   QR   C+1 S   2
                           ;PREG  :=QI*WR
          LT     *,AR5     ;TREG   =QR                      QR PR   QR   C+1 S   5
          SACH   *,1,AR1   ;H0    :=(QR*WR+QI*WI)           QR PR   QR   C+1 S   1
*
          ADD    *,15      ;ACC   :=(PR+(QR*WR+QI*WI))/2    QR PR   QR   C+1 S   1
          SACH   *+,0,AR5  ;PR    :=(PR+(QR*WR+QI*WI))/2    QR PI   QR   C+1 S   5
          SUB    *,16,AR2  ;ACC   :=(PR–(QR*WR+QI*WI))/2    QR PI   QR   C+1 S   2
          SACH   *+,0,AR1  ;QR    :=(PR–(QR*WR+QI*WI))/2    QR PI   QI   C+1 S   1
*
          LACC   *,15,AR4  ;ACC   :=PI/PREG=QI*WR           QI PI   QI   C+1 S   4
          MPYS   *+,AR2    ;PREG  :=QR*WI/2                 QI PI   QI   C+1 S+1 2
                           ;ACC   :=(PI–QI*WR)/2
          APAC             ;ACC   :=(PI–(QI*WR–QR*WI))/2    QI PI   QI   C+1 S+1 2
          SACH   *+,0,AR1  ;QI    :=(PI–(QI*WR–QR*WI))/2    QI PI   QR+1 C+1 S+1 1
          NEG              ;ACC   :=(–PI+(QI*WR–QR*WI))/2   QI PI   QR+1 C+1 S+1 1
          ADD    *,16      ;ACC   :=(PI+(QI*WR–QR*WI))/2    QI PI   QR+1 C+1 S+1 1
btflyend:
          SACH   *+,0,AR2  ;PI    :=(PI+(QI*WR–QR*WI))/2    QI PR+1 QR+1 C+1 S+1 2
          $ENDM
; end of file
```

Example 2–35. Initialization Routine

```
*            file:  INIT–FFT.ASM
*
*            Initialized  variables
*
             .bss   NN,1          ;Number of fft–points
             .bss   NN2,1         ;2*N–1
             .bss   DATAADD,1     ;Start address of data
             .bss   cos45,1
             .bss   sin4,1        ;Start of sine in stage    4
             .bss   cos4,1        ;Start of cosine in stage  4
*            Temp variables
*
             .bss   TEMP,2        ;Used for temporary numbers
*
             .sect  ”vectors”
             B      INIT,*,AR0
             .sect  ”init”
TABINIT:     .word  N,N–1,2*N–1,DATA
             .word  5A82h         ;cos(45)=sin(45)
             .word  TWID,TWID+4
TABEND:      .set   $
*
INIT:        LDP    #0            ;Use only B2 and mmregs for direct addressing
             SPM    0             ;No shift from PREG to ALU
             CLRC   OVM           ;Disable overflowmode
             SETC   SXM           ;Enable sign extension mode
             SPLK   #pmstmask,PMST  ;ndx=trm=1
*
* INIT Block B2
*
             LAR    AR0,#NN       ;ARP is already pointing to AR0
             LACC   #TABINIT
             RPT    #TABEND–TABINIT
             TBLR   *+
*
* INIT TWIDDLE FACTORS
*
             LAR    AR0,#TWID     ;ARP is already pointing to AR0
             LACC   #TWIDSTRT
             RPT    #TWIDLEN
             TBLR   *+
*
* EXECUTE THE FFT
*
             LAR    AR5,#TEMP     ;Pointer to 2 temp register
             CALL   FFT,*,AR3     ;ARP=AR3 FOR MACRO COMBO
*
WAIT         RET                  ;Return
```

Chapter 3

External Memory Interface

This chapter provides a general description of the external interface to memory. Also included is a description of the direct memory access (DMA) in a portable computer configuration.

Topic **Page**

3.1	External Interface to Program Memory	3-2
3.2	External Interface to Local Data Memory	3-4
3.3	External Interface to Global Data Memory	3-6
3.4	External Interface to I/O Space	3-6
3.5	Direct Memory Access (DMA) in a Personal Computer Configuration	3-7

3.1 External Interface to Program Memory

The ’C5x devices can address up to 64K words of program memory off-chip. The following key signals interface to off-chip memory:

A0–A15	16-bit bidirectional address bus
D0–D15	16-bit bidirectional data bus
$\overline{\text{PS}}$	Program memory select
$\overline{\text{STRB}}$	External memory access active strobe
$\overline{\text{RD}}$	Read select (external device output enable)
$\overline{\text{WE}}$	Write enable
$\overline{\text{IACK}}$	Interrupt acknowledge
READY	Memory ready to complete cycle
$\overline{\text{HOLD}}$	Request for control of memory interface
$\overline{\text{HOLDA}}$	Acknowledge $\overline{\text{HOLD}}$ request
$\overline{\text{BR}}$	Bus request
$\overline{\text{IAQ}}$	Acknowledge bus request (when $\overline{\text{HOLDA}}$ is low)

In the example of an external EPROM interface shown in Figure 3–1, the ’C5x device interfaces to an external 8K-byte $\times$ 8-bit EPROM. The use of 8-bit-wide memories saves power, board space, and cost over 16-bit-wide memory banks. The 16-bit-wide memory banks can be used with the same basic interface as the 8-bit-wide memories. Note that the ’C5x cannot directly execute code from 8-bit-wide memory. An on-chip program (such as a boot-loader program) is required to read 8-bit-wide memory to form 16-bit long instruction words and transfer them to on-chip RAM.

The program select ($\overline{\text{PS}}$) signal is connected directly to the chip select ($\overline{\text{CS}}$) pin to select the EPROM on any external program access. The EPROM is addressed in any 8K-word address block in program space. If you want to interface multiple blocks of memory in program space, you can use a decode circuit that gates the $\overline{\text{PS}}$ signal and the appropriate address bits to drive the memory block chip selects.

The read select ($\overline{\text{RD}}$) signal is connected directly to the output enable ($\overline{\text{OE}}$) pin of the EPROM. The $\overline{\text{OE}}$ signal enables the output drivers of the EPROM. The drivers are turned off in time to prevent data bus conflicts with an external write by the ’C5x device.

Figure 3–1. ’C5x Interfacing to External EPROM

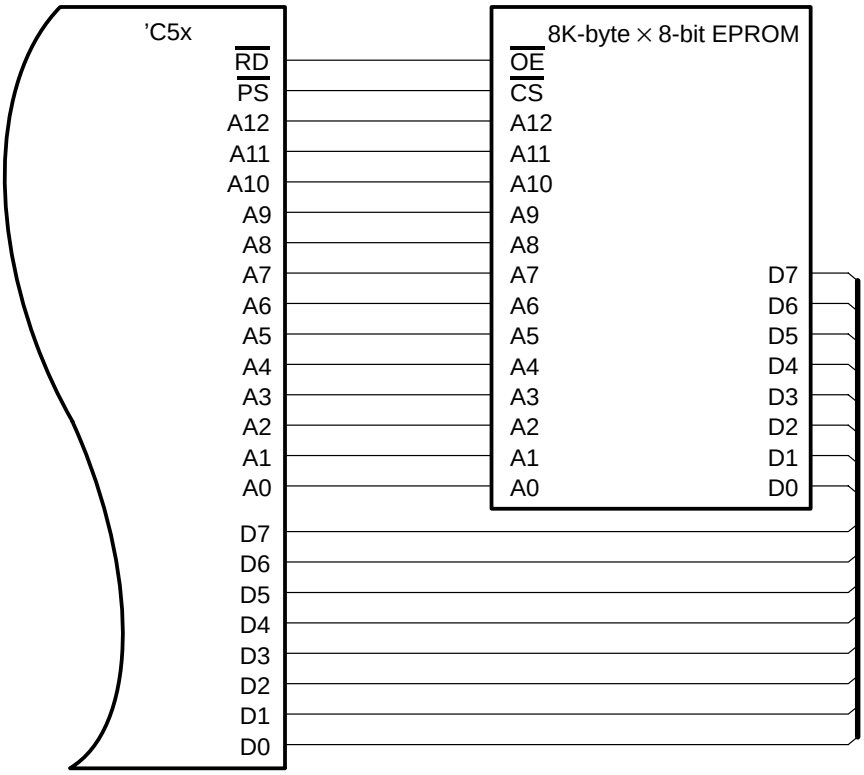

3.2 External Interface to Local Data Memory

The ’C5x devices can address up to 64K words of local data memory off-chip. The following key signals interface to off-chip memory:

A0–A15	16-bit bidirectional address bus
D0–D15	16-bit bidirectional data bus
$\overline{\text{DS}}$	Data memory select
$\overline{\text{STRB}}$	External memory access active strobe
$\overline{\text{RD}}$	Read select (external device output enable)
$\overline{\text{WE}}$	Write enable
READY	Memory ready to complete cycle
$\overline{\text{HOLD}}$	Request for control of memory interface
$\overline{\text{HOLDA}}$	Acknowledge $\overline{\text{HOLD}}$ request
$\overline{\text{BR}}$	Bus request
$\overline{\text{IAQ}}$	Acknowledge bus request (when $\overline{\text{HOLDA}}$ is low)

In the example of an external RAM interface shown in Figure 3–2, the ’C5x device interfaces to four 16K-byte $\times$ 4-bit RAM devices. The data memory select ($\overline{\text{DS}}$) signal is connected directly to the chip select ($\overline{\text{CS}}$) of the devices. This allows the external RAM block to be addressed in any of the four 16K-byte banks of local data space. If there are additional banks of off-chip data memory, you can use a decode circuit that gates the $\overline{\text{DS}}$ signal with the appropriate address bits to drive the memory block chip select.

The $\overline{\text{RD}}$ signal is connected directly to the output enable ($\overline{\text{OE}}$) pin of the RAMs. The $\overline{\text{OE}}$ signal enables the output drivers of the RAM. The drivers are turned off in time to prevent data bus conflicts with an external write by the ’C5x device. If the RAM device does not have an $\overline{\text{OE}}$ pin, then the $\overline{\text{DS}}$ signal must be gated with $\overline{\text{STRB}}$ and connected to the $\overline{\text{CS}}$ pin of the RAM to implement the same function.

The $\overline{\text{WE}}$ signal is connected directly to the $\overline{\text{WE}}$ pin of the RAMs. The ’C5x device requires at least two cycles on all external writes, including a half cycle before $\overline{\text{WE}}$ goes low and a half cycle after $\overline{\text{WE}}$ goes high; this prevents buffer conflicts on the external buses. Additional write cycles can be obtained by modifying the software wait-state generator registers.

Figure 3–2. ’C5x Interfacing to External RAM

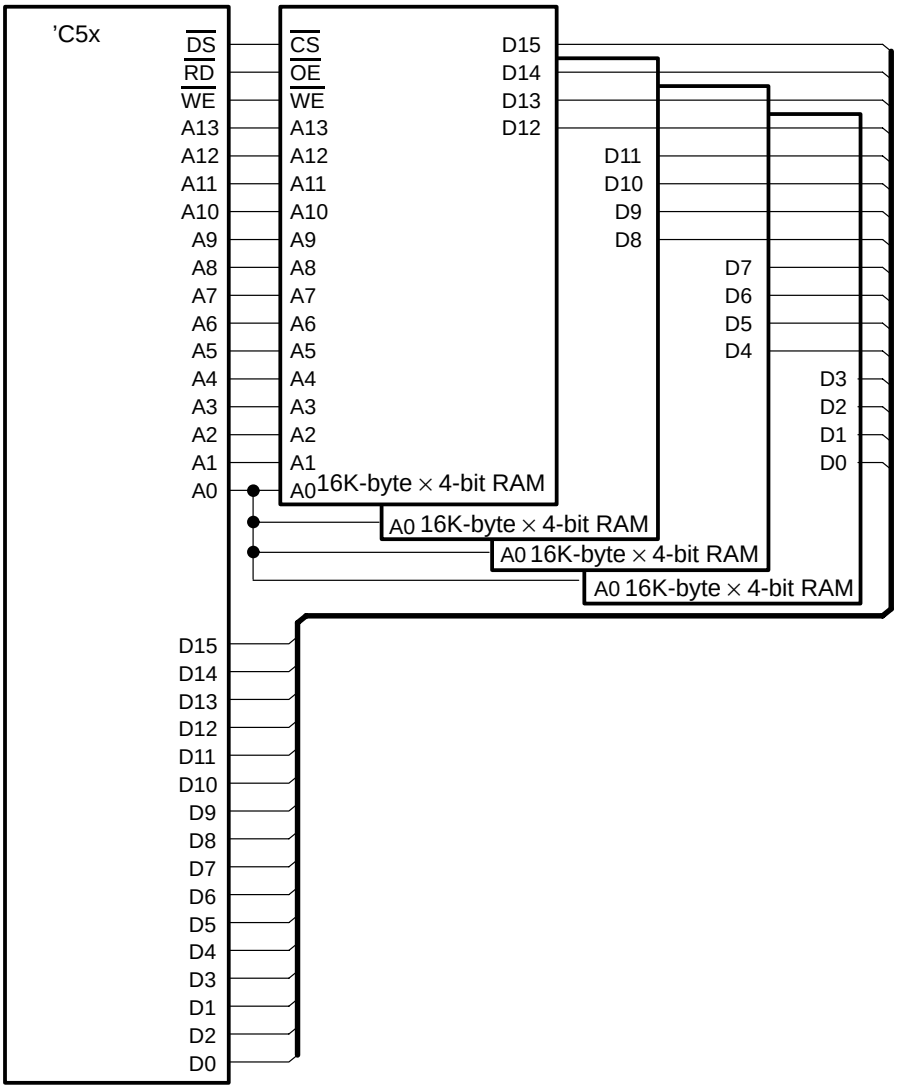

3.3 External Interface to Global Data Memory

Global memory can be used in digital signal processing tasks, such as filters or modems, in which the algorithm being implemented is divided into sections with a distinct processor dedicated to each section. With multiple processors dedicated to distinct sections of the algorithm, throughput may be increased via pipelined execution. Figure 3–3 illustrates an example of a global memory interface. Since the processors can be synchronized by using the $\overline{BR}$ pin, the arbitration logic can be simplified and the address and data bus transfers made more efficient.

The global memory interface can also extend the data memory address map beyond the reach of the 16-bit address bus by paging in an additional 32K words. Loading the GREG with the appropriate value can overlay the local data memory with additional memory, starting at the highest memory address (FFFFh) and moving down. This additional memory is differentiated from local memory accesses by the $\overline{BR}$ pin going low. The rest of the memory interface control signals ($\overline{STRB}$, $\overline{DS}$, etc.) behave identically on a local or global data access.

Figure 3–3. Global Memory Interface

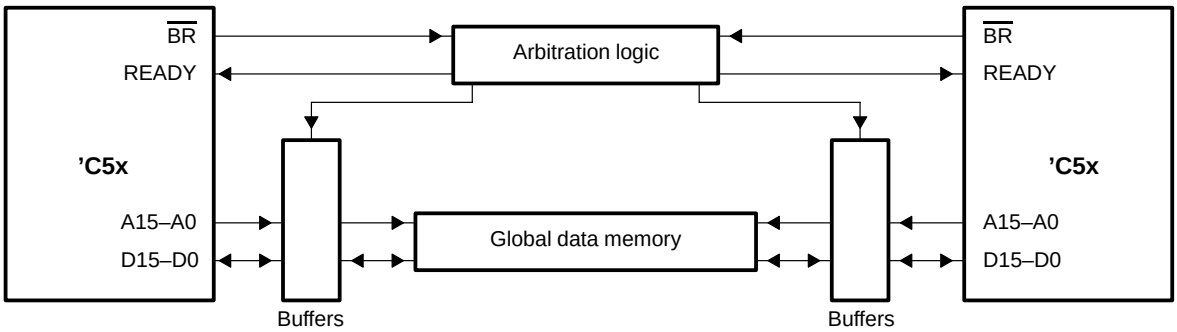

3.4 External Interface to I/O Space

The $\overline{RD}$ and $\overline{WE}$ signals can be used along with chip-select logic to output data to an external device. The port address can be decoded and used as a chip select for the input or output device.

3.5 Direct Memory Access (DMA) in a Personal Computer Configuration

You can implement DMA in a personal computer (PC) environment by using the PC system bus for data transfer to external ’C5x memory. Figure 3–4 illustrates a DMA access in a PC environment. In this configuration, either the master CPU or a disk controller places data onto the PC system bus, which can be downloaded into the local memory of the ’C5x. In this configuration, the ’C5x functions like a peripheral processor with multifunction capability. In a speech application, for example, the master CPU can load the ’C5x program memory with algorithms to perform such tasks as speech analysis, synthesis, or recognition, and can fill the ’C5x data memory with the required speech templates. In another application, the ’C5x can serve as a dedicated graphics engine. Programs can be downloaded via the PC system bus into program RAM. Data can come from PC disk storage or can be provided directly by the master CPU.

In Figure 3–4, decode/arbitration logic control the DMA. When the address on the PC system bus resides in the local memory of the peripheral ’C5x, the logic control asserts the $\overline{\text{HOLD}}$ signal of the ’C5x while sending the master CPU a not-ready indication to allow wait states. After the ’C5x acknowledges the direct memory access by asserting $\overline{\text{HOLDA}}$, READY is asserted and the information is transferred.

Figure 3–4. Direct Memory Access in a PC Environment

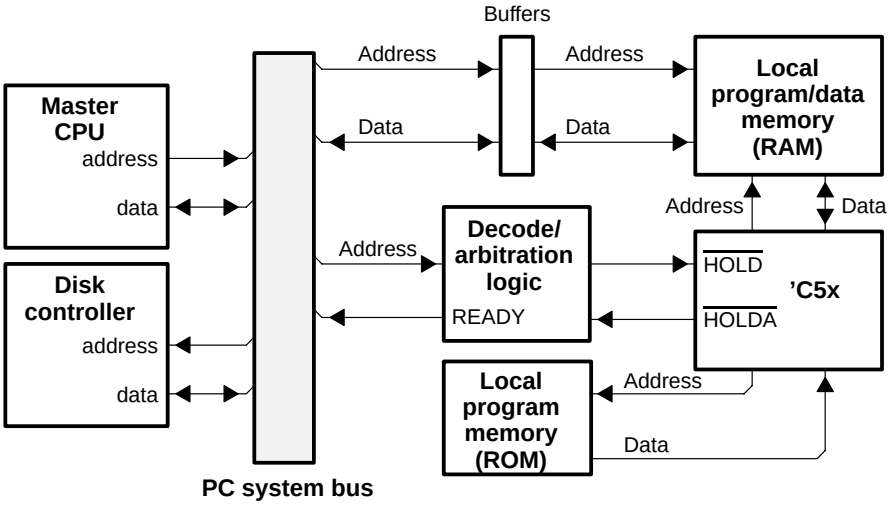

Chapter 4

Analog Interface Peripherals and Applications

Texas Instruments offers many products for total system solutions, including memory options, data acquisition, and analog input/output devices. This chapter describes a variety of devices that interface directly to the TMS320 DSPs in rapidly expanding applications.

Topic **Page**

4.1	Multimedia Applications	4-2
4.2	Telecommunications Applications	4-5
4.3	Dedicated Speech Synthesis Applications	4-10
4.4	Servo Control/Disk Drive Applications	4-12
4.5	Modem Applications	4-15
4.6	Advanced Digital Electronics Applications for Consumers	4-18

4.1 Multimedia Applications

Multimedia applications integrate different media through a centralized computer. These media can be visual or audio and can be input to or output from the central computer via a number of technologies. The technologies can be digital or analog based (such as audio or video tape recorders). The integration and interaction of media enhances the transfer of information and can accommodate both analysis of problems and synthesis of solutions.

Figure 4–1 shows both the central role of the multimedia computer and its ability to integrate the various media to optimize information flow and processing.

4.1.1 System Design Considerations

Multimedia systems can include various grades of audio and video quality. The most popular video standard currently used (VGA) covers 640 × 480 pixels with 1, 2, 4, and 8-bit memory-mapped color. Also, 24-bit true color is supported, and 1024 × 768 (beyond VGA) resolution has emerged. There are two grades of audio. The lower grade accommodates 11.25-kHz sampling for 8-bit monaural systems, while the higher grade accommodates 44.1-kHz sampling for 16-bit stereo.

Audio specifications include a musical instrument digital interface (MIDI) with compression capability, which is based on keystroke encoding, and an input/output port with a 3-disc voice synthesizer. In the media control area, video disc, CD audio, and CD ROM player interfaces are included. Figure 4–2 shows a multimedia subsystem.

Figure 4–1. System Block Diagram

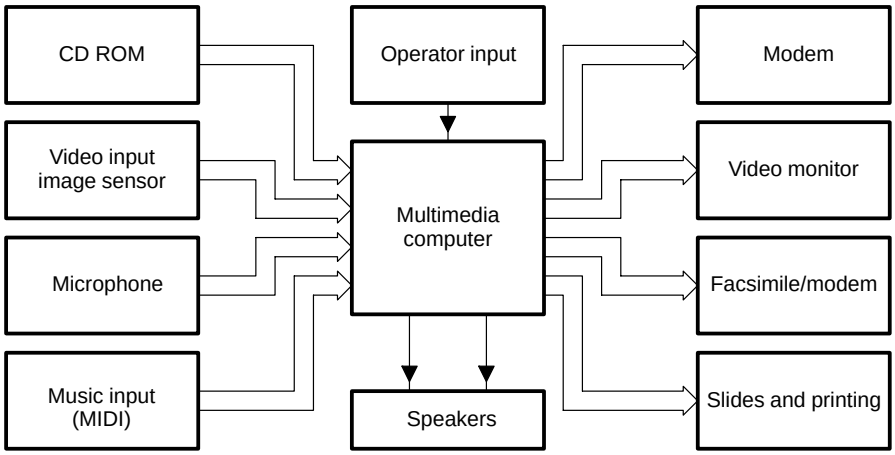

The TLC32047 wide-band analog interface circuit (AIC) is well suited for multimedia applications because it features wide-band audio and up to 25-kHz sampling rates. The TLC32047 is a complete analog-to-digital and digital-to-analog interface system for the TMS320 DSPs. The nominal bandwidths of the filters accommodate 11.4 kHz, and this bandwidth is programmable. The application circuit shown in Figure 4–2 handles both speech encoding and modem communication functions, which are associated with multimedia applications.

Figure 4–3 shows how the ’C25 DSP interfaces to the TLC32047 AIC — comprising the building blocks of the 9600-bps V.32bis modem shown in Figure 4–2.

Figure 4–2. Multimedia Speech Encoding and Modem Communication

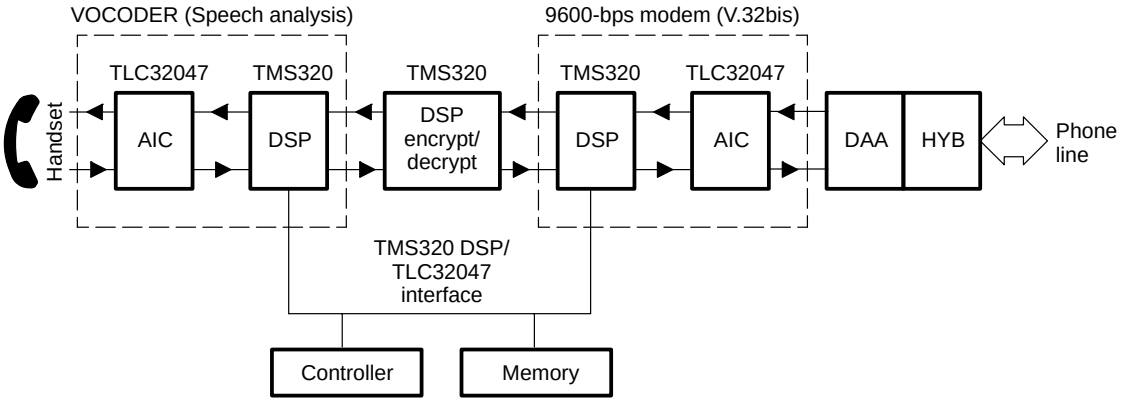

Figure 4–3. TMS320C25 to TLC32047 Interface

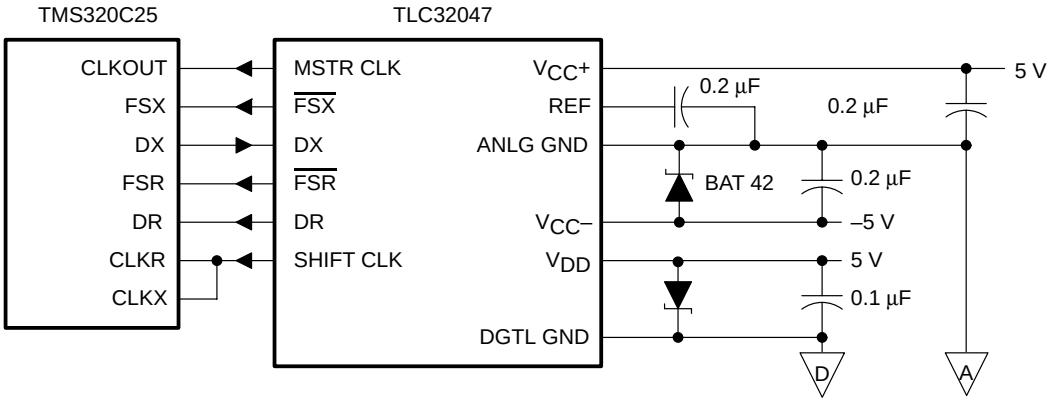

4.1.2 Multimedia-Related Devices

As listed in Table 4–1 and Table 4–2, TI provides a complete array of analog and graphics interface devices. These devices support the TMS320 DSPs for complete multimedia solutions. For application assistance or additional information, call the Semiconductor Product Information Center (PIC) as listed in *If You Need Assistance* on page xvii.

Table 4–1. Data Converter ICs

Device	Description	I/O	Resolution (Bits)	Conversion CLK Rate	Application
TLC320AC01	Analog interface (5 V only)	Serial	14	43.2 kHz	Portable modem and speech, multimedia
TLC32040	Analog interface (AIC)	Serial	14	19.2 kHz	Speech and modems
TLC32044	Analog interface (AIC)	Serial	14	19.2 kHz	Speech and modems
TLC32046	Analog interface (AIC)	Serial	14	25 kHz	Speech and modems
TLC32047	Analog interface (11.4-kHz BW) (AIC)	Serial	14	25 kHz	Speech, modem, and multimedia
TLC32071	Analog interface (AIC)	Parallel	8	1 MHz	Servo control/disk drive
TLC34058	Video palette	Parallel	Triple 8	135 MHz	Graphics
TLC34075/6	Video palette	Parallel	Triple 8	135 MHz	Graphics
TLC5501	Flash ADC	Parallel	6	20 MHz	Video
TLC5502/3	Flash ADC	Parallel	8	20 MHz	Video
TLC5601	Video DAC	Parallel	6	20 MHz	Video
TLC5602	Video DAC	Parallel	8	20 MHz	Video
TLC1550/1	ADC	Parallel	10	150 kHz	Servo control/speech
TMS57013/4	Dual audio DAC + digital filter	Serial	16/18	32, 37.8, 44.1, 48 kHz	Digital audio

Table 4–2. Switched-Capacitor Filter ICs

Device	Function	Order	Roll-Off	Power Out	Power Down
TLC2470	Differential audio filter amplifier	4	5 kHz	500 mW	Yes
TLC2471	Differential audio filter amplifier	4	3.5 kHz	500 mW	Yes
TLC10/20	General-purpose dual filter	2	CLK ÷ 50 CLK ÷ 100	N/A	No
TLC04/14	Low pass, Butterworth filter	4	CLK ÷ 50 CLK ÷ 100	N/A	No

4.2 Telecommunications Applications

The TI linear product line focuses on three primary telecommunications application areas: subscriber instruments (telephones, modems, etc.), central office line card products, and personal communications. Subscriber instruments include the TCM508x dual-tone multiple frequency (DTMF) encoder family, the TCM150x tone ringer family, the TCM1520 ring detector, and the TCM3105 frequency shift keying (FSK) modem. Central office line card products include the TCM29Cxx combo (combined PCM filter plus codec) family, the TCM420x subscriber-line control circuit family, and the TCM1030/60 line card transient protector. Personal communication (PCN) and cellular products include the TCM320AC3x family of 5-V voice-band audio processors (VBAP).

TI continues to develop new telecom integrated circuits, such as a high-performance 3-volt combo family for personal communications applications, and a radio frequency (RF) power amplifier family for hand-held and mobile cellular phones.

Figure 4–4 shows a block diagram of a generic telecom application using a DSP with analog-to-digital converters (ADCs) and digital-to-analog converters (DACs). Figure 4–5 illustrates a general telecom application.

Figure 4–4. Generic Telecom Application

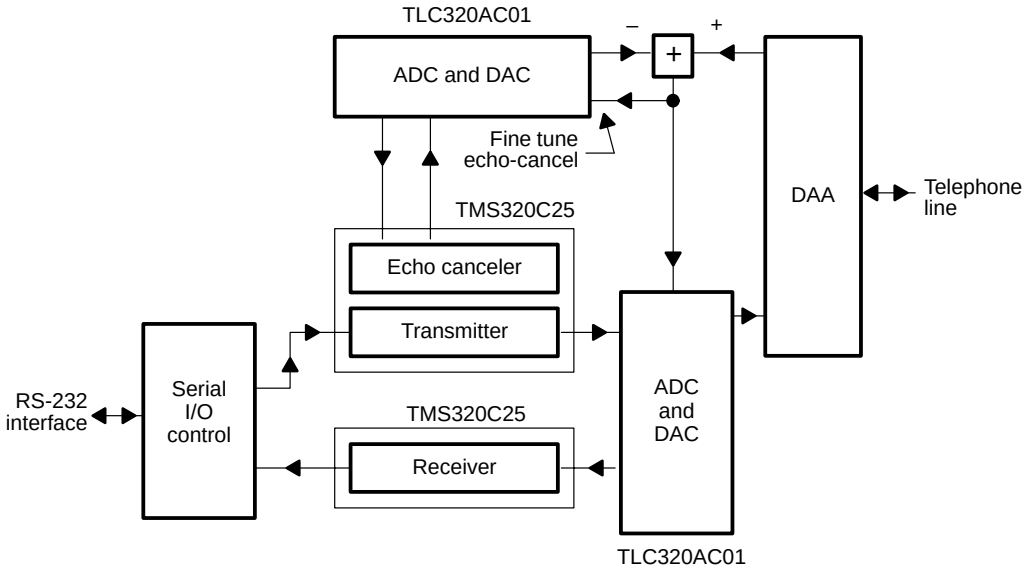

Figure 4–5. General Telecom Applications

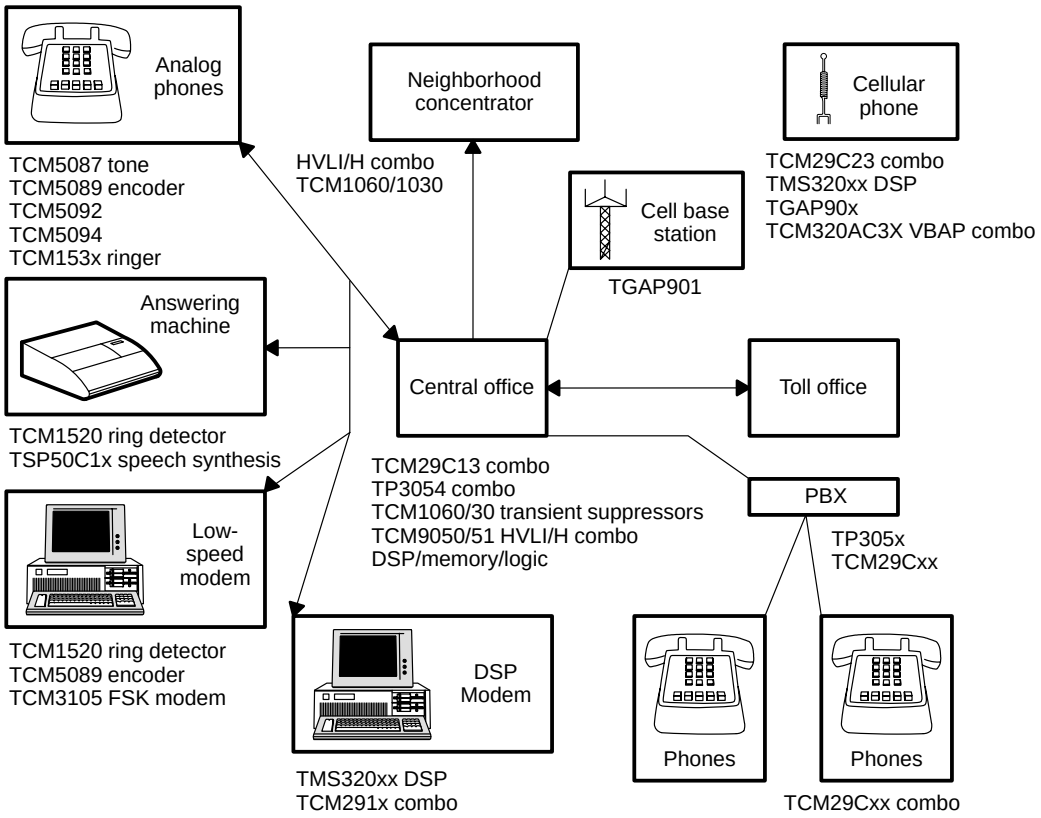

4.2.1 System Design Considerations

The size, network complexity, and compatibility requirements of telecommunications central office systems create demanding performance requirements. Combo voice-band filter performance is typically ± 0.15 dB in the passband. Idle channel noise must be on the order of 15 dBrnc0. Gain tracking (S/Q) and distortion must also meet stringent requirements. The key parameters for a subscriber line interface circuit (SLIC) device are gain, longitudinal balance, and return loss.

The TCM320AC36 combo interfaces directly to the ’C25 serial port with a minimum of external components, as shown in Figure 4–6. Half of hex inverter U3 and crystal Y1 form an oscillator that provides clock timing to the TCM320AC36. The synchronous 4-bit counters U1 and U2 generate an 8-kHz frame sync signal. DCLKR on the TCM320AC36 is connected to V_{DD}, placing the combo in fixed data-rate mode. Two 20-kΩ resistors connected to ANLGIN and MIC_GS set the gain of the analog input amplifier to 1. The timing is shown in Figure 4–7.

Figure 4–6. Typical DSP/Combo Interface

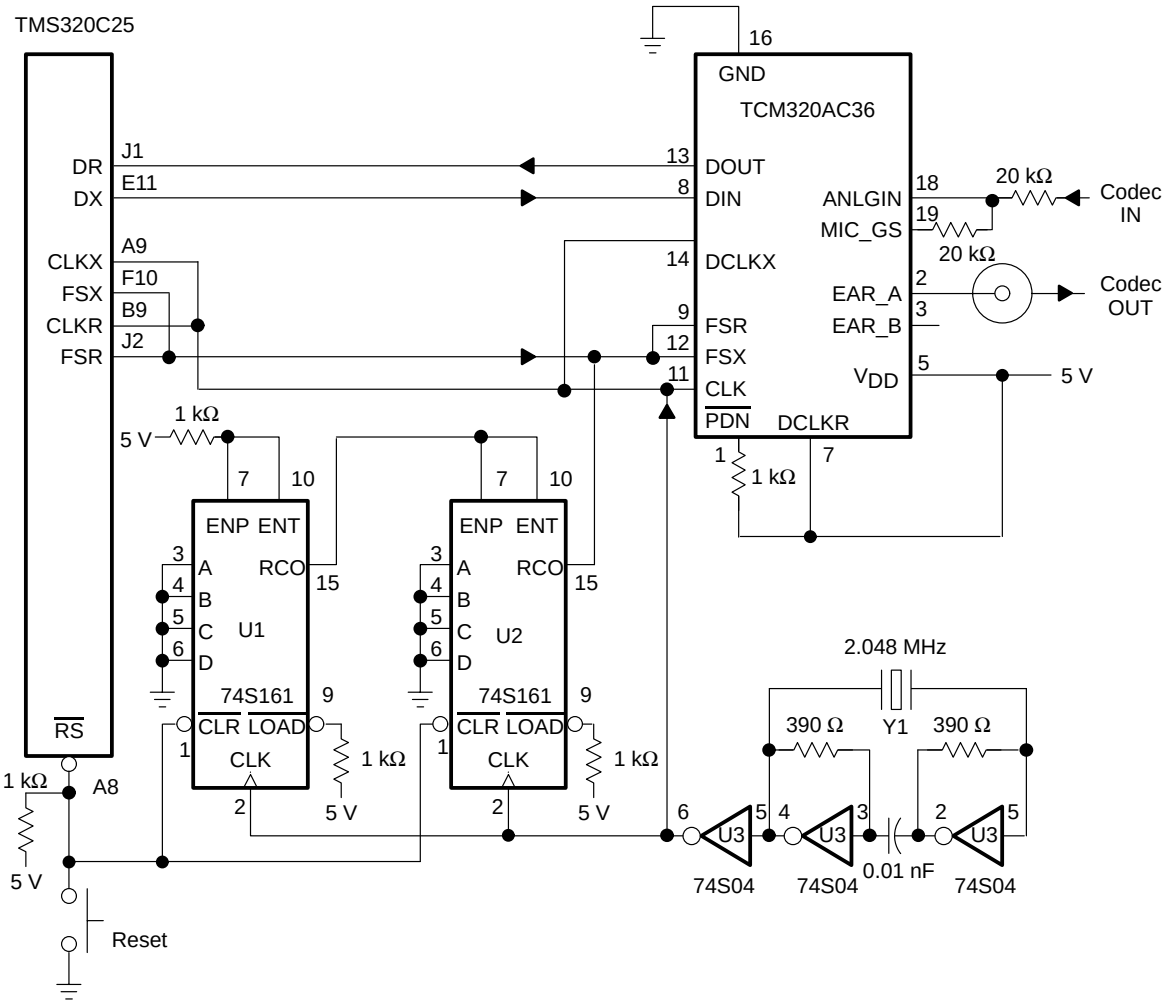

Figure 4–7. DSP/Combo Interface Timing

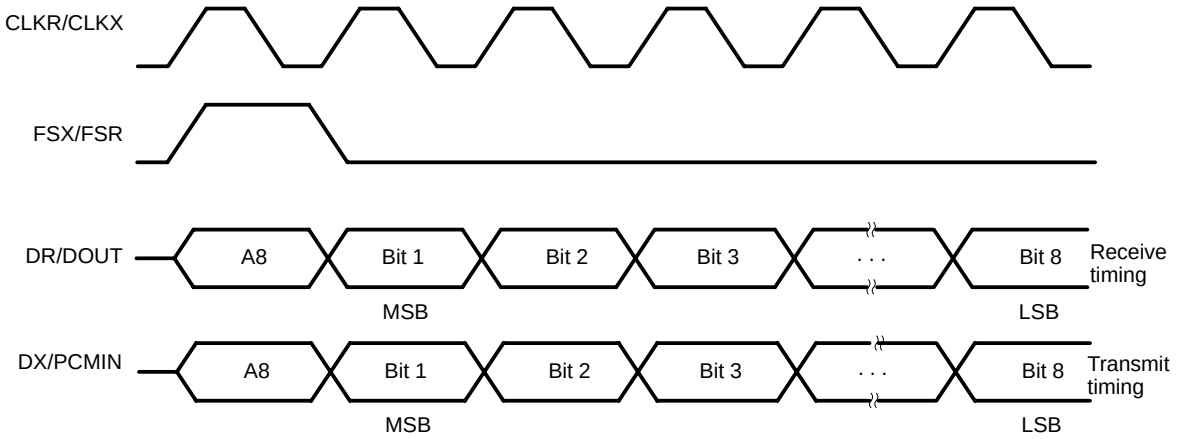

4.2.2 Telecommunications-Related Devices

As listed in Table 4–2, Table 4–3, and Table 4–4, TI provides a complete array of devices. These devices support the TMS320 DSPs for complete telecommunications solutions. Data sheets for the telecom devices listed in Table 4–3 and Table 4–4 are available. To request your copy, for application assistance, or additional information, call the Semiconductor Product Information Center (PIC) as listed in *If You Need Assistance* on page xvii.

Table 4–3. Telecom Devices—Codec/Filter ICs

Device Number	Coding Law	Clock Rates (MHz)†	# of Bits	Comments
TCM29C13	A and μ	1.544, 1.536, 2.048	8	C.O. and PBX line cards
TCM29C14	A and μ	1.544, 1.536, 2.048	8	Includes 8th-bit signal
TCM29C16	μ	2.048	8	16-pin package
TCM29C17	A	2.048	8	16-pin package
TCM29C18	μ	2.048	8	Low-cost DSP interface
TCM29C19	μ	1.536	8	Low-cost DSP interface
TCM29C23	A and μ	Up to 4.096	8	Extended frequency range
TCM29C26	A and μ	Up to 4.096	8	Low-power TCM29C23
TCM320AC36	μ and linear	Up to 4.096	8 and 13	Single voltage (5) VBAP
TCM320AC37	A and linear	Up to 4.096	8 and 13	Single voltage (5) VBAP
TCM320AC38	μ and linear	Up to 4.096	8 and 13	Single voltage (5) GSM
TCM320AC39	A and linear	Up to 4.096	8 and 13	Single voltage (5) GSM
TP3054/64	μ	1.544, 1.536, 2.048	8	National Semiconductor second source
TP3054/67	A	1.544, 1.536, 2.048	8	National Semiconductor second source
TLC320AC01	Linear	43.2 kHz	14	5-V-only analog interface
TLC32040/1	Linear	Up to 19.2-kHz sampling	14	For high-dynamic linearity
TLC32044/5	Linear	Up to 19.2-kHz sampling	14	For high-dynamic linearity
TLC32046	Linear	Up to 25-kHz sampling	14	For high-dynamic linearity
TLC32047	Linear	Up to 25-kHz sampling	14	For high-dynamic linearity

† Clock rate in MHz, unless otherwise noted

Table 4–4. Telecom Devices—Transient Suppressor ICs

Device	Function	Comments
TCM1030	Transient suppressor for SLIC-based line card	(30 A max)
TCM1060	Transient suppressor for SLIC-based line card	(60 A max)

4.3 Dedicated Speech Synthesis Applications

For dedicated speech synthesis applications, TI offers a family of dedicated speech synthesizer chips. This speech technology has been used in a wide range of products including games, toys, burglar alarms, fire alarms, automobiles, airplanes, answering machines, voice mail, industrial control machines, office machines, advertisements, novelty items, exercise machines, and learning aids.

4.3.1 System Design Considerations

Dedicated speech synthesis chips are effective in low-cost applications. The speech synthesis technology provided by the dedicated chips is either LPC (linear-predictive coding) or CVSD (continuously variable slope delta modulation). Table 4–5 shows the characteristics of the TI voice synthesizers.

Table 4–5. Voice Synthesizers

Device	Microprocessor	Synthesis Method	I/O Pins	On-Chip Memory (Bits)	External Memory	Data Rate (Bits/Sec)
TSP50C4x	8-bit	LPC–10	20/32	64K/128K	VROM	1200–2400
TSP50C1x	8-bit	LPC–12	10	64K/128K	VROM	1200–2400
TSP53C30	8-bit	LPC–10	20	N/A	From host microprocessor	1200–2400
TSP50C20	8-bit	LPC–10	32	N/A	EPROM	1200–2400
TMS3477	N/A	CVSD	2	None	DRAM	16K–32K

4.3.2 Speech Synthesis-Related Devices

TI has low-cost memories that are ideal for use with speech synthesizers chips. TI can also be of assistance in developing and processing the speech data that is used in these speech synthesis systems. Table 4–6 lists the TSP60Cxx family of speech memory devices. Additionally, audio filters are listed in Table 4–2 on page 4-4.

Table 4–6. Speech Memories

Device	Size	No. of Pins	Interface	For use with
TSP60C18	256K	16	Parallel 4-bit	TSP50C1x
TSP60C19	256K	16	Serial	TSP50C4x
TSP60C20	256K	28	Parallel/serial 8-bit	TSP50C4x
TSP60C80	1M	28	Serial	TSP50C4x
TSP60C81	1M	28	Parallel 4-bit	TSP50C1x

Speech Synthesis Development Tools

Software:
EVM Code development tool

Speech:
SAB Speech audition board
SD85000 PC-based speech analysis system

System:
SEB System emulator board
SEB60Cxx System emulator boards for speech memories

For further information on these speech synthesis products, call the Semiconductor Product Information Center (PIC) as listed in *If You Need Assistance* on page xvii.

4.4 Servo Control/Disk Drive Applications

Several years ago, most servo control systems used only analog circuitry. However, the growth of digital signal processing has made digital control theory a reality.

In a DSP-based control system, the control algorithm is implemented via software. No component aging or temperature drift is associated with digital control systems. Additionally, sophisticated algorithms can be implemented and easily modified to upgrade system performance.

Figure 4–8 shows a block diagram of a generic digital control system using a DSP, along with an ADC and DAC.

Figure 4–8. Generic Servo Control Loop

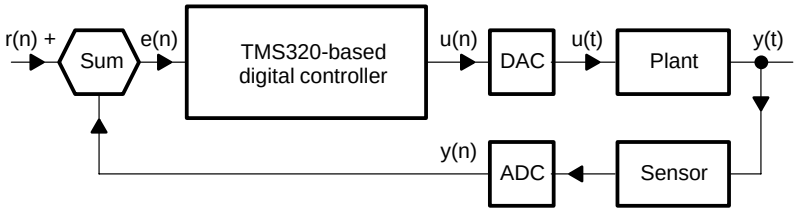

4.4.1 System Design Considerations

TMS320 DSPs have facilitated the development of high-speed digital servo control for disk drive and industrial control applications. Disk drives have increased storage capacity from 5 MB to over 1 GB in the past decade, which equates to a 23 900 percent growth in capacity. To accommodate these increasingly higher densities, the data on the servo platters, whether servo-positioning or actual storage information, must be converted to digital electronic signals at increasingly closer points in relation to the platter “pick-off” point. The ADC must have increasingly higher conversion rates and greater resolution to accommodate the increasing bandwidth requirements of higher storage densities. In addition, the ADC conversion rates must increase to accommodate the shorter data retrieval access time.

Figure 4–9 shows a block diagram of a disk drive control system. Figure 4–10 shows the interfacing of the ’C14 and the TLC32071.

Figure 4–9. Disk Drive Control System Block Diagram

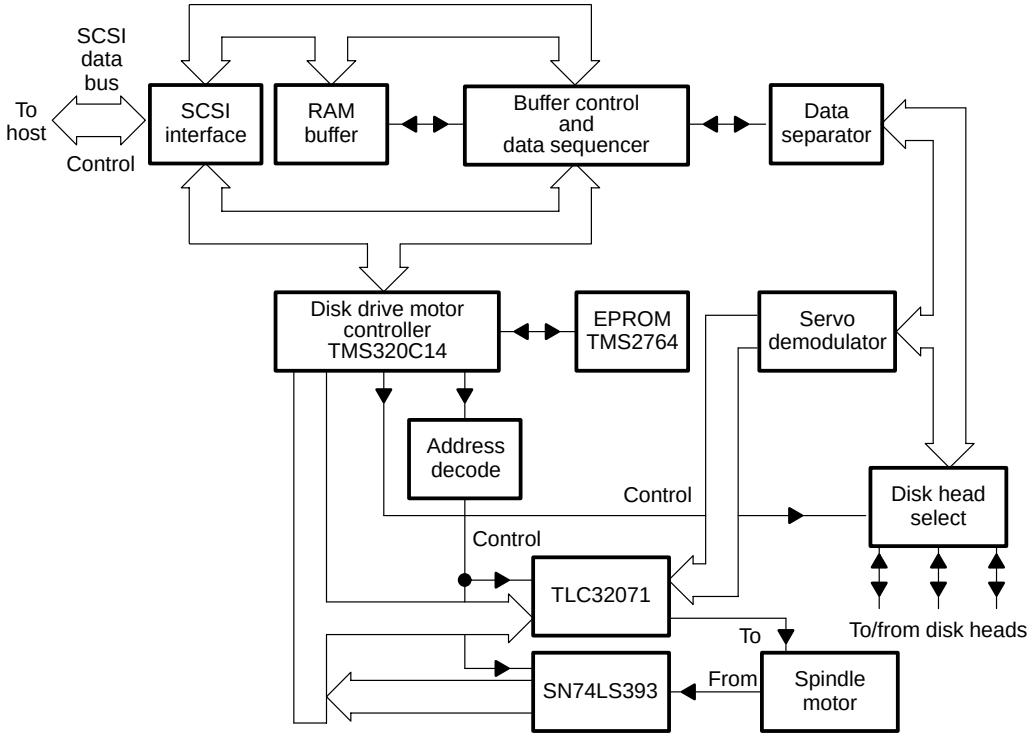

Figure 4–10. TMS320C14 to TLC32071 Interface

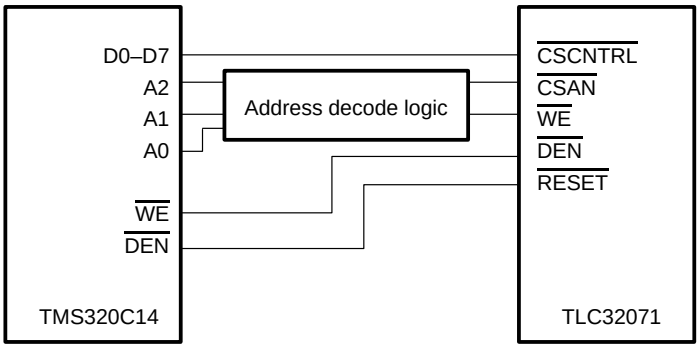

4.4.2 Servo Control/Disk Drive-Related Devices

As listed in Table 4–7, TI provides a complete array of analog and digital interface devices. These devices support the TMS320 DSPs for servo control applications. For application assistance or additional information, call the Semiconductor Product Information Center (PIC) as listed in *If You Need Assistance* on page xvii.

Table 4–7. Control Related Devices

Function	Device	Bits	Speed	Channels	Interface
ADC	TLC1550	10	3–5 µs	1	Parallel
	TLC1551	10	3–5 µs	1	Parallel
	TLC5502/3	8	50 ns (Flash)	1	Parallel
	TLC0820	8	1.5 µs	1	Parallel
	TLC1225	13	12 µs	1 (diff.)	Parallel
	TLC1558	10	3–5 µs	8	Parallel
	TLC1543	10	21 µs	11	Serial
	TLC1549	10	21 µs	1	Serial
DAC	TLC7524	8	9 MHz	1	Parallel
	TLC7628	8	9 MHz	(dual)	Parallel
	TLC5602	8	30 MHz	1	Parallel
AIC	TLC32071	8 (ADC)	1 µs 9 MHz	8 1	Parallel

4.5 Modem Applications

High-speed modems (9600 bps and above) require a great deal of analog signal processing in addition to digital signal processing. Designing both high-speed capabilities and slower fall-back modes poses significant engineering challenges. TI offers a number of analog front-end (AFE) circuits to support various high-speed modem standards.

The TLC32040, TLC32044, TLC32046, TLC32047, and TLC320AC01 analog interface circuits (AIC) are especially suited for modem applications by the integration of an input multiplexer, switched capacitor filters, high resolution 14-bit ADC and DAC, a four-mode serial port, and control and timing logic. These converters feature adjustable parameters, such as filtering characteristics, sampling rates, gain selection, (sin x)/x correction (TLC32044, TLC32046, and TLC32047 only), and phase adjustment. All these parameters are software programmable, making the AIC suitable for a variety of applications. Table 4–8 provides the description and characteristics of these devices.

Table 4–8. Modem AFE Data Converters

Device	Description	I/O	Resolution (Bits)	Conversion Rate
TLC32040	Analog interface chip (AIC)	Serial	14	19.2 kHz
TLC32041	AIC without on-board V_{REF}	Serial	14	19.2 kHz
TLC32044	Telephone speed/modem AIC	Serial	14	19.2 kHz
TLC32045	Low-cost version of the TLC32044	Serial	14	19.2 kHz
TLC32046	Wide-band AIC	Serial	14	25 kHz
TLC32047	AIC with 11.4-kHz BW	Serial	14	25 kHz
TLC320AC01	5-volt-only AIC	Serial	14	43.2 kHz
TCM29C18	Companding codec/filter	PCM	8	8 kHz
TCM29C23	Companding codec/filter	PCM	8	16 kHz
TCM29C26	Low-power codec/filter	PCM	8	16 kHz
TCM320AC36	Single-supply codec/filter	PCM and linear	8	25 kHz

The AIC interfaces directly with serial-input TMS320 DSPs, which execute the modem's high-speed encoding and decoding algorithms. The TLC3204x family performs level shifting, filtering, and A/D and D/A data conversion. The DSP's many software-programmable features provide the flexibility required for modem operations and make it possible to modify and upgrade systems easily. Under DSP control, the AIC's sampling rates permit designers to include fall-back modes without additional analog hardware in most cases. Phase adjustments can be made in real time so that the A/D and D/A conversions can be synchronized with the upcoming signal. In addition, the chip has a built-in loopback feature to support modem self-test requirements.

Figure 4–11 shows a V.32bis modem implementation using the 'C25 and a TLC320AC01. The upper 'C25 performs echo cancellation and transmit data functions, while the lower 'C25 performs receive data and timing recovery functions. The echo canceler simulates the telephone channel and generates an estimated echo of the transmit data signal. The TLC320AC01 performs the following functions:

Upper TLC320AC01 D/A path: Converts the estimated echo, as computed by the upper 'C25, into an analog signal, which is subtracted from the receive signal

Upper TLC320AC01 A/D path: Converts the residual echo to a digital signal for purposes of monitoring the residual echo and continuously training the echo canceler for optimum performance. The converted signal is sent to the upper 'C25.

Lower TLC320AC01 D/A path: Converts the upper 'C25 transmit output to an analog signal, performs a smoothing filter function, and drives the DAC

Lower TLC320AC01 D/A path: Converts the echo-free receive signal to a digital signal, which is sent to the lower 'C25 to be decoded

For application assistance or additional information, call the Semiconductor Product Information Center (PIC) as listed in *If You Need Assistance* on page xvii.

Note:

The example in Figure 4–11 is for illustration only. In reality, one single 'C5x DSP can implement high-speed modem functions.

Figure 4–11. High-Speed V.32bis and Multistandard Modem With the TLC320AC01 AIC

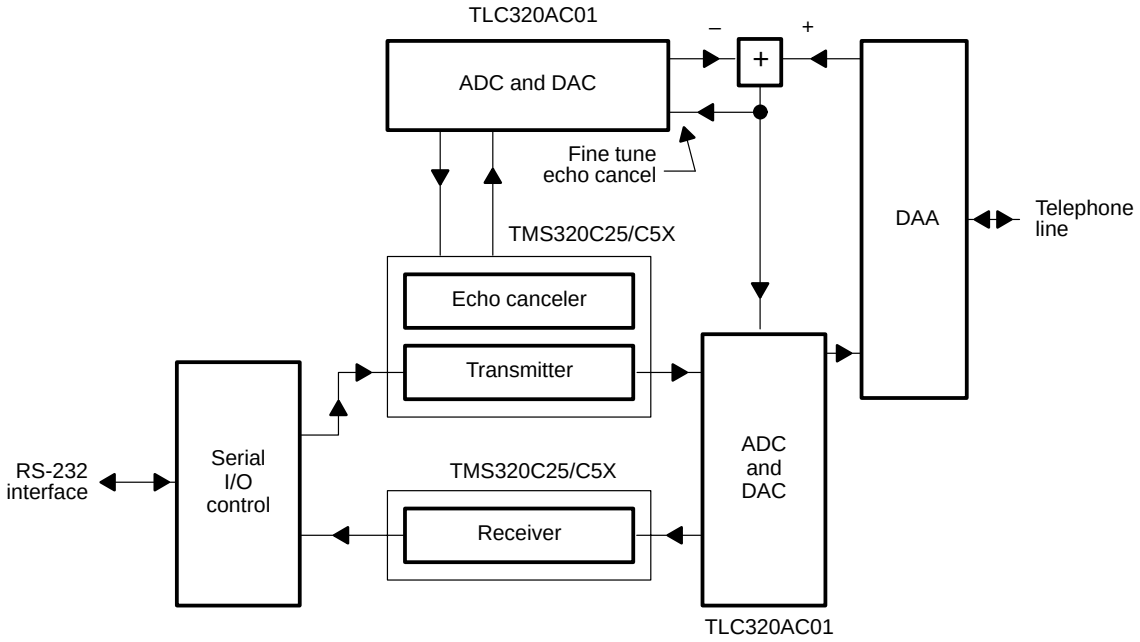

4.6 Advanced Digital Electronics Applications for Consumers

With the extensive use of the TMS320 DSPs in consumer electronics, much electromechanical control and signal processing can be done in the digital domain. Digital systems generally require some form of analog interface, usually in the form of high-performance ADCs and DACs. Figure 4–12 shows the general performance requirements for a variety of applications.

Figure 4–12. Applications Performance Requirements

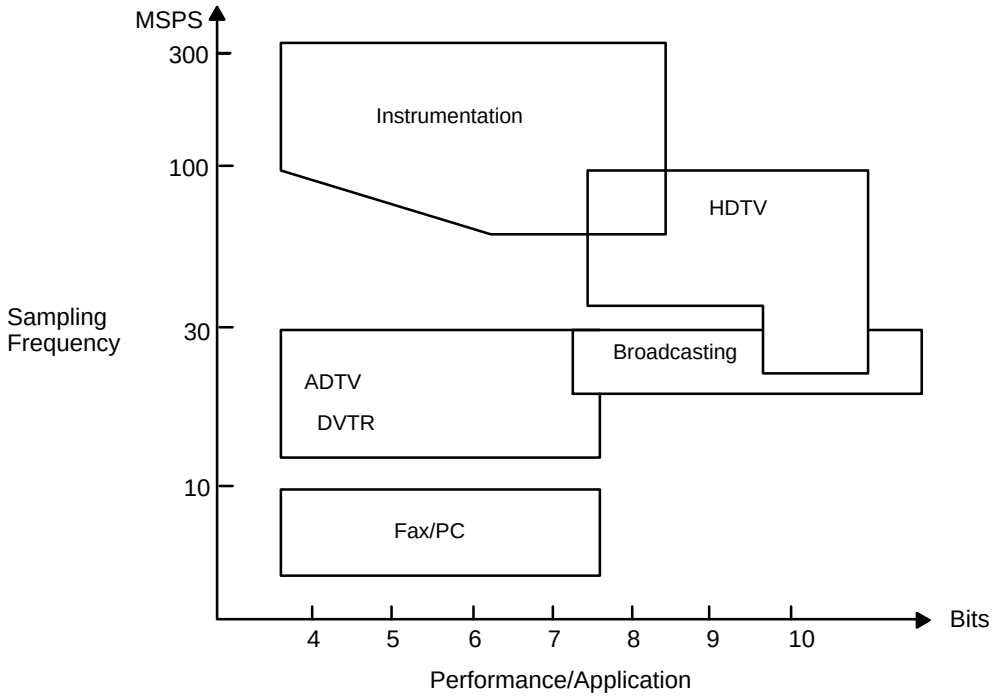

4.6.1 Advanced Television System Design Considerations

Advanced Digital Television (ADTV) is a technology that uses digital signal processing to enhance video and audio presentations and to reduce noise and ghosting. Because of these DSP techniques, a variety of features can be implemented, including frame store, picture-in-picture, improved sound quality, and zoom. The bandwidth requirements remain at the existing 6-MHz television allocation. From the intermediate frequency (IF) output, the video signal is converted by an 8-bit video ADC. The digital output can be processed in the digital domain to provide noise reduction, interpolation or averaging for digitally increased sharpness, and higher quality audio. The DSP digital output is converted back to analog by a video DAC, as shown in Figure 4–13.

Figure 4–13. Video Signal Processing Basic System

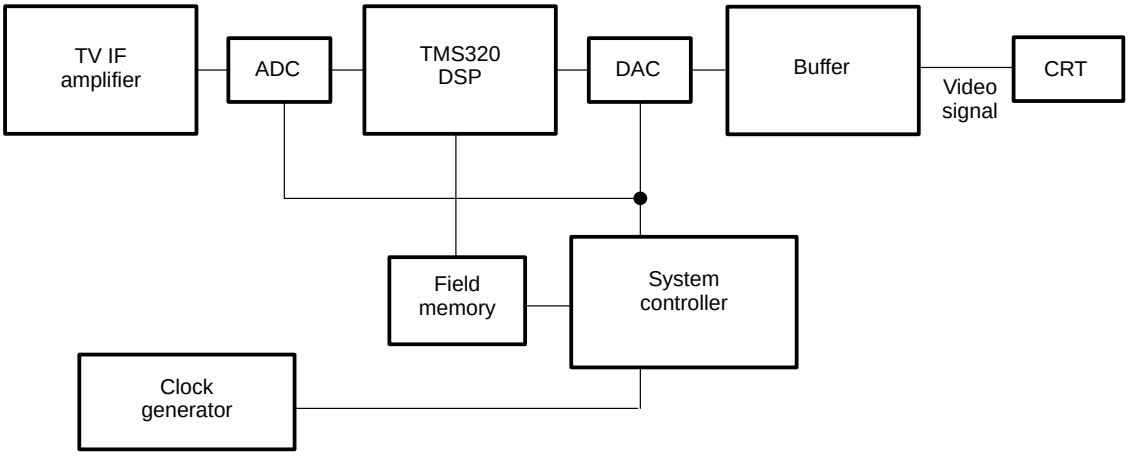

Videocassette recorders, compact disc (CD) players, digital audio tape (DAT) players, and PCs are a few of the products that have taken a major position in the marketplace in the last ten years. The audio channels for CD and DAT require 16-bit A/D resolution to meet the distortion and noise standards. See Figure 4–14 for a block diagram of a typical digital audio system.

The motion and motor control systems usually use 8- to 10-bit ADCs for the lower frequency servo loop. Tape or disc systems use motor or motion control for proper positioning of the record or playback heads. With the storage medium compressing data into an increasingly smaller physical size, the positioning systems require more precision.

The audio processing becomes more demanding as higher fidelity is required. Better fidelity translates into lower noise and distortion in the output signal.

Figure 4–14. Typical Digital Audio Implementation

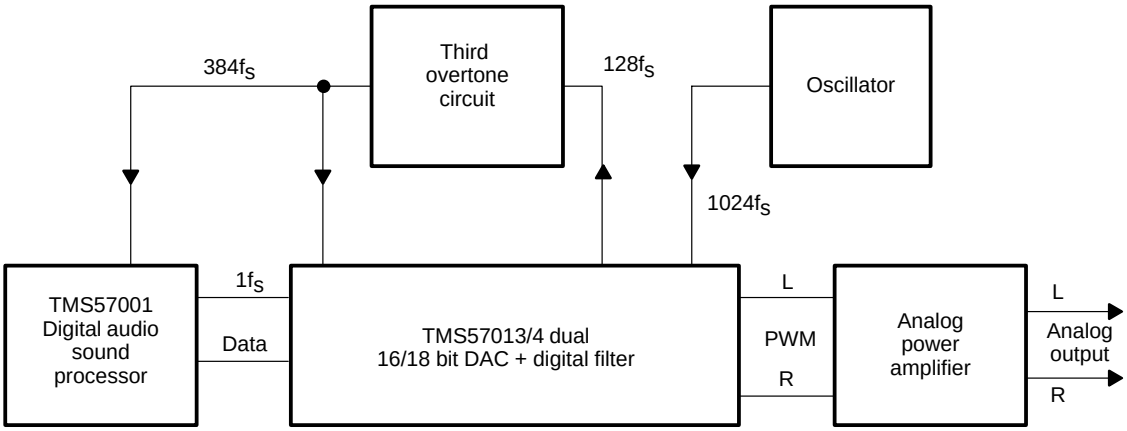

The TMS57013DW/57014DW 1-bit DACs include an 8-times over-sampling digital filter designed for digital audio systems, such as CD players, DAT players, CDIs, LDPs, digital amplifiers, car stereos, and BS tuners. They are also suitable for all systems that include digital sound processing like TVs, VCRs, musical instruments, NICAM systems, multimedia, and so forth.

The converters have dual channels so that the right and left stereo signals can be transformed into analog signals with only one chip. There are some functions that allow the customers to select the conditions according to their applications, such as muting, attenuation, deemphasis, and zero data detection. These functions are controlled by external 16-bit serial data from a controller like a microcomputer.

The TMS5703DW/57014DW adopt 129-tap FIR filter and third-order $\Delta\Sigma$ modulation to get –75-dB stop band attenuation and 96-dB signal-to-noise ratio (SNR). The output is a pulse-width modulated (PWM) waveform, which facilitates an analog signal through a low-pass filter.

4.6.2 Advanced Digital Electronics-Related Devices

As listed in Table 4–9, TI provides a complete array of analog interface devices. These devices support the TMS320 DSPs for digital system applications. For application assistance or additional information, call the Semiconductor Product Information Center (PIC) as listed in *If You Need Assistance* on page xvii.

Table 4–9. Audio/Video Analog/Digital Interface Devices

Function	Device	Bits	Speed	Channels	Interface
Dual audio DAC + digital filter	TMS57013/4	16/18	32, 37.8, 44.1, 48 kHz	2	Serial
Analog interface	TLC32071				
ADC		8	2 µs	8	Parallel
DAC		8	15 µs	1	Parallel
ADC	TLC1225	12	12 µs	1	Parallel
ADC	TLC1550	10	6 µs	1	Parallel
Flash ADC	TLC5502	8	50 ns	1	Parallel
Flash ADC	TLC5503	8	100 ns	1	Parallel
Triple video DAC	TL5632	8	16 ns	3	Parallel
Triple Flash ADC	TLC5703	8	70 ns	3	Parallel
Video DAC	TL5602	8	50 ns	1	Parallel
Video DAC	TLC5602	8	50 ns	1	Parallel

Appendix A

Design Considerations for Using XDS510 Emulator

The ’C5x DSPs support emulation through a dedicated emulation port. The emulation port is a superset of the IEEE JTAG standard 1149.1 and can be accessed by the XDS510 emulator. This appendix provides information pertaining to the XDS510 cable #2563988-001 revision B.

The term *JTAG,* as used in this book, refers to TI scan-based emulation, which is based on the IEEE standard 1149.1. For more information concerning the IEEE standard 1149.1, contact IEEE Customer Service:

Address: IEEE Customer Service
445 Hoes Lane, PO Box 1331
Piscataway, NJ 08855-1331

Phone: (800) 678–IEEE in the US and Canada
(908) 981–1393 outside the US and Canada

FAX: (908) 981–9667 Telex: 833233

Topic **Page**

A.1 Cable Header and Signals A-2
A.2 Bus Protocol A-3
A.3 Emulator Cable Pod A-4
A.4 Emulator Cable Pod Signal Timings A-6
A.5 Target System Test Clock A-7
A.6 Configuring Multiple Processors A-8
A.7 Connections Between the Emulator and the Target System A-9
A.8 Emulation Timing Calculations A-11

A.1 Cable Header and Signals

To perform emulation with the XDS510, your target system must have a 14-pin header (two 7-pin rows) with connections as shown in Figure A–1. Table A–1 describes the emulation signals. Although you can use other headers, recommended parts include:

Straight header, unshrouded	DuPont Electronics part number 67996–114
Right-angle header, unshrouded	DuPont Electronics part number 68405–114

Figure A–1. Header Signals and Header Dimensions

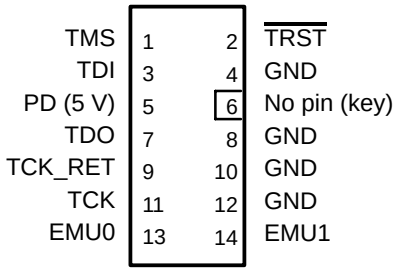

Header Dimensions:
Pin-to-pin spacing: 0.100 inch (X,Y)
Pin width: 0.025 inch square post
Pin length: 0.235 inch, nominal

Table A–1. XDS510 Header Signal Description

Pin	Signal	State	Target State	Description
1	TMS	O	I	JTAG test mode select
2	$\overline{\text{TRST}}$	O	I	JTAG test reset
3	TDI	O	I	JTAG test data input
5	PD	I	O	Presence detect. Indicates that the emulation cable is connected and that the target is powered up. PD must be tied to 5 volts in the target system.
7	TDO	I	O	JTAG test data output
9	TCK_RET	I	O	JTAG test clock return. Test clock input to the XDS510 emulator. May be a buffered or unbuffered version of TCK.
11	TCK	O	I	JTAG test clock. TCK is a 10-MHz clock source from the emulation cable pod. This signal can be used to drive the system test clock.
13	EMU0	I	I/O	Emulation pin 0
14	EMU1	I	I/O	Emulation pin 1

A.2 Bus Protocol

The IEEE standard 1149.1 covers the requirements for JTAG bus slave devices ('C5x) and provides certain rules, summarized as follows:

- The TMS and TDI inputs are sampled on the rising edge of the TCK signal of the device.
- The TDO output is clocked from the falling edge of the TCK signal of the device.

When JTAG devices are daisy-chained together, the TDO of one device has approximately a half TCK cycle setup time before the next device's TDI signal. This timing scheme minimizes race conditions that would occur if both TDO and TDI were timed from the same TCK edge. The penalty for this timing scheme is a reduced TCK frequency.

The IEEE standard 1149.1 does not provide rules for JTAG bus master (XDS510) devices. Instead, it states that it expects a bus master to provide bus-slave compatible timings. The XDS510 provides timings that meet the bus slave rules and also provides an optional timing mode that allows you to run the emulation at a much higher frequency for improved performance.

A.3 Emulator Cable Pod

Figure A–2 shows a portion of the XDS510 emulator cable pod. The functional features of the emulator pod are:

- TDO and TCK_RET can be parallel-terminated inside the pod if required by the application. By default, these signals are not terminated.
- TCK is driven with a 74AS1034 device. Because of the high-current drive (48 mA I_{OL}/I_{OH}), this signal can be parallel-terminated. If TCK is tied to TCK_RET, you can use the parallel terminator in the pod.
- TMS and TDI can be generated from the falling edge of TCK_RET, according to the IEEE (JTAG) standard 1149.1 bus-slave device timing rules. They can also be driven from the rising edge of TCK_RET, which allows a higher TCK_RET frequency. The default is to match the IEEE standard 1149.1 slave device timing rules. This is an emulator software option that can be selected when the emulator is invoked. In general, single-processor applications can benefit from the higher clock frequency. However, in multiprocessing applications, you may wish to use the IEEE standard 1149.1 bus slave timing mode to minimize emulation system timing constraints.
- TMS and TDI are series-terminated to reduce signal reflections.
- A 10-MHz test clock source is provided. You can also provide your own test clock for greater flexibility.

Figure A–2. Emulator Cable Pod Interface

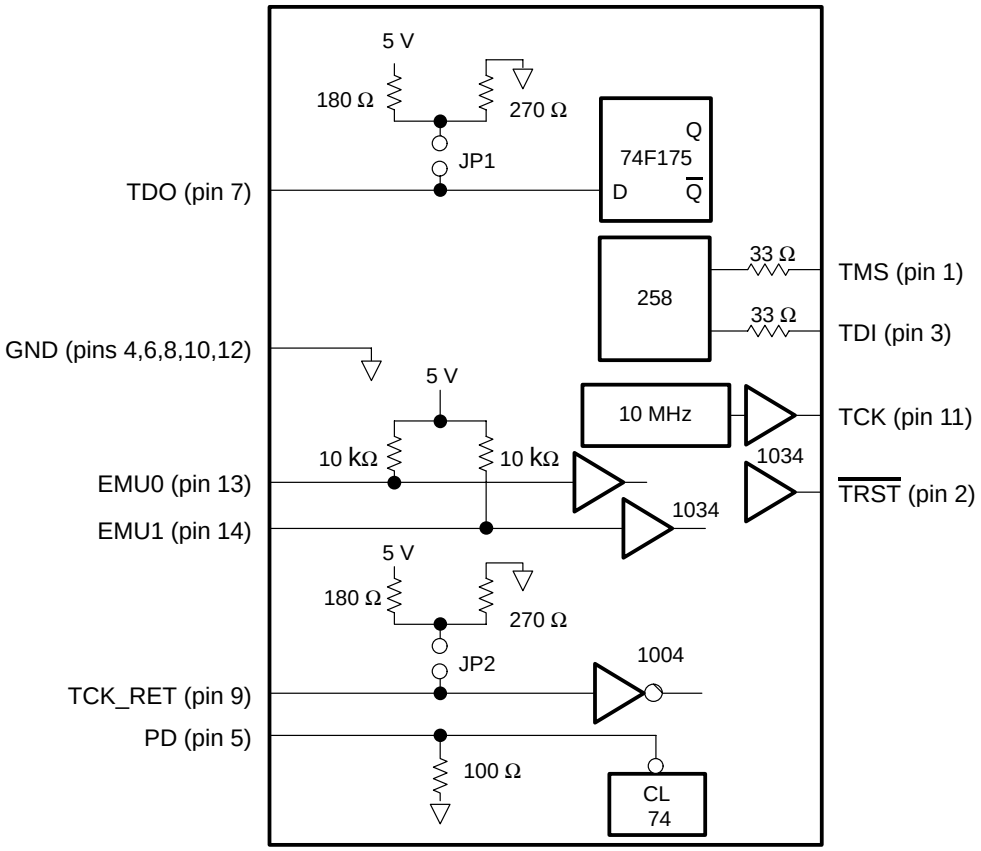

Note: All devices are 74AS, unless otherwise specified.

A.4 Emulator Cable Pod Signal Timings

Figure A–3 shows the signal timings for the emulator cable pod. Table A–2 defines the timing parameters illustrated in the figure. These timing parameters are calculated from values specified in the standard data sheets for the cable pod and are for reference only. Texas Instruments does not test or guarantee these timings.

The emulator pod uses TCK_RET as its clock source for internal synchronization. TCK is provided as an optional target system test clock source.

Figure A–3. Emulator Cable Pod Timings

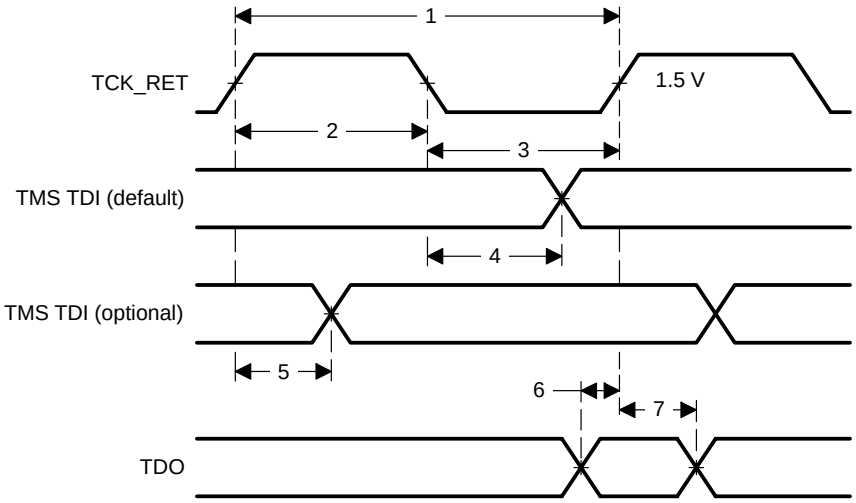

Table A–2. Emulator Cable Pod Timing Parameters

No.	Paramter	Description	Min	Max	Unit
1	t_{TCKmin} t_{TCKmax}	TCK_RET period	35	200	ns
2	$t_{TCKhighmin}$	TCK_RET high pulse duration	15		ns
3	$t_{TCKlowmin}$	TCK_RET low pulse duration	15		ns
4	$t_{d(XTMXmin)}$ $t_{d(XTMXmax)}$	TMS/TDI valid from TCK_RET low (default timing)	6	20	ns
5	$t_{d(XTMSmin)}$ $t_{d(XTMSmax)}$	TMS/TDI valid from TCK_RET high (optional timing)	7	24	ns
6	$t_{su(XTDOmin)}$	TDO setup time to TCK_RET high	3		ns
7	$t_{hd(XTDOmin)}$	TDO hold time from TCK_RET high	12		ns

A.5 Target System Test Clock

Figure A–4 shows an application with the system test clock generated in the target system. In this application the TCK signal is left unconnected. There are two benefits to having the target system generate the test clock:

1) You can set the test clock frequency to match your system requirements. The emulator provides only a single 10-MHz test clock.

2) You may have other devices in your system that require a test clock when the emulator is not connected.

Figure A–4. Target-System Generated Test Clock

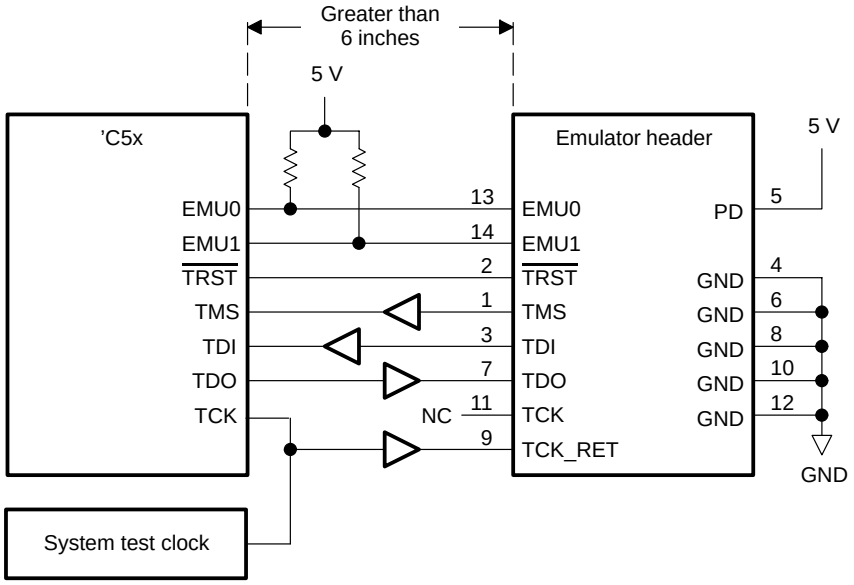

A.6 Configuring Multiple Processors

Figure A–5 shows a typical daisy-chained multiprocessor configuration that meets the minimum requirements of the IEEE (JTAG) standard 1149.1. The emulation signals are buffered to isolate the processors from the emulator and provide adequate signal drive for the target system. One of the benefits of this test interface is that you can slow down the test clock to eliminate timing problems. Several key points to multiprocessor support are as follows:

- The processor TMS, TDI, TDO, and TCK signals should be buffered through the same physical device package for better control of timing skew.
- The input buffers for TMS, TDI, and TCK should have pullup resistors connected to 5 V to hold these signals at a known value when the emulator is not connected. A pullup resistor value of 4.7 kΩ or greater is suggested.
- Buffering EMU0 and EMU1 is optional but highly recommended to provide isolation. These are not critical signals and do not have to be buffered through the same physical package as TMS, TCK, TDI, and TDO.

Figure A–5. Multiprocessor Connections

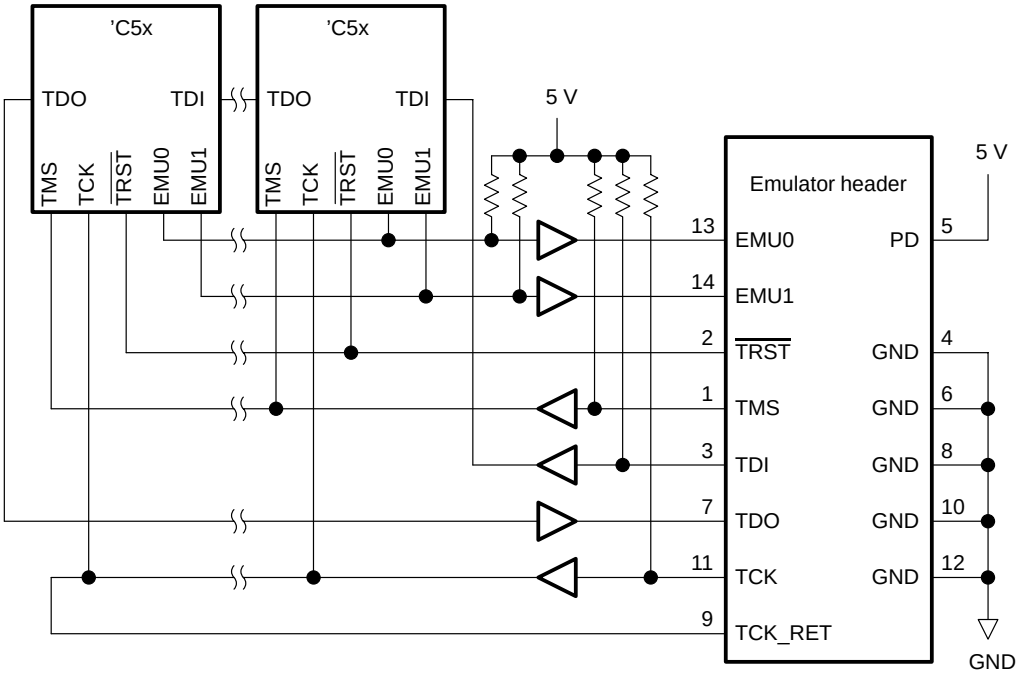

A.7 Connections Between the Emulator and the Target System

It is extremely important to provide high-quality signals between the emulator and the target system. You must supply the correct signal buffering, test clock inputs, and multiple processor interconnections to ensure proper emulator and target system operation.

EMU0 and EMU1 are I/O pins on the ’C5x; however, they are only inputs to the XDS510. In general, these pins are used in multiprocessor systems to provide global run/stop operations.

A.7.1 Emulation Signals Not Buffered

If the distance between the emulation header and the target device is less than 6 inches, no buffering is necessary. Figure A–6 shows the no-buffering configuration.

The EMU0 and EMU1 signals must have pullup resistors connected to 5 V to provide a signal rise time of less than 10 µs. A 4.7-kΩ resistor is suggested for most applications.

Figure A–6. Emulator Connections Without Signal Buffering

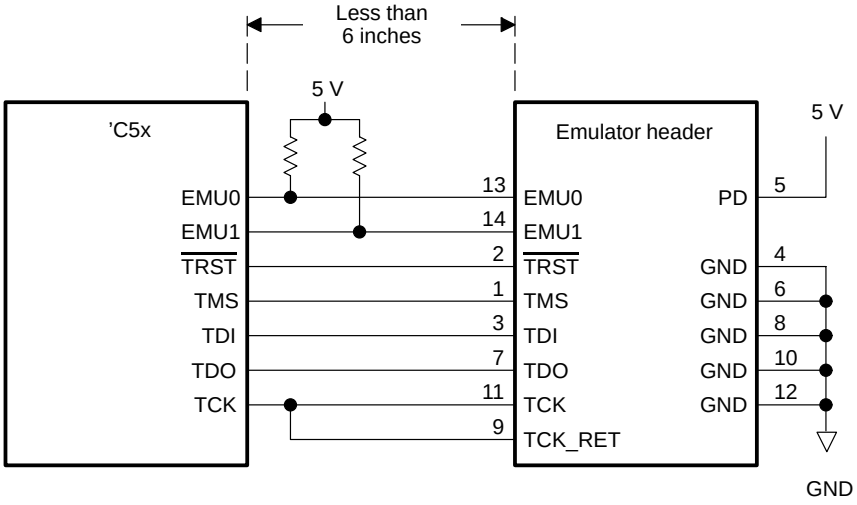

A.7.2 Emulation Signals Buffered

If the distance between the emulation header and the JTAG target device is greater than 6 inches, the emulation signals must be buffered. Figure A–7 shows the buffering configuration. Emulation signals TMS, TDI, TDO, and TCK_RET are buffered through the same device package.

The EMU0 and EMU1 signals must have pullup resistors connected to 5 V to provide a signal rise time of less than 10 µs. A 4.7-kΩ resistor is suggested for most applications.

To have high-quality signals (especially the processor TCK and the emulator TCK_RET signals), you may have to employ special care when routing the printed wiring board trace. You also may have to use termination resistors to match the trace impedance. The emulator pod provides optional internal parallel terminators on the TCK_RET and TDO. TMS and TDI provide fixed series termination.

Figure A–7. Buffered Signals

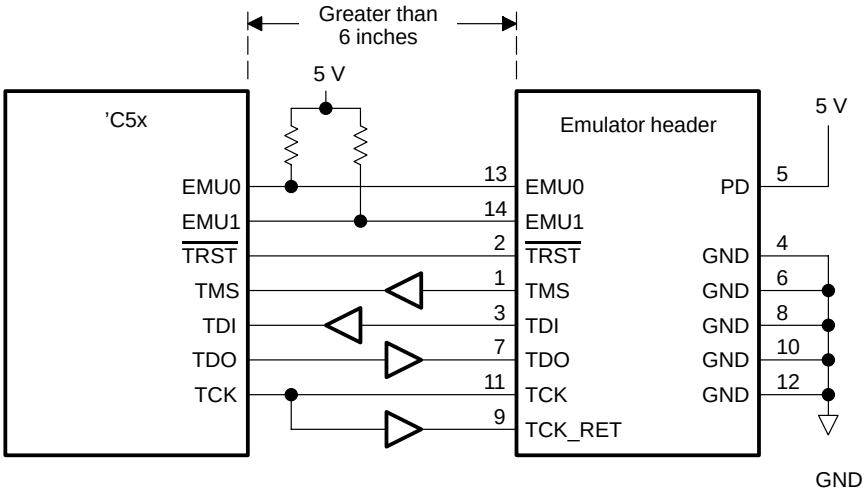

A.8 Emulation Timing Calculations

The following are a few examples of how to calculate the emulation timings in your system. For actual target timing parameters, see the appropriate device data sheets.

Assumptions:

$t_{su(TTMS)}$	Target TMS/TDI setup to TCK high	10 ns
$t_{h(TTMS)}$	Target TMS/TDI hold from TCK high	5 ns
$t_{d(TTDO)}$	Target TDO delay from TCK low	15 ns
$t_{d(bufmax)}$	Target buffer delay maximum	10 ns
$t_{d(bufmin)}$	Target buffer delay minimum	1 ns
$t(_{bufskew)}$	Target buffer skew between two devices in the same package: $[t_{d(bufmax)} - t_{d(bufmin)}] \times 0.15$	1.35 ns
$t_{tckfactor}$	A 40/60 duty cycle clock	0.4

Given in Table A–2 (page A-6):

$t_{d(XTMSmax)}$	XDS510 TMS/TDI delay from TCK_RET low, maximum	20 ns
$t_{d(XTMX)}$	XDS510 TMS/TDI delay from TCK_RET low, minimum	6 ns
$t_{d(XTMSmax)}$	XDS510 TMS/TDI delay from TCK_RET high, maximum	24 ns
$t_{d(XTMXmin)}$	XDS510 TMS/TDI delay from TCK_RET high, minimum	7 ns
$t_{su(XTDOmin)}$	TDO setup time to XDS510 TCK_RET high	3 ns

There are two key timing paths to consider in the emulation design:

1) The TCK_RET/TMS/TDI (t_{prdtck_TMS}) path
2) The TCK_RET/TDO (t_{prdtck_TDO}) path

In each case, the worst-case path delay is calculated to determine the maximum system test clock frequency.

Case 1: Single processor, direct connection, TMS/TDI timed from TCK_RET low (default timing).

$$t_{prdtck\_TMS} = [t_{(d(XTMSmax)} + t_{su(TTMS)}] / t_{tckfactor}$$
$$= (20\ ns + 10\ ns) / 0\ .4$$
$$= 75\ ns\ (13.3\ MHz)$$

$$t_{prdtck\_TDO} = [t_{(d(TTDO)} + t_{su(XTDOmin)}] / t_{tckfactor}$$
$$= (15\ ns + 3\ ns) / 0.4$$
$$= 45\ ns\ (22.2\ MHz)$$

In Case 1, the TCK/TMS path is the limiting factor.

Case 2: Single processor, direct connection, TMS/TDI timed from TCK_RET high (optional timing).

$$t_{prdtck\_TMS} = t_{d(XTMSmax)} + t_{su(TTMS)}$$
$$= (24\ ns + 10\ ns)$$
$$= 34\ ns\ (29.4\ MHz)$$

$$t_{prdtck\_TDO} = [t_{d(TTDO)} + t_{su(XTDOmin)}] / t_{tckfactor}$$
$$= (15 + 3) / 0.4$$
$$= 45\ ns\ (22.2\ MHz)$$

In Case 2, the TCK/TDO path is the limiting factor. One other thing to consider in this case is the TMS/TDI hold time. The minimum hold time for the XDS510 cable pod is 7 ns, which meets the 5-ns hold time of the target device.

Case 3: Single/multiple processor, TMS/TDI buffered input; TCK_RET/TDO buffered output, TMS/TDI timed from TCK_RET high (optional timing).

$$t_{prdtck\_TMS} = t_{d(XTMSmax)} + t_{su(TTMS)} + 2t_{d(bufmax)}$$
$$= 24\ ns + 10\ ns + 2\ (10)$$
$$= 54\ ns\ (18.5\ MHz)$$

$$t_{prdtck\_TDO} = [t_{d(TTDO)} + t_{su(XTDOmin)} + t_{(bufskew)}] / t_{tckfactor}$$
$$= (15\ ns + 3\ ns + 1.35\ ns) / 0.4$$
$$= 58.4\ ns\ \ (20.7\ MHz)$$

In Case 3, the TCK/TMS path is the limiting factor. The hold time on TMS/TDI is also reduced by the buffer skew (1.35 ns) but still meets the minimum device hold time.

Case 4: Single/multiprocessor, TMS/TDI/TCK buffered input; TDO buffered output, TMS/TDI timed from TCK_RET low (default timing).

$$t_{prdtck\_TMS} = [t_{d(XTMSmax)} + t_{su(TTMS)} + t_{bufskew}] / t_{ckfactor}$$
$$= (24\ ns + 10\ ns + 1.35\ ns) / 0.4$$
$$= 88.4\ ns\ (11.3\ MHz)$$

$$t_{prdtck\_TDO} = [t_{d(TTDO)} + t_{su(XTDOmin)} + t_{d(bufmax)}] / t_{ckfactor}$$
$$= (15\ ns + 3\ ns + 10\ ns) / 0.4$$
$$= 70\ ns\ (14.3\ MHz)$$

In Case 4, the TCK/TMS path is the limiting factor.

In a multiprocessor application, it is necessary to ensure that the EMU0 and EMU1 lines can go from a logic low level to a logic high level in less than 10 µs. This can be calculated as follows (remember that t = 5 RC):

$$t_{rise} = 5(R_{pullup} \times N_{devices} \times C_{load\_per\_device})$$
$$= 5(4.7\ k\Omega \times 16 \times 15\ pF)$$
$$= 5.64\ \mu s$$

Appendix B

Development Support and Part Order Information

This appendix provides development support information, device part numbers, and support tool ordering information for the ’C5x.

Each ’C5x support product is described in the *TMS320 DSP Development Support Reference Guide*. In addition, more than 100 third-party developers offer products that support the TI TMS320 family. For more information, refer to the *TMS320 Third-Party Support Reference Guide*.

For information on pricing and availability, contact the nearest TI Field Sales Office or authorized distributor. See the list at the back of this book.

Topic **Page**

B.1 Development Support B-2

B.2 Part Order Information B-4

B.3 Hewlett-Packard E2442A Preprocessor ’C5x Interface B-8

B.1 Development Support

This section describes the development support provided by Texas Instruments.

B.1.1 Software and Hardware Development Tools

TI offers an extensive line of development tools for the ’C5x generation of DSPs, including tools to evaluate the performance of the processors, generate code, develop algorithm implementations, and fully integrate and debug software and hardware modules. The following products support development of ’C5x-based applications:

- Software development tools:
  - Assembler/linker
  - Simulator
  - Optimizing ANSI C compiler
  - Application algorithms
  - C/Assembly debugger and code profiler
- Hardware development tools:
  - Emulator XDS510
  - ’C5x Evaluation Module (EVM)
  - ’C5x DSP Starter Kit (DSK)

B.1.2 Third-Party Support

The TMS320 family is supported by products and services from more than 100 independent third-party vendors and consultants. These support products take various forms (both as software and hardware), from cross-assemblers, simulators, and DSP utility packages to logic analyzers and emulators. The expertise of those involved in support services ranges from speech encoding and vector quantization to software/hardware design and system analysis.

To ask about third-party services, products, applications, and algorithm development packages, contact the third party directly. Refer to the *TMS320 Third-Party Support Reference Guide* for addresses and phone numbers.

B.1.3 TMS320C5x DSP Design Workshop

This workshop is tailored for hardware and software design engineers and decision-makers who design and utilize the ’C5x generation of DSP devices. Hands-on exercises throughout the course give participants a rapid start in developing ’C5x design skills. Microprocessor/assembly language experience is required. Experience with digital design techniques and C language programming experience is desirable.

These topics are covered in the ’C5x workshop:

- DSP fundamentals
- ’C5x architecture/instruction set
- Use of the PC-based software simulator
- Use of the ’C5x assembler/linker
- C programming environment
- System architecture considerations
- Memory and I/O interfacing
- Serial ports and multiple processor features

For registration information, pricing, or to enroll, call (972) 644–5580.

B.1.4 Assistance

For assistance to TMS320 questions on device problems, development tools, documentation, software upgrades, and new products, you can contact TI. See *If You Need Assistance* on page xvii for information.

B.2 Part Order Information

This section describes the part numbers of 'C5x devices, development support hardware, and software tools.

B.2.1 Device and Development Support Tool Nomenclature

To designate the stages in the product development cycle, TI assigns prefixes to the part numbers of all TMS320 devices and support tools. Each TMS320 member has one of three prefix designators: TMX, TMP, or TMS. Each support tool has one of two possible prefix designators: TMDX or TMDS. These prefixes represent evolutionary stages of product development, from engineering prototypes (TMX/TMDX) through fully qualified production devices and tools (TMS/TMDS). This development flow is defined below.

Device Development Flow:

TMX The part is an experimental device that is not necessarily representative of the final device's electrical specifications.

TMP The part is a device from a final silicon die that conforms to the device's electrical specifications but has not completed quality and reliability verification.

TMS The part is a fully qualified production device.

Support Tool Development Flow:

TMDX The development-support product that has not yet completed Texas Instruments internal qualification testing.

TMDS The development-support product is a fully qualified development support product.

TMX and TMP devices, and TMDX development-support tools are shipped with the following disclaimer:

"Developmental product is intended for internal evaluation purposes."

TMS devices and TMDS development-support tools have been fully characterized, and the quality and reliability of the device has been fully demonstrated. Texas Instruments standard warranty applies to these products.

Note:

It is expected that prototype devices (TMX or TMP) have a greater failure rate than standard production devices. Texas Instruments recommends that these devices *not* be used in any production system, because their expected end-use failure rate is still undefined. Only qualified production devices should be used.

B.2.2 Device Nomenclature

TI device nomenclature includes the device family name and a suffix. Figure B–1 provides a legend for reading the complete device name for any TMS320C5x family member.

Figure B–1. TMS320C5x Device Nomenclature

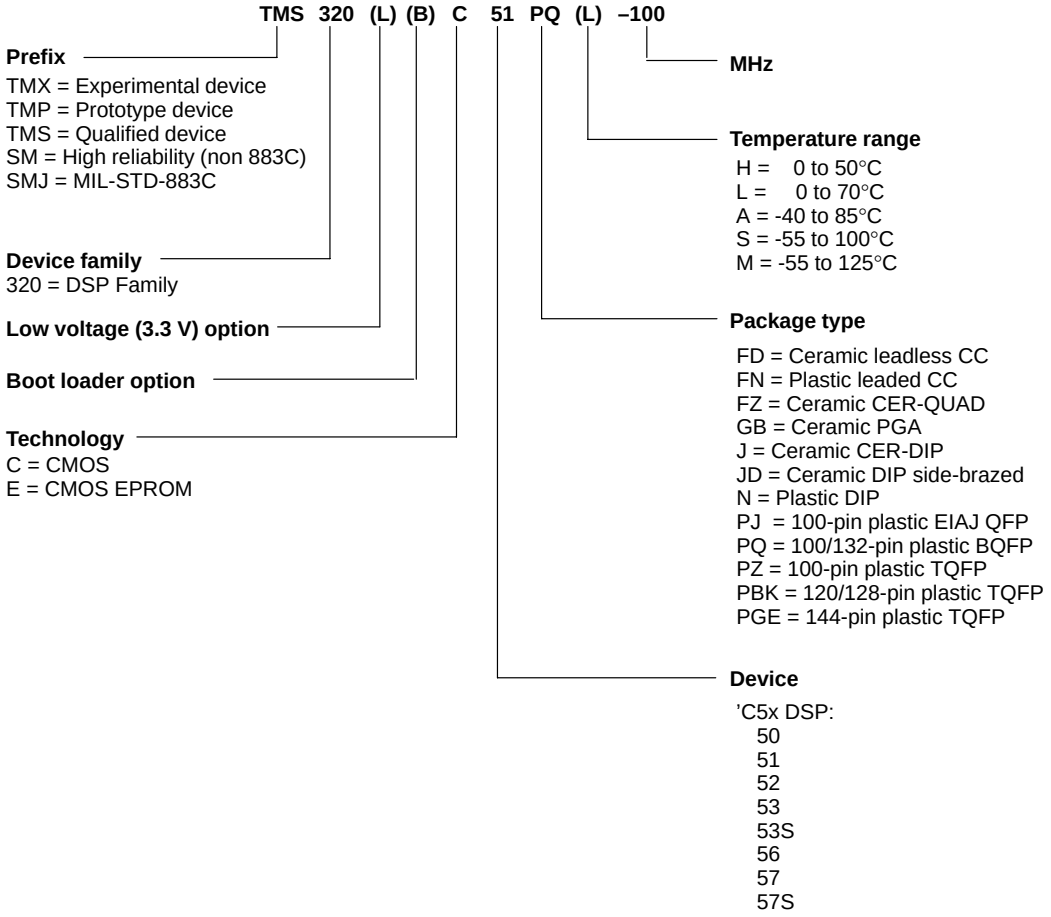

B.2.3 Development Support Tools

Figure B–2 provides a legend for reading the part number for any TMS320 hardware or software development tool. Table B–1 lists the development support tools available for the ’C5x, the platform on which they run, and their part numbers.

Figure B–2. TMS320 Development Tool Nomenclature

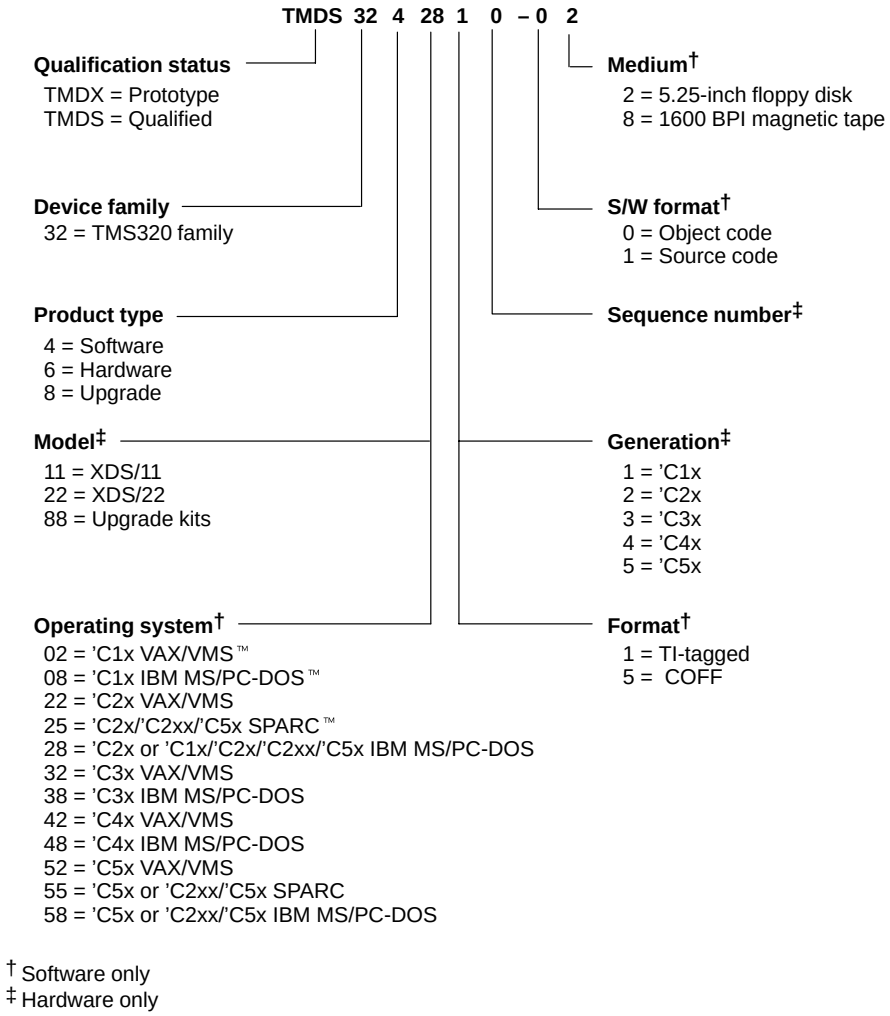

† Software only
‡ Hardware only

Table B–1. TMS320C5x Development Support Tools Part Numbers

Development Tool	Platform	Part Number
Assembler/linker	PC (DOS, OS/2)	TMDS3242850-02
C Compiler/assembler/linker	PC (DOS, OS/2)	TMDS3242855-02
C Compiler/assembler/linker	HP (HP-UX) / SPARC (Sun OS)	TMDS3242555-08
Digital Filter Design Package	PC (DOS)	DFDP
DSP Starter Kit (DSK)	PC (DOS)	TMDS3200051
Evaluation Module (EVM)	PC (DOS, Windows 3.xx)	TMDS3260050
Simulator (C language)	PC (DOS, Windows 3.xx)	TMDS3245851-02
Simulator (C language)	SPARC (Sun OS)	TMDS3245551-09
XDS510 debugger/emulation software	PC (DOS, Windows 3.xx, OS/2)	TMDS3240150
XDS510xl emulator†	PC (DOS, OS/2)	TMDS00510
XDS510WS debugger/emulation software	SPARC (Sun OS)	TMDS3240650
XDS510WS emulator‡	SPARC (Sun OS)	TMDS00510WS
3 V/5 V PC/SPARC JTAG emulation cable	XDS510 / XDS510WS	TMDS3080002

† Includes XDS510 board and JTAG cable
‡ Includes XDS510WS box and JTAG cable

B.3 Hewlett-Packard E2442A Preprocessor ’C5x Interface

The Hewlett-Packard E2442A preprocessor ’C5x interface provides a mechanical and electrical connection between your target system and an HP logic analyzer. Preprocessor hardware captures processor signals and passes them to the logic analyzer at the appropriate time, depending on the type of measurement you are making. With the preprocessor plugged in, both state and timing analysis is available. Two connectors are loaded onto the preprocessor to facilitate communications with other debugging tools. A BNC connector, when used with the sequencer of the logic analyzer halts the processor on a condition. Then you can use the ’C5x HLL debugger to examine the state of the system (for example, microprocessor registers). Likewise, a 14-pin connector is available to receive signals from the XDS510 development system. These signals can be used when defining a trigger condition for the analyzer.

The preprocessor includes software that automatically labels address, data, and status lines. Additionally, a disassembler is included. The disassembler processes state traces and displays the information on TMS320 mnemonics.

B.3.1 Capabilities

The preprocessor supports three modes of operation: in the first mode, *state per transfer,* the preprocessor clocks the logic analyzer only when a bus transfer is complete. In this mode, wait and halt states are filtered out. In the second mode, CLKOUT1 clocks the logic analyzer every time the microprocessor is clocked. This mode captures all bus states. An example application would be to locate memory locations that do not respond to requests for data. In the third mode, you can use the preprocessor to make timing measurements.

The JTAG TAP (test access port) controller can be monitored in realtime. TAP state can be viewed under the predefined label *TAP.*

B.3.2 Logic Analyzers Supported

The preprocessor ’C5x interface supports the following logic analyzers:

- HP 1650A/B
- HP 16510B
- HP 16511B
- HP 16540/41(A/D)
- HP 16550A
- HP 1660A/61A/62A

B.3.3 Pods Required

There are eight pod connectors on the preprocessor. Three are terminated and best used for state analysis, as all signals needed for disassembly are available. The other five connectors are not terminated and contain all processor signals, including a second set of the signals needed for disassembly. This allows you to double probe these signals, making simultaneous state and timing measurements.

B.3.4 Termination Adapters (TAs)

Of the eight pods, three are terminated. You may need to order up to five termination adapters, depending on how many pods are connected at the same time.

B.3.5 Availability

For more information and availability of the Hewlett-Packard E2442A, contact:

Hewlett-Packard Company
2000 South Park Place
Atlanta, GA 30339
(404) 980–7351

Appendix C

Application Reports and Designer's Notebook Pages

This appendix lists the TMS320C5x application reports in Table C–1 and the TMS320C5x designer's notebook pages (DNP) in Table C–2 available to you. To obtain a copy of any application report, call the Texas Instruments Literature Response Center at (800) 477–8924. When ordering, please identify the book by its title and literature number. To view a copy of any designer's notebook pages, refer to the world-wide web site at:

http://www.ti.com/sc/docs/dsps/dnp/pdftoc.htm.

Table C–1. TMS320C5x Application Reports

Application Report Literature Number	Title
SPRA030	Calculation of TMS320C5x Power Dissipation
SPRA033	Telecommunications Applications With the TMS320C5x DSPs
SPRA052	PCMCIA TMS320 DSP Media Card
SPRA054	Use of the TMS320C5x Internal Oscillator With External Crystals or Ceramic Resonators
SPRA057	Enhanced Control of an Alternating Current Motor Using Fuzzy Logic and a TMS320 Digital Signal Processor
SPRA085	Improving 32-Channel DTMF Decoders Using the TMS320C5x

Table C–2. TMS320C5x Designer's Notebook Pages

DNP Number	Title
4	Optimizing Control Algorithms on 'C5x
6	'C5x EVM Provides for Audio Processing
10	Initializing the Fixed-Point EVM's AIC
15	Efficient Coding on the TMS320C5x
19	Dual-Access Into Single-Access RAM on a 'C5x Device
21	TMS320C5x Interrupts
24	TMS320C5x Interrupt Response Time
25	TMS320C2x/C5x EVM AIC Initialization and Configuration
35	TMS320C5x Interrupts and the Pipeline
39	Bootload of C Code for the TMS320C5x
41	Supporting External DMA Activity to Internal RAM for TMS320C5x
42	Binary Search Algorithm on the TMS320C5x
43	Random Number Generation on a TMS320C5x
45	Fast TMS320C5x External Memory Interface
46	TMS320C5x Memory Paging (Expanding its Address Reach)
47	TMS320C5x Clock Modes
48	TMS320C5x Wait States
49	Clocking Options on the TMS320C5x
50	TMS320C5x DSK Analog I/O
54	Accessing TMS320C5x Memory-Mapped Register in C–C5xREGS.H
55	C Routines for Setting Up the AIC on the TMS320C5x EVM
57	Initializing the TMS320C5x DSK Board
59	Designing Macros for the TMS320C5x
63	Shared Memory Interface with a TMS320C5x DSP
65	Interfacing External Memory to the TMS320C5x DSK
66	Interfacing a TMS320C2x, 'C2xx, 'C5x DSP to a TLC548 8-bit A/D Convertor

Table C–2. TMS320C5x Designer's Notebook Pages (Continued)

DNP Number	Title
67	Interfacing a TMS320C2x, 'C2xx, 'C5x DSP to an 8-bit Boot EEPROM
68	Using the Circular Buffer on the TMS320C5x
72	Interfacing Two Analog Interface Circuits to One TMS320C5x Serial Port
74	Reading a 16-bit Bus With the TMS320C5x Serial Port
76	Interfacing 20-MSPS TLC5510 Flash A/D Converter to TMS320C2xx and TMS320C5x Fixed-Point DSPs
77	IDLE2 Instruction on a TMS320C51 When Using a Divide-by-One Clock Option
78	Initializing the TLC32046 AIC on the TMS320C5x EVM Board
79	Initializing the TLC320040 AIC on the TMS320C5x DSK
81	Setting up and Simulating Interrupts on the TMS320C5x

Index

A

adaptive filtering 2-49 to 2-51
ADC devices 4-20
ADTV 4-18
analog interface
  converters 4-4
  peripherals 4-1
application reports C-1
application-oriented operations 2-46 to 2-56
  adaptive filtering 2-49
  dynamic programming 2-55
  infinite impulse response (IIR) filtering 2-52
  modem application 2-46
applications 1-4
architecture 1-5
arithmetic
  extended-precision 2-26
  floating-point 2-39
assistance B-3

B

backtracking algorithm 2-56
BCND example 2-13
bit-reversed addressing 2-61
BLDD example 2-21
BLDP example 2-21
block moves 2-20 to 2-22
block repeat 2-20
BLPD example 2-21
boot loader 3-2
BSAR example 2-44
buffered signals, JTAG A-10
buffers, circular 2-17
bus protocol A-3

C

C bit 2-26, 2-29
’C14 to TLC32071 interface 4-13
’C25 to TLC32047 interfacing 4-3
’C5x
  applications 1-4
  characteristics 1-6
  key features 1-7
  overview 1-5
cable, target system to emulator A-1 to A-14
circular buffer registers 2-17 to 2-19
combo interface timing 4-8
consumer electronics 4-18 to 4-20
context save/restore 2-6
context switching 2-6
CRGT example 2-14, 2-15
CRLT example 2-14, 2-15

D

DAC devices 4-20
data memory interface 3-4, 3-6
delayed branches 2-24
designer’s notebook pages C-2
development tool nomenclature B-6
development tools B-2
device nomenclature B-5
digital audio 4-19
digital electronics applications 4-18
  advanced television system design 4-18
  digital electronics-related devices 4-20
direct memory access 3-7
$\overline{\text{DS}}$ pin 3-4

dynamic bit manipulation register (DBMR) 2-9
dynamic programming 2-55 to 2-70

E

emulator A-1
  buffered signals A-10
  bus protocol A-3
  cable header A-2
  cable pod A-4
  designing the JTAG cable A-2
  header signals A-2
  signal buffering A-9 to A-10
  signal timings A-6
  timing A-11
  timings A-6
  unbuffered signals A-9
emulator cable pod, interface A-5
extended-precision arithmetic 2-26 to 2-38
  addition 2-26 to 2-28
  division 2-35 to 2-46
  multiplication 2-30 to 2-34
  subtraction 2-29 to 2-30
external interfacing
  global data memory 3-6
  I/O space 3-6
  local data memory 3-4
  program memory 3-2
external memory interface 3-2, 3-4, 3-5

F

fast Fourier transforms (FFT) 2-57 to 2-70
filters
  adaptive 2-49
  FIR 2-50
  IIR 2-52 to 2-54
  switched capacitor 4-4
floating-point, arithmetic 2-39 to 2-45
fractional division 2-35 to 2-37

G

global data memory, external interfacing 3-6
global memory allocation register (GREG) 3-6

H

hardware development tools B-2, B-7
hardware stack 2-5
Harvard architecture 1-5
HDTV 4-18
Hewlett-Packard interface B-8

I

I/O, external interfacing 3-6
I/O space, external interfacing 3-6
IACK pin 3-2
IEEE 1149.1 A-3
infinite impulse response (IIR) filtering 2-52 to 2-54
initialization, processor 2-2
initialization routine 2-69
instruction conditions
  branch 2-12
  call 2-12
  return 2-12
integer division 2-35 to 2-37
interfacing memories
  EPROM 3-3
  global data memory 3-6
  RAM 3-4, 3-5
interrupt service routine (ISR) 2-5
interrupt trap 2-5
interrupts 2-5 to 2-7
INTR example 2-6
introduction 1-1
  TMS320 family overview 1-2
  TMS320C5x key features 1-7
  TMS320C5x overview 1-5

J

JTAG A-1
  signals A-3
JTAG emulator
  buffered signals A-10
  connection to target system A-1 to A-14
  no signal buffering A-9

K

key features 1-7 to 1-9

L

LMMR example 2-23
local data memory, external interfacing 3-4, 3-5
logical and arithmetic operations 2-9 to 2-16
  matrix multiplication 2-14
  multiconditional branch 2-12 to 2-13
  parallel logic unit (PLU) 2-9 to 2-11
  search algorithm 2-14
LTD example 2-54

M

MACD example 2-53
matrix multiplication 2-14
memory interface 3-2, 3-4
modem AFE data converters 4-15
modem application 2-46 to 2-48
modem applications 4-15
MPYA example 2-54
multiconditional branch 2-12
multimedia applications 4-2
  multimedia-related devices 4-4
  system design 4-2
multiplication
  16-bit algorithm 2-31
  32-bit algorithm 2-32
multiprocessor configuration A-8

N

nested loops 2-14, 2-16
nomenclature B-4, B-5

P

parallel logic unit (PLU) 2-9
part numbers, tools B-7
part-order information B-4
PC environment (DMA) 3-7
preprocessor interface B-8
processor initialization 2-2 to 2-4
program memory, external interfacing 3-2
$\overline{\text{PS}}$ pin 3-2

R

$\overline{\text{RD}}$ pin 3-2, 3-4
repeat counter register (RPTC) 2-20
repeat loops 2-20 to 2-23
RMS routine 2-24
RPT example 2-21, 2-22, 2-23
$\overline{\text{RS}}$ pin 2-2

S

SATH example 2-40
SATL example 2-40
search algorithm 2-14
seminars B-3
servo control-related devices 4-14
servo control/disk drive applications 4-12
  servo control/disk drive-related devices 4-14
  system design 4-12
shadow registers 2-5
signals
  buffered A-10
  buffering for emulator connections A-9 to A-10
SMMR example 2-22
software applications
  application-oriented operations 2-46
  circular buffers 2-17
  extended-precision arithmetic 2-26
  fast Fourier transforms (FFT) 2-57
  floating-point arithmetic 2-39
  interrupts 2-5
  logical and arithmetic operations 2-9
  processor initialization 2-2
  single-instruction repeat loops 2-20
  software stack 2-8
  subroutines 2-24
software development tools B-2, B-7
software stack 2-8
speech encoding 4-3
speech memories 4-11
speech synthesis applications 4-10
  speech synthesis-related devices 4-11
  system design 4-10
stack, hardware 2-5
status register 1 (ST1), C bit 2-26, 2-29
$\overline{\text{STRB}}$ pin 3-2, 3-4
SUBC example 2-37, 2-38

subroutines 2-24 to 2-25

support tools
- development B-6
- device B-6
- nomenclature B-4

T

target system, connection to emulator A-1 to A-14

target system clock A-7

TBLR example 2-22

TBLW example 2-22

technical training B-3

telecommunications applications 4-5
- DSP/combo interface 4-7
- system design 4-6
- telecommunications-related devices 4-8

third-party support B-2

timing
- combo interface 4-8
- emulator A-11

TMS320
- advantages 1-2
- development 1-2
- evolution 1-3
- family overview 1-2
- history 1-2
- roadmap 1-3
- typical applications 1-4

TMS320C5x
- applications 1-4
- characteristics 1-6
- key features 1-7
  - *compatibility 1-7*
  - *CPU 1-8*
  - *instruction set 1-8*
  - *memory 1-7*
  - *on-chip peripherals 1-9*
  - *packages 1-9*
  - *power 1-7*
  - *program control 1-8*
  - *speed 1-7*
  - *test/emulation 1-9*
- overview 1-5

tools, part numbers B-7

V

V.32 encoder example 2-47

video signal processing 4-19

voice synthesizers 4-10

W

$\overline{\text{WE}}$ pin 3-2, 3-4

workshops B-3

X

XC example 2-24

XDS510 emulator A-1 to A-14

IMPORTANT NOTICE

Texas Instruments (TI) reserves the right to make changes to its products or to discontinue any semiconductor product or service without notice, and advises its customers to obtain the latest version of relevant information to verify, before placing orders, that the information being relied on is current.

TI warrants performance of its semiconductor products and related software to the specifications applicable at the time of sale in accordance with TI's standard warranty. Testing and other quality control techniques are utilized to the extent TI deems necessary to support this warranty. Specific testing of all parameters of each device is not necessarily performed, except those mandated by government requirements.

Certain applications using semiconductor products may involve potential risks of death, personal injury, or severe property or environmental damage ("Critical Applications").

TI SEMICONDUCTOR PRODUCTS ARE NOT DESIGNED, INTENDED, AUTHORIZED, OR WARRANTED TO BE SUITABLE FOR USE IN LIFE-SUPPORT APPLICATIONS, DEVICES OR SYSTEMS OR OTHER CRITICAL APPLICATIONS.

Inclusion of TI products in such applications is understood to be fully at the risk of the customer. Use of TI products in such applications requires the written approval of an appropriate TI officer. Questions concerning potential risk applications should be directed to TI through a local SC sales office.

In order to minimize risks associated with the customer's applications, adequate design and operating safeguards should be provided by the customer to minimize inherent or procedural hazards.

TI assumes no liability for applications assistance, customer product design, software performance, or infringement of patents or services described herein. Nor does TI warrant or represent that any license, either express or implied, is granted under any patent right, copyright, mask work right, or other intellectual property right of TI covering or relating to any combination, machine, or process in which such semiconductor products or services might be or are used.

Copyright © 1996, Texas Instruments Incorporated